OPERATION MANUAL

FM/AM-1000S

COMMUNICATIONS SERVICE MONITOR

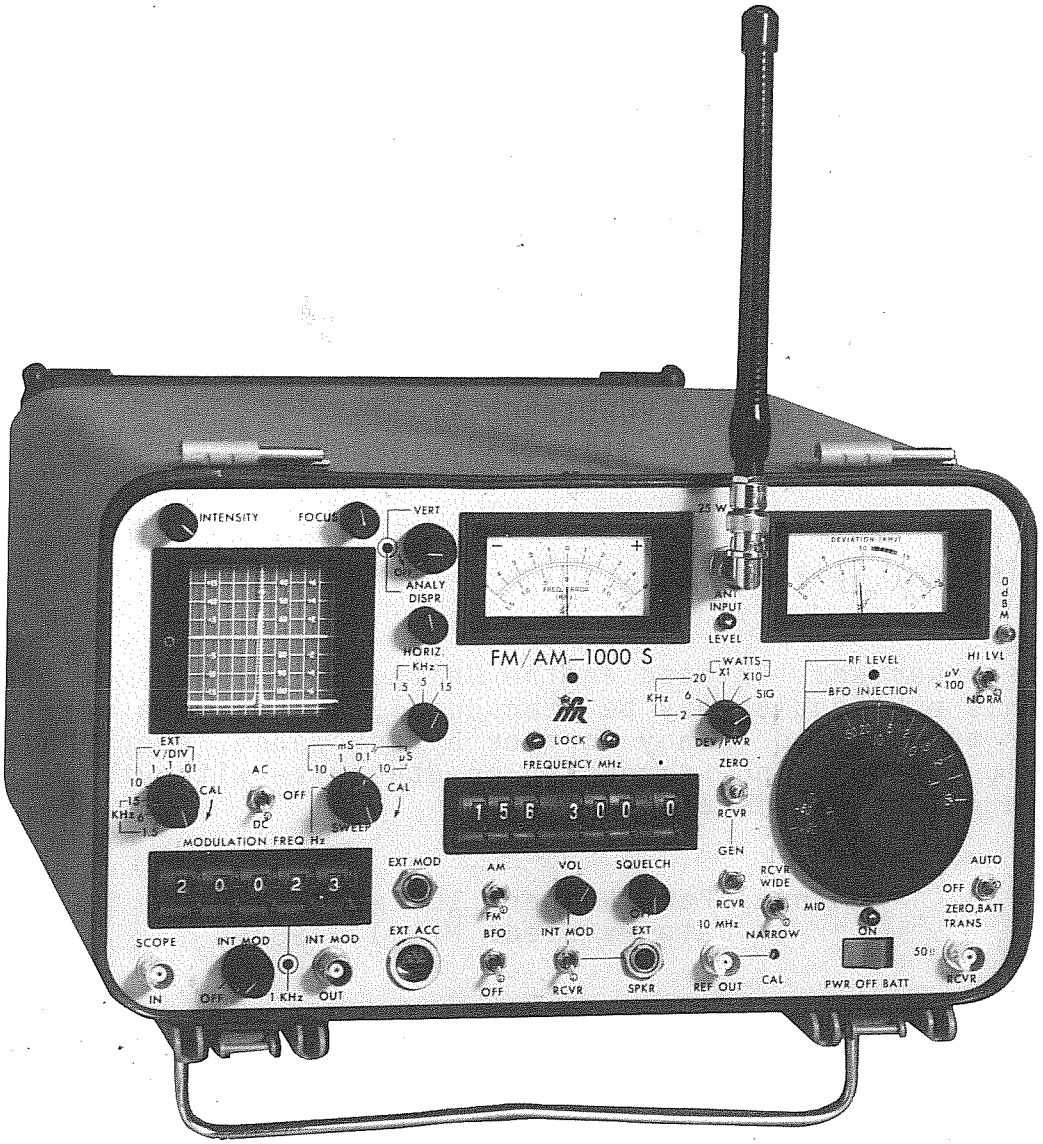

10200 West York Street/Wichita, Kansas 67215 U.S.A./(316) 522-4981/TWX 910-741-6952

PUBLISHED BY
IFR, INC.
Wichita, Kansas

Copyright © 1981 by IFR, INC.

All rights reserved. Printed in the United States of America. No part of this publication may be reproduced, stored in a retrieval system, or transmitted in any form or by any means, electronic, mechanical, photocopying, recording or otherwise without the prior permission of the publisher.

Manual Part Number: 1002-2381-400
Date Printed: May 1, 1981

NOTE

This manual part number 1002-2381-400 shall be used with FM/AM-1000S Operation Manual part number 1002-2381-200 and FM/AM-1000A Operation Manual part number 1002-2382-000.

LIST OF EFFECTIVE PAGES

The portion of text affected by the changes is indicated by a vertical line in the outer margin of the page. Changes to illustrations are indicated by revision letter. Changes to wiring diagrams are indicated by shaded areas.

Date of issue for original and changed pages are:

Original ..... 0 ..... May 1, 1981

TOTAL NUMBER OF PAGES IN THIS MANUAL IS 266 CONSISTING OF FOLLOWING:

Pg. No.	Change No.	Pg. No.	Change No.	Pg. No.	Change No.
Title Page	0	4-73 thru 4-85	0	5-25	0
Copyright Page	0	4-86 Blank	0	5-26 Blank	0
A	0	4-87 thru 4-89	0	5-27	0
B Blank	0	4-90 Blank	0	5-28 Blank	0
i thru xvi	0	4-91 thru 4-93	0	5-29	0
1-1	0	4-94 Blank	0	5-30 Blank	0
1-2 Blank	0	4-95 thru 4-111	0	5-31	0
2-1 thru 2-6	0	4-112 Blank	0	5-32 Blank	0
3-1 Blank	0	4-113 thru 4-121	0	5-33	0
3-2 thru 3-12	0	4-122 Blank	0	5-34 Blank	0
4-1 thru 4-9	0	4-123 thru 4-131	0	5-35	0
4-10 Blank	0	4-132 Blank	0	5-36 Blank	0
4-11 thru 4-15	0	4-133 thru 4-137	0	5-37	0
4-16 Blank	0	4-138 Blank	0	5-38 Blank	0
4-17	0	4-139 thru 4-143	0	A-1 thru A-5	0
4-18 Blank	0	4-144 Blank	0	A-6 Blank	0
4-19 thru 4-25	0	4-145 thru 4-153	0	B-1	0
4-26 Blank	0	4-154 Blank	0	B-2	0
4-27 thru 4-29	0	4-155 thru 4-163	0	C-1	0
4-30 Blank	0	4-164 Blank	0	C-2 Blank	0
4-31 thru 4-41	0	4-165	0	D-1	0
4-42 Blank	0	4-166	0	D-2	0
4-43 thru 4-49	0	5-1 thru 5-13	0	E-1 thru E-3	0
4-50 Blank	0	5-14 Blank	0	E-4 Blank	0
4-51 thru 4-59	0	5-15 thru 5-17	0	F-1	0
4-60 Blank	0	5-18 Blank	0	F-2	0
4-61 thru 4-67	0	5-19	0	G-1	0
4-68 Blank	0	5-20 Blank	0	G-2 Blank	0
4-69	0	5-21	0	H-1	0
4-70 Blank	0	5-22 Blank	0	H-2	0
4-71	0	5-23	0		
4-72 Blank	0	5-24 Blank	0		

Manual pages affected by current change are denoted by asterisk.

PREFACE

SCOPE:

This manual contains instructions for operating the FM/AM-1000S as a general purpose communications service monitor. The instruction level of this manual is relatively basic and presupposes no previous experience on the part of the operator with a communication serivce monitor of this type. A basic understanding, however, of communication electronics and practical troubleshooting methods will be helpful. It is strongly recommended that operator be thoroughly familiar with Sections 1 through 3 of this manual before attempting to perform any operating procedures contained in Section 4.

ORGANIZATION:

The operation manual is divided into the following major sections:

SECTION 1 - INTRODUCTION
Provides a brief introduction to the FM/AM-1000S including purpose, functional capabilities and uses.

SECTION 2 - INSTALLATION
Provides a step by step procedure for setting up the FM/AM-1000S for operation in either a mobile or test bench environment.

SECTION 3 - DESCRIPTION OF CONTROLS, CONNECTORS & INDICATORS
Identifies and functionally describes all FM/AM-1000S controls, connectors and indicators.

NOTE

- As an operating aid, Figure 3-1 (which locates and identifies all FM/AM-1000S front panel controls) has been incorporated into a fold-out page. By extending the fold-out page, the operator can easily reference any front panel control while simultaneously performing any operating procedure contained elsewhere in this manual.

SECTION 4 - OPERATION
Contains a selection of basic operating procedures pertaining to all major functions of the FM/AM-1000S, in addition to an assortment of common receiver and transmitter tests which can be performed using the FM/AM-1000S.

SECTION 5 - UUT RECEIVER TESTING
Contains logical flowcharts which provide operator with a systematic method of:

a. Aligning typical AM/FM receivers.

b. Locating and diagnosing most common malfunctions or breakdowns in typical AM/FM receivers.

Useful supplementary information relating to the operation of the FM/AM-1000S is contained in appendices at rear of manual. (See Table of Contents for detailed list of manual contents.)

SUPPLEMENTARY MANUALS

Refer to separate FM/AM-1000S Maintenance Manual for information on following topics:

FM/AM-1000S Theory of Operation
FM/AM-1000S Maintenance and Troubleshooting Procedures
FM/AM-1000S Illustrated Parts Catalog
FM/AM-1000S Assembly Drawings, PC Board Layouts and Schematics.

TABLE OF CONTENTS

Paragraph	Title	Page
	List of Effective Pages	A
	Preface	i
	List of Illustrations	ix
	SECTION 1 - INTRODUCTION	
1-1	General	1-1
1-2	Functional Capabilities	1-1
	SECTION 2 - INSTALLATION	
2-1	General	2-1
2-1-1	Safety Precautions	2-1
2-1-2	Equipment Inspection	2-2
2-1-3	Power Requirements	2-2
2-1-4	Installation Equipment	2-3
2-2	Installation Procedure	2-4
	SECTION 3 - DESCRIPTION OF CONTROLS, CONNECTORS & INDICATORS	
3-1	FM/AM-1000S Front Panel	3-1
3-2	FM/AM-1000S Rear Panel	3-12
	SECTION 4 - OPERATION	
4-1	General	4-1
4-1-1	Pre-operational Considerations	4-2
4-1-2	Operating Precautions	4-2

Paragraph	Title	Page
4-2	Test Procedures Using FM/AM-1000S Oscilloscope	4-3
4-2-1	General	4-4
4-2-2	Initial FM/AM-1000S Control Settings for Oscilloscope Operation	4-5
4-2-3	Measuring DC Voltages	4-7
4-2-4	Measuring Peak-to-Peak Voltages	4-11
4-2-5	Measuring RMS AC Voltages (Sine Wave Only)	4-15
4-2-6	Measuring Peak AC Voltages	4-17
4-2-7	Measuring Frequencies Between 5 Hz and 500 kHz	4-19
4-2-8	Measuring Pulse Duration and Duty Cycle	4-27
4-3	Test Procedures Using FM/AM-1000S Spectrum Analyzer	4-31
4-3-1	General	4-32
4-3-2	Initial FM/AM-1000S Control Settings for Spectrum Analyzer Operation	4-33
4-3-3	Measuring Signal Strength	4-35
4-3-4	Detecting Spurious Signals	4-39
4-4	Test Procedures Using FM/AM-1000S Dual Tone Generator	4-43
4-4-1	General	4-44
4-4-2	Initial FM/AM-1000S Control Settings for Dual Tone Generator Operation	4-45
4-4-3	Generating Audio Tones of Known Amplitude	4-47
4-4-4	Using FM/AM-1000S Speaker to Accoustically Excite a Microphone	4-49
4-5	Test Procedures Using FM/AM-1000S RF Generator	4-51

Paragraph	Title	Page
4-5-1	General	4-52
4-5-2	Initial FM/AM-1000S Control Settings for RF Generator Operation	4-53
4-5-3	Generating RF Signals	4-55
4-5-4	Generating AM Modulated RF Signals	4-57
4-5-5	Generating FM Modulated RF Signals	4-59
4-6	Test Procedures Using FM/AM-1000S Receiver	4-61
4-6-1	General	4-62
4-6-2	Initial FM/AM-1000S Control Settings for Receiver Operation	4-63
4-6-3	Receiving AM or FM Signals	4-65
4-6-4	Receiving Sideband Signals	4-69
4-6-5	Receiving CW Signals	4-71
4-6-6	Receiving Time Standard Signal to Calibrate FM/AM-1000S Master Oscillator	4-73
4-6-7	Calibrating FM/AM-1000S Master Oscillator Through an External Frequency Standard	4-75
4-7	Test Procedures Using FM/AM-1000S as a Sweep Generator/ Tracking Oscilloscope	4-77
4-7-1	General	4-78
4-7-2	Initial FM/AM-1000S Control Settings for Sweep Generator/ Tracking Oscilloscope Operation	4-79
4-7-3	Using FM/AM-1000S as a Sweep Generator/Tracking Oscilloscope	4-81
4-7-4	Measuring Bandpass and Center Frequency of a Bandpass Circuit	4-87
4-7-5	Measuring Bandreject and Center Frequency of Knotch Circuits	4-91

Paragraph	Title	Page
4-7-6	Measuring Cut-off Frequency of Lowpass Circuits	4-95
4-7-7	Measuring Cut-off Frequency of Highpass Circuits	4-101
4-8	General Receiver Tests	4-107
4-8-1	General	4-108
4-8-2	Oscillator Frequency Measurement	4-109
4-8-3	Measuring RF Section Bandpass and Center Frequency (For bandpasses less than 40 kHz)	4-113
4-8-4	Measuring Bandpass and Center Frequency of an IF Strip	4-119
4-8-5	Measuring Receiver Bandpass and Center Frequency (For bandpasses less than 40 kHz)	4-123
4-8-6	Measuring Receiver Bandpass and Center Frequency (For bandpasses greater than 40 kHz)	4-127
4-8-7	Measuring Squelch Threshold and Differential (For receivers with fixed squelch)	4-133
4-8-8	Measuring Squelch Threshold and Differential (For receivers with variable squelch)	4-135
4-8-9	Measuring AGC Action	4-139
4-8-10	Measuring AM Receiver Sensitivity	4-145
4-8-11	Measuring FM Receiver 20 dB Quieting	4-149
4-8-12	Measuring 12 dB Sinad Sensitivity	4-151
4-8-13	Measuring Maximum Receivable Deviation	4-153
4-9	General Transmitter Tests	4-155
4-9-1	General	4-156
4-9-2	Measuring Transmitter Carrier Power	4-157
4-9-3	Measuring Transmitter Frequency	4-159
4-9-4	Measuring AM Modulation of a Transmitter	4-161
4-9-5	Measuring Transmitter Deviation (Below ±20 kHz)	4-165

Paragraph	Title	Page

SECTION 5 - RECEIVER ALIGNMENT & TROUBLESHOOTING

5-1 General 5-1

5-1-1 Preliminary Considerations 5-1

5-1-2 Alignment/Troubleshooting Saftey Precautions 5-2

5-1-3 How to Use Alignment/Troubleshooting Flowcharts 5-3

5-2 Routine Maintenance Checklist 5-5

5-3 Receiver Alignment Flowchart 5-7

5-4 AM/FM Receiver Troubleshooting Flowcharts 5-11

5-4-1 Power Supply Troubleshooting Flowchart 5-11

5-4-2 Oscillator Troubleshooting Flowchart 5-15

5-4-3 RF Amplifier Troubleshooting Flowchart 5-19

5-4-4 IF Amplifier Troubleshooting Flowchart 5-21

5-4-5 Receiver Section Troubleshooting Flowchart 5-23

5-4-6 Squelch Troubleshooting Flowchart 5-25

5-4-7 AGC Troubleshooting Flowchart 5-27

5-4-8 AM Audio Troubleshooting Flowchart 5-29

5-4-9 Sensitivity Troubleshooting Flowchart 5-31

5-4-10 Squelch Enable Troubleshooting Flowchart 5-33

5-4-11 FM Audio Troubleshooting Flowchart 5-35

5-4-12 Maximum Receivable Deviation Troubleshooting Flowchart 5-37

Paragraph	Title	Page

APPENDICES

Appendix A Specifications A-1

Appendix B FM/AM-1000S Standard/Optional Accessories B-1

Appendix C dBm to Microvolt Conversion Chart C-1

Appendix D Repacking for Shipment D-1

Appendix E Sweep Generator/Tracking Oscilloscope Operation: Viewing Frequency Response Display Directly on Oscilloscope E-1

Appendix F Pinout/Contact Assignments for External Accessory and External Modulation Connectors F-1

Appendix G How to Construct an RF Pick-up ("Sniffer") Cable G-1

Appendix H Abbreviations & Symbols H-1

LIST OF ILLUSTRATIONS

Figure No.	Title	Page
2-1	Extending FM/AM-1000S Support Bracket	2-4
2-2	FM/AM-1000S Operating Position	2-4
2-3	Removing FM/AM-1000S Lid Retaining Plate	2-4
2-4	Removing FM/AM-1000S Accessories	2-5
2-5	FM/AM-1000S with Antenna Attached	2-5
2-6	Discharging Static Buildup from Antenna Coax	2-5
2-7	Connecting External AC or DC Power Cable to FM/AM-1000S	2-6
2-8	FM/AM-1000S Power Switch	2-6
3-1	FM/AM-1000S Front Panel	3-1
3-2	CRT Display Deviation Scales	3-8
3-3	FREQUENCY MHz Thumbwheels	3-8
3-4	CRT Display Graticule Markings	3-9
3-5	FM/AM-1000S Rear Panel	3-12
4-1	FM/AM-1000S Controls Applicable to Oscilloscope Operation	4-5
4-2	Scope Trace Centered over Major Horizontal Axis	4-7
4-3	Examples of DC Voltage Measurements	4-8
4-4	Stable Sine Wave Display	4-12
4-5	Negative Peaks of Sine Wave Display Resting on Horizontal Axis	4-12
4-6	Positive Peak of Waveform Centered over Major Vertical Axis	4-13

Figure No.	Title	Page
4-7	Measuring Peak-to-Peak Amplitude of Waveform	4-13
4-8	Examples of Closely Packed and Multiple Waveforms	4-20
4-9	Positive Going Zero Point of Waveform Aligned with Vertical Axis	4-21
4-10	Measuring Wavelength in Graticule Divisions	4-21
4-11	Solid Square Trace Area Displayed on CRT	4-22
4-12	Lissajou Figure Reference Chart	4-25
4-13	Typical Display of Pulse Waveform	4-28
4-14	Measuring "ON" Time of Pulse Waveform	4-28
4-15	Measuring PRT of Pulse Waveform	4-29
4-16	FM/AM-1000S Controls Applicable to Spectrum Analyzer Operation	4-33
4-17	Signal Under Test Displayed at Center Frequency	4-36
4-18	Signal Under Test Measured Along dB Scale of CRT	4-36
4-19	Signal Under Test Offset from Major Vertical Axis	4-37
4-20	Adjusting Injected BFO Signal to Same Amplitude of Signal Under Test	4-38
4-21	Typical Display of Carrier Signal and Adjacent Spurious Signal	4-40
4-22	FM/AM-1000S Controls Applicable to Dual Tone Generator Operation	4-45
4-23	Test Set-Up Diagram for Injecting Tone(s) of Known Amplitude Into a UUT	4-47
4-24	Amplitude of Displayed Waveform Adjusted 1 Volt Peak	4-48
4-25	FM/AM-1000S Controls Applicable to RF Generator Operation	4-53
4-26	Displayed Carrier Aligned with Lower Edge Resting on Major Horizontal Axis	4-57

Figure No.	Title	Page

4-27 Alignment of Upper and Lower Modulation Signals with Major Horizontal Axis 4-58

4-28 FM/AM-1000S Controls Applicable to Receiver Operation ... 4-63

4-29 Test Set-Up Diagram for Calibrating FM/AM-1000S Master Oscillator 4-75

4-30 FM/AM-1000S Controls Applicable to Sweep Generator/ Tracking Oscilloscope Operation 4-79

4-31 Test Set-Up Diagram for Sweep Generator/Tracking Oscilloscope Operation (Using Detector) 4-81

4-32 Test Set-Up Diagram for Sweep Generator/Tracking Oscilloscope (Using Detector Probe) 4-82

4-33 Dot Positioned 3 Graticule Divisions above or below Major Horizontal Axis, on Major Vertical Axis 4-83

4-34 Horizontal Trace Positioned 3 Graticule Divisions above or below Major Horizontal Axis, Centered over Major Vertical Axis 4-83

4-35 Peak of Displayed Waveform Resting on Major Horizonal Axis 4-84

4-36 Frequency Response Curve of CUT 4-84

4-37 Bandpass Response Curve Centered over Major Vertical Axis 4-87

4-38 Bandpass Response Curve with One Leg Resting on Major Horizontal Axis 4-88

4-39 Bandpass Response Curve with Legs Resting on Major Horizontal Axis 4-89

4-40 Bandreject Response Curve Centered over Major Vertical Axis 4-91

4-41 Bandreject Response Curve with One Leg Resting on Major Horizontal Axis 4-92

4-42 Bandreject Response Curve with Legs Resting on Major Horizontal Axis 4-93

Figure No.	Title	Page
4-43	Test Set-Up Diagram for Measuring Cut-off Frequency of Lowpass Circuits (Using Detector)	4-95
4-44	Test Set-Up Diagram for Measuring Cut-off Frequency of Lowpass Circuits (Using Detector Probe)	4-96
4-45	Dot Positioned 3 Graticule Divisions above or below Major Horizontal Axis, on Major Vertical Axis	4-97
4-46	Horizontal Trace Positioned 3 Graticule Divisions above or below Major Horizontal Axis, Centered over Major Vertical Axis	4-97
4-47	Horizontal Trace Aligned with Major Horizontal Axis (Using Positive & Negative Detector)	4-98
4-48	Position of Horizontal Trace after Adding 3 dB to Signal Strength	4-99
4-49	Horizontal Trace (or Section of Frequency Response Curve) Positioned at Intersection of Major Axes	4-99
4-50	Test Set-Up Diagram for Measuring Cut-off Frequency of Highpass Circuits (Using Detector)	4-101
4-51	Test Set-Up Diagram for Measuring Cut-off Frequency of Highpass Circuits (Using Detector Probe)	4-102
4-52	Dot Positioned 3 Graticule Divisions above or below Major Horizontal Axis, on Major Vertical Axis	4-103
4-53	Horizontal Trace Positioned 3 Graticule Divisions above or below Major Horizontal Axis, Centered over Major Vertical Axis	4-103
4-54	Horizontal Trace Aligned with Major Horizontal Axis (Using Positive and Negative Detector)	4-104
4-55	Position of Horizontal Trace after Adding 3 dB to Signal Strength	4-105
4-56	Horizontal Trace (or Section of Frequency Response Curve) Positioned at Intersection of Major Axes	4-105
4-57	Test Set-Up Diagram for Oscillator Frequency Measurement	4-109

Figure No.	Title	Page
4-58	Oscillator Spectrum Aligned with Major Vertical Axis	4-110
4-59	Test Set-Up Diagram for Measuring RF Section Bandpass and Center Frequency (Using Detector)	4-113
4-60	Test Set-Up Diagram for Measuring RF Section Bandpass and Center Frequency (Using Detector Probe)	4-114
4-61	UUT Injection and Sample Points (Single Conversion Receiver)	4-114
4-62	UUT Injection and Sample Points (Dual Conversion Receiver)	4-114
4-63	Dot Positioned 3 Graticule Divisions above or below Major Horizontal Axis, on Major Vertical Axis	4-115
4-64	Horizontal Trace Aligned with Major Horizontal Axis (Using Positive and Negative Detector)	4-116
4-65	Horizontal Trace (or Section of Frequency Response Curve) Positioned at Intersection of Major Axis	4-117
4-66	Horizontal Trace (or Section of Frequency Response Curve) Positioned at Intersection of Major Axes	4-118
4-67	UUT Sample and Injection Points (Single Conversion Receiver)	4-119
4-68	UUT Sample and Injection Points (Dual Conversion Receiver)	4-119
4-69	Typical Displays of Frequency Response Curve	4-120
4-70	Typical Displays of Frequency Response Curve	4-121
4-71	UUT Injection and Sample Points (Single Conversion Receiver)	4-123
4-72	UUT Injection and Sample Points (Dual Conversion Receiver)	4-123
4-73	Typical Displays of Frequency Response Curve for Average Band Receivers	4-124
4-74	Typical Displays of Frequency Response Curve for Average Band Receivers	4-125

Figure No.	Title	Page
4-75	Typical Displays of Frequency Response Curve for Narrow Band Receivers	4-125
4-76	Typical Displays of Frequency Response Curve for Narrow Band Receivers	4-126
4-77	UUT Injection and Sample Points (Single Conversion Receiver)	4-127
4-78	UUT Injection and Sample Points (Dual Conversion Receiver)	4-127
4-79	Horizontal Trace Aligned with Major Horizontal Axis	4-128
4-80	Section of Frequency Response Curve Displayed Using Positive Detector	4-128
4-81	Section of Frequency Response Curve Displayed Using Negative Detector	4-129
4-82	High Edge of Frequency Response Curve Centered at Intersection of Major Vertical and Horizontal Axes (Using Positive Detector)	4-129
4-83	High Edge of Frequency Response Curve Centered at Intersection of Major Vertical and Horizontal Axes (Using Negative Detector)	4-130
4-84	Low Edge of Frequency Response Curve Centered at Intersection of Major Vertical and Horizontal Axes (Using Positive Detector)	4-130
4-85	Low Edge of Frequency Response Curve Centered at Intersection of Major Vertical and Horizontal Axes (Using Negative Detector)	4-131
4-86	Test Set-Up Diagram for Measuring Squelch Threshold and Differential (Fixed Squelch)	4-133
4-87	Test Set-Up Diagram for Measuring Squelch Threshold and Differential (Variable Squelch)	4-135
4-88	Test Set-Up Diagram for Measuring AGC Action	4-139
4-89	Displayed Carrier Signal Aligned with Major Horizontal Axis	4-140

Figure No.	Title	Page
4-90	Alignment of Upper and Lower Modulation Signals with Major Horizontal Axis	4-141
4-91	Modulated Signal Display	4-142
4-92	Scope Trace Exhibiting a Minor Amount of Noise	4-142
4-93	Test Set-Up Diagram for Measuring AM Sensitivity	4-145
4-94	Displayed Carrier Signal Aligned with Major Horizontal Axis	4-146
4-95	Alignment of Upper and Lower Modulation Signals with Major Horizontal Axis	4-147
4-96	Test Set-Up Diagram for Measuring FM Receiver 20 dB Quieting	4-149
4-97	Test Set-Up Diagram for Measuring 12 dB SINAD Sensitivity	4-151
4-98	Test Set-Up Diagram for Measuring Transmitter Carrier Power	4-157
4-99	Test Set-Up Diagram for Measuring AM Modulation of a Transmitter	4-161
4-100	Noise Level Display of Approximately 2.5 Graticule Divisions (Peak-to-Peak)	4-162
4-101	Negative Peaks of Modulation Envelope Resting on Major Horizontal Axis	4-163
4-102	Test Set-Up Diagram for Measuring Transmitter Deviation	4-165
5-1	Flowchart Symbol Referencing an Operating Test Procedure Contained in Section 4	5-3
5-2	Flowchart Symbol Referencing a Troubleshooting Flowchart Contained in Section 5	5-4
5-3	Flowchart Symbol Directing Operator to Return to "START" of "RECEIVER ALIGNMENT FLOWCHART"	5-4

Figure No.	Title	Page
5-4	Receiver Alignment Flowchart	5-7
D-1	Repacking for Shipment	D-2
E-1	Test Set-Up Diagram for Viewing Frequency Response Curve Directly on Oscilloscope	E-1
E-2	Frequency Response Curve Comparison (as viewed on oscilloscope with and without use of detector)	E-2
E-3	Frequency Response Curve Comparison (as viewed on oscilloscope with and without use of detector)	E-3
F-1	Pinouts for External Accessory Connector	F-1
F-2	Contact Assignments for External Modulation Connector	F-2
G-1	Flexible Coax Cable Preparation	G-1
G-2	Soldering Cable Center Conductor to Braided Shielding	G-1

SECTION 1 - INTRODUCTION

1-1 GENERAL

The FM/AM-1000S is a portable communications service monitor capable of performing a variety of transmission test functions normally associated with most types of transceiving equipment (e.g., citizen's band radios, FM two-way radios, single sideband equipment, repeaters and AM/FM/SSB transceivers).

As a portable unit containing an internal rechargeable battery pack, operation of FM/AM-1000S is possible almost anywhere without concern for immediate power. Mobile, aircraft or marine operation is possible directly from 11 to 28 volt DC power systems, using a furnished cigar lighter adaptor plug. AC power operation is possible from 110/230 VAC, 47 to 420 Hz power services.

1-2 FUNCTIONAL CAPABILITIES

The FM/AM-1000S incorporates the functions of the following test instruments:

FM/AM Receiver
FM/AM Signal Generator
RF Spectrum Analyzer
RF Frequency Meter
RF Wattmeter
Dual Tone Generator
RF Demodulator
Frequency Standard
Sweep Generator/Tracking Oscilloscope
DC to 1 MHz Oscilloscope
MM-100 Multimeter (Optional; see separate MM-100 Operation Manual for operating instructions.)

These capabilities permit the test set to perform numerous general purpose diagnostic functions, as well as most common transmitter/receiver performance tests, including:

TRANSMITTER	RECEIVER
Frequency Error	SINAD Sensitivity *
FM Deviation	Quieting Sensitivity
% AM Modulation	Receiver Distortion (At maximum deviation)
Power Output	Frequency Stability
Harmonic Content	Frequency Response
Distortion *	Distortion *
Frequency Stability	Audio Power Output *
Spurious Outputs	

* Requires MM-100 Multimeter option; functions of multimeter include AC/DC voltmeter, ohmmeter, % AM modulation meter, distortion meter, SINAD meter, selectable audio loads and audio monitor.

SECTION 2 - INSTALLATION

2-1 GENERAL

Installation of the FM/AM-1000S is a simple procedure which consists primarily of:

1. Setting instrument into an operating position.
2. Connecting external antenna to test set for "off-the-air" testing.
3. Furnishing electrical power to test set by connecting AC or DC power cable to available power source (unless battery operation is desired).

This section provides instructions for completing the above procedures with recommendations regarding installation/operation safety, equipment inspection, power requirements and required installation tools.

2-1-1 SAFETY PRECAUTIONS

Listed below are several important safety precautions which must be observed during all phases of installation and operation. IFR Inc. assumes no liability for customers's failure to comply with any of the safety precautions outlined in this manual.

- COMPLYING WITH INSTRUCTIONS
  Installation/operating personnel should not attempt to install or operate test set without reading and complying with all instructions contained in this manual. All procedures contained in this manual must be performed in exact sequence and manner described.

- GROUNDING REQUIREMENTS
  To minimize shock hazard, chassis and case of test set must be connected to an electrical ground. The FM/AM-1000S is furnished with an AC and DC power cable, each of which incorporates a ground pin for this purpose. The AC power cable is equipped with a standard 3-pin grounded plug on one end which must be connected only to a properly grounded 3-pin wall receptacle.

WARNING

- Due to potential safety hazards, use of three-prong to two-prong adaptor plug is not recommended.

The DC power cable features a cigar lighter adaptor on one end.

- OPERATING SAFETY
  Due to presence of potentially lethal voltages within test set, operating personnel must not remove test equipment covers at any time. Component replacement and internal adjustments must be made by qualified maintenance personnel only.

- OBSERVING "CAUTION" & "WARNING" LABELS
  Extreme care should be exercised when performing any operations preceded by a "CAUTION" or "WARNING" label. "CAUTION" labels appear where possibility of damage to equipment exists, while "WARNING" notes are used to denote a condition where a shock hazard exists, exposing personnel to possible bodily injury.

2-1-2 EQUIPMENT INSPECTION

All IFR test sets are carefully inspected for material defects and are subjected to a thorough performance check prior to leaving factory. All sets are shipped to customer in excellent mechanical/electrical condition. Upon receipt of shipment, receiving personnel should:

1. Account for presence of all equipment and accessories as listed on packing slip.

2. Inspect all equipment for visible or concealed damage which may have occured in transit. (If damage is apparent, see "RECEIVING INSPECTION/UNPACKING" sticker affixed to shipping container for "Damage Claim" procedure.)

2-1-3 POWER REQUIREMENTS

The FM/AM-1000S can be powered from its internal battery pack or from AC or DC power sources. For AC operation, all test sets are normally factory wired to accept external power service generally available at installation site. Prior to making any AC power connections, installation personnel must check test set power rating against power service rating, making sure both are same. (If equipment power rating and power service do not match, refer to "FM/AM-1000S Maintenance Manual" for power supply modifications.)

NOTE

- Instrument power rating information can be found on Model/Serial No. nameplate, located on bottom side of test set or in technical manual under "SPECIFICATIONS".

- An adhesive "CAUTION" sticker will be present on all sets and power cables wired for operation in a 230 VAC environment. (No sticker is present for equipment wired for 110 VAC.)

DC operation using furnished DC power cable is possible from any 12 V or 28 V power source which permits use of standard cigar lighter adaptor plug.

2-1-4 INSTALLATION EQUIPMENT

None required; all electrical connections required to ready instrumen for operation can be easily made by hand, without use of any special tools.

?-2 INSTALLATION PROCEDURE

POSITIONING TEST SET

1. Lift test set from shipping container and remove all packing material, tape etc. from set.

2. Extend support bracket on bottom of set to full locked position and place set on flat surface, bottom side down. (Bottom side of set has four plastic feet.)

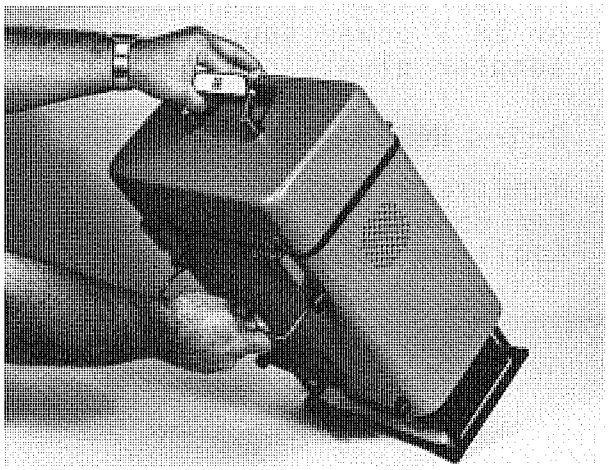

FIGURE 2-1 EXTENDING FM/AM-1000S SUPPORT BRACKETS

3. This is the most common operating position for the set when working on a bench or table. During mobile operation, set can be operated in an upright position, while resting on its metal support rails.

   Unlatch and fold back lid, exposing front panel face of test set. (If desired, lid can be detached from set at hinges by sliding lid to operator's right.)

FIGURE 2-2 FM/AM-1000S OPERATING POSITION

REMOVING SET ACCESSORIES

4. Remove retaining plate inside lid by rotating both quick-release latches counter-clockwise (ccw) and gently pulling plate straight out from lid.

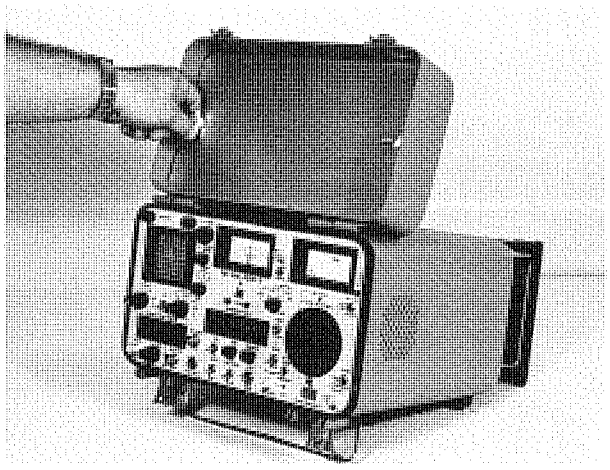

FIGURE 2-3 REMOVING LID RETAINING PLATE

5. Remove AC and DC power cables from inside of lid, along with 90° BNC connector. Note additional accessories attached to rear side of retaining plate removed in Step 4. Those accessories include:

   3 Spare Fuses
   1 Antenna
   1 Allen Wrench

   (See Appendix B for detailed list of FM/AM-1000S standard/ optional accessories.)

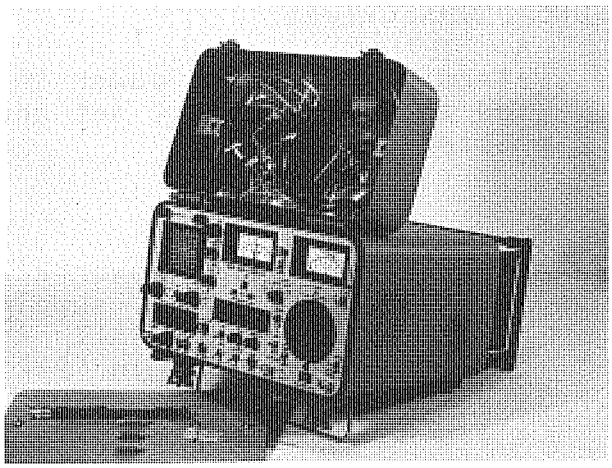

FIGURE 2-4 REMOVING FM/AM-1000S ACCESSORIES

CONNECTING ANTENNA

6. For "off-the-air" testing, antenna must be connected to ANT INPUT Connector (44) on front panel of test set. If test set is to be operated in an upright position, connect antenna directly to ANT INPUT Connector (44). If set is to rest on its support bracket during operation, attach antenna to furnished 90° BNC connector, then attach antenna/90° BNC connector assembly to ANT INPUT Connector (44).

CAUTION

- If an external antenna attached to an unterminated coax cable is used, remove any possible static charge buildup before connecting coax to ANT INPUT Connector. See procedure at right.

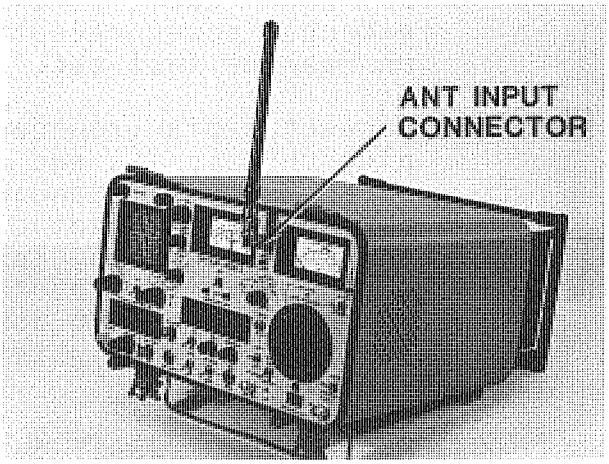

FIGURE 2-5 FM/AM-1000 WITH ANTENNA ATTACHED

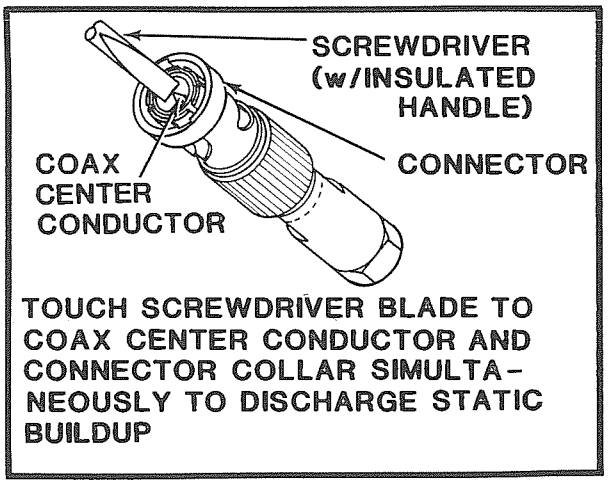

FIGURE 2-6 DISCHARGING STATIC BUILDUP FROM ANTENNA COAX

POWER CONNECTIONS

7. Determine source of power to be used to energize test set and proceed accordingly:

CAUTION

- When test set is powered from a vehicle's DC supply, make sure PWR/OFF/BATT Switch (9) is not in "PWR" position, while starting engine or blown fuse may result.

a. AC or DC POWER
   (1) Connect 6-pin socket on end of furnished AC (or DC) power cable to 6-pin external power receptacle on rear of test set.

   (2) Connect 3-pin grounded plug on opposite end of AC power cable to standard 3-pin grounded receptacle. (For DC operation, connect cigar lighter adaptor on opposite end of DC power cable to cigar lighter socket.)

   (3) Place PWR/OFF/BATT Switch (9) to "PWR" position to energize set.

b. BATTERY OPERATION
   (1) No power cable connections required; place PWR/OFF/BATT Switch to "BATT" position to energize set.

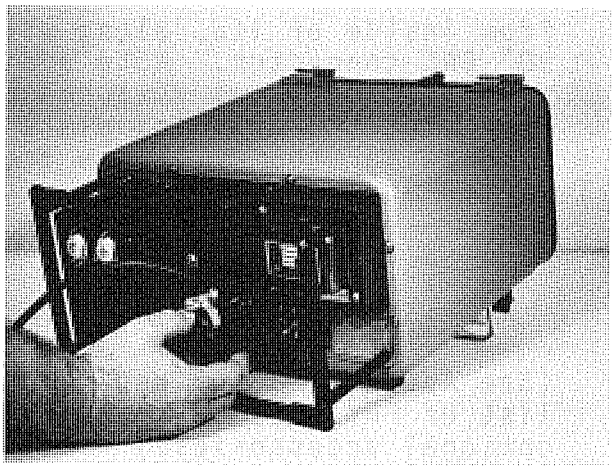

FIGURE 2-7 CONNECTING EXTERNAL AC OR DC POWER CABLE TO FM/AM-1000S

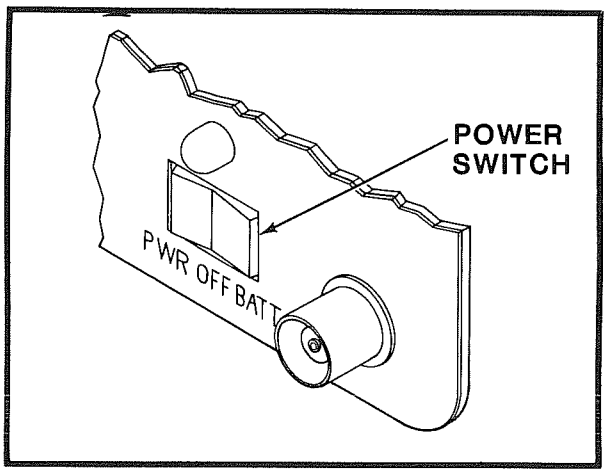

FIGURE 2-8 FM/AM-1000S SWITCH

SECTION 3 - DESCRIPTION OF CONTROLS, CONNECTORS & INDICATORS

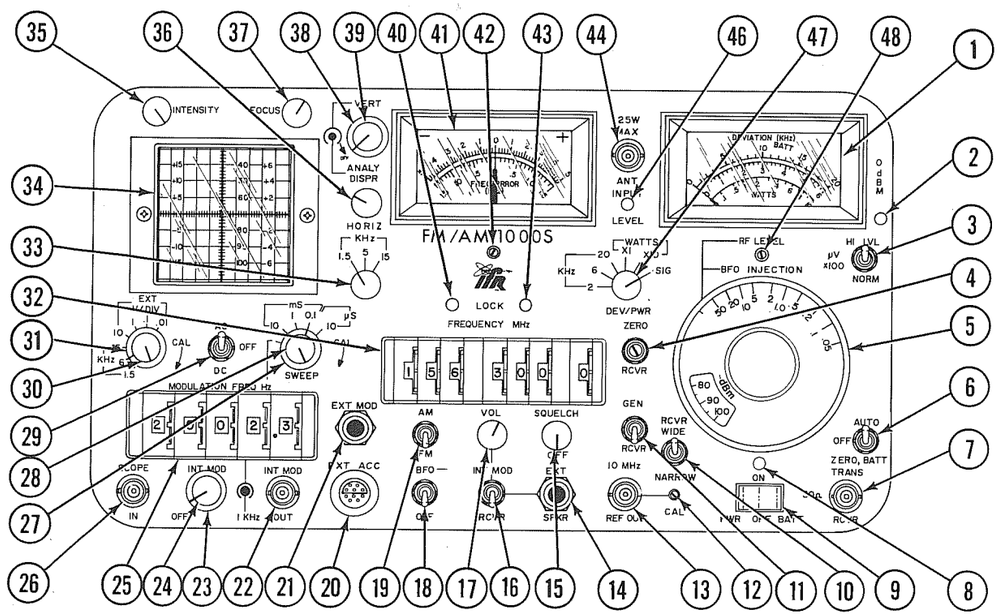

FIGURE 3-1 FM/AM-1000S FRONT PANEL

1 DEVIATION/WATTS Meter
2 0 dBm Lamp
3 HI LVL/µV X 100/NORM Switch
4 ZERO RCVR Adjustment
5 RF LEVEL/BFO INJECTION Dial
6 AUTO/OFF/ZERO, BATT Switch
7 TRANS/RCVR Connector
8 Power ON Lamp
9 PWR/OFF/BATT Switch
10 RCVR WIDE/MID/NARROW Switch
11 GEN/RCVR Switch
12 10 MHz CAL Adjustment
13 10 MHz REF OUT Connector
14 EXT SPKR Connector
15 SQUELCH Control
16 INT MOD/RCVR Switch
17 VOL Control
18 BFO/OFF Switch
19 AM/FM Switch
20 EXT ACC Connector
21 EXT MOD Connector
22 INT MOD OUT Connector
23 INT MOD Control
24 1 kHz INT MOD Control
25 MODULATION FREQ Hz Thumbwheels
26 SCOPE IN Connector
27 SWEEP Control
28 SWEEP Vernier Control
29 AC/OFF/DC Switch
30 EXT V/DIV Vernier Control
31 EXT V/DIV Control
32 FREQUENCY MHz Thumbwheels
33 1.5/5/15 kHz Control
34 CRT Display
35 INTENSITY Control
36 HORIZ Control
37 FOCUS Control
38 VERT Control
39 ANALY DISPR Control
40 High Frequency LOCK Lamp
41 FREQ ERROR Meter
42 FREQ ERROR Meter Zero Adjustment
43 Low Frequency LOCK Lamp
44 ANT INPUT Connector
45 NOT USED
46 INPUT LEVEL Lamp
47 DEV/PWR Control
48 DEVIATION/WATTS Meter Zero Adjustment

Item	Name	Description

1. DEVIATION/WATTS Meter
   Provides visual display of peak FM deviation, transmitter output power, transmitter signal strength (as received at ANT INPUT Connector (44)) and internal battery charge condition.

2. 0 dBm LAMP
   Illuminates when FM/AM-1000S RF signal output is at 0 dBm or above.

3. HI LVL/µV X 100/NORM Switch
   Three-position switch which selects power range for RF LEVEL/BFO INJECTION Dial (5) as follows:

   "NORMAL" position - RF/BFO output level is equal to setting of RF LEVEL/BFO INJECTION Dial (5) on "µV" or "dBm" scale.

   "µV X 100" position - RF/BFO output level is 100 times the RF LEVEL/BFO INJECTION Dial (5) setting on the "µV" scale. (Equivalent level in dBm is equal to reading of dBm scale, plus 40 dB.)

   "HIGH LEVEL" position - Enables RF output levels above -35 dBm to be achieved.

4. ZERO RCVR Adjustment
   Adjustment screw for zeroing FREQ ERROR Meter (41) when FM/AM-1000S power is "ON." (GEN/RCVR Switch (11) must be in "GEN" position when zeroing meter.)

5. RF LEVEL/BFO INJECTION Dial
   Controls FM/AM-1000S RF output level when set is operating in signal generator mode and BFO (beat frequency oscillator) injection level when set is operating in receiver mode. Control knob contains scales for reading power levels in both "µV" (microvolts) and "dBm" (decibels per milliwatt).

6. AUTO/OFF/ZERO, BATT Switch
   Three-position switch which activates/deactivates auto-zeroing circuit and provides a visual indication of internal battery voltage condition as follows:

   "AUTO" position - Auto-zeroing circuit is activated, automatically zeroing receiver and FREQ ERROR Meter (41) through an internal self-check.

   "OFF" position - Auto-zeroing circuit is deactivated.

Item	Name	Description

6. AUTO/OFF/ZERO, BATT Switch (cont'd)

"BATT" position - When switch is held in this springloaded position, a visual indication of internal battery voltage condition is displayed on DEVIATION/WATTS Meter (1). Battery is discharged when DEVIATION/WATTS Meter (1) reads 11 volts under load; FM/AM-1000S will turn off automatically when this condition occurs.

NOTE

- When activated, auto-zeroing reference pulse will cause minor CRT trace and meter meedle deflections to occur; this is a normal operating condition and should be disregarded.

- With auto-zeroing circuit activated, a 3 ms void will be produced by reference pulse every 1.5 seconds in generate/receive modes. If this condition hinders testing of UUT (Unit Under Test), place switch to "OFF" position. In "OFF" position, FREQ ERROR Meter (41) is not calibrated and should not be used for frequency error measurements.

7. TRANS/RCVR Connector
50 RF input/output connector for UUT.

CAUTION

- DO NOT APPLY MORE THAN 20 WATTS OF CONTINUOUS INPUT TO TRANS/RCVR CONNECTOR. Maximum "ON" time for measurement of transmitter output using TRANS/RCVR Connector is:

  10 seconds at 100 W, 15% Duty Cycle
  20 seconds at 50 W, 30% Duty Cycle
  2 minutes at 30 W, 50% Duty Cycle

8. Power ON Lamp
Illuminates when power is applied to FM/AM-1000S.

9. PWR/OFF/BATT Switch
Three-position rocker switch which supplies/interrupts power to FM/AM-1000S as follows:

"PWR" (Leftmost position) - Applies external AC or DC power to FM/AM-1000S.

Item	Name	Description

9. PWR/OFF/BATT Switch (cont'd)

"OFF" (Center position)	- Shuts off power to all FM/AM-1000S circuits, except battery charger circuit.
"BATT" (Rightmost position)	- Powers FM/AM-1000S by its internal battery set will turn off automatically after approximately eight minutes of operation, to prevent battery rundown.

NOTE

- FM/AM-1000S internal battery is charged whenever set is connected to an AC power source, including when power switch is "OFF."

10. RCVR WIDE/MID/NARROW Switch
Selects "WIDE", "MID" or "NARROW" bandwidth of FM/AM-1000S receiver.

11. GEN/RCVR Switch
Controls operating mode of FM/AM-1000S as a signal generator or receiver as follows:

"GEN" position	- FM/AM-1000S functions as a signal generator, producing RF output at TRANS/RCVR Connector (7). If RF energy is applied to this connector (7) while set is in generator mode, set will automatically switch to receiver mode.
"RCVR" position	- FM/AM-1000S functions as a receiver. Signal input (0.1 watt minimum required) may be direct through the TRANS/RCVR Connector (7) or "off-the-air" via an external antenna attached to ANT INPUT Connector (44).

12. 10 MHZ CAL Adjustment
Fine tuning adjustment for FM/AM-1000S 10 MHz master oscillator frequency.

13. 10 MHz REF OUT Connector
10 MHz master oscillator output connector.

14. EXT SPKR Connector
Audio output connector for remote speaker, headphones etc.

Item	Name	Description

15. SQUELCH Control
Squelch threshold adjustment; squelch disables audio output when RF input at ANT INPUT Connector (44) falls below squelch threshold.

NOTE

- SQUELCH Control is "OFF" when fully ccw in detent position. When out of detent position, rotate control cw to increase squelch threshold or ccw to decrease threshold. (The greater the squelch threshold, the greater the signal input required to break the threshold.)

16. INT MOD/RCVR Switch
Couples FM/AM-1000S receiver or dual tone generator audio output to FM/AM-1000S internal speaker.

17. VOL Control
Controls audio output level of FM/AM-1000S internal speaker (or external accessory speaker when connected to EXT SPKR Connector (14)).

18. BFO/OFF Switch
Activates or deactivates FM/AM-1000S internal beat frequency oscillator (BFO).

19. AM/FM Switch
Selects signal mode to be generated or received by FM/AM-1000S as follows:

"AM" position - FM/AM-1000S generates or receives amplitude modulated (AM) signals.

"FM" position - FM/AM-1000S generates or receives frequency modulated (FM) signals.

20. EXT ACC Connector
Output connector providing power or signal sources for external accessory equipment. (See Appendix F for connector pin assignments.)

21. EXT MOD Connector
Input connector for external modulation sources. (See Appendix F for connector contact assignments.)

22. INT MOD OUT Connector
Output connector which couples dual tone generator audio output to external devices. Output level is controlled by INT MOD Control (23) and 1 kHz INT MOD Control (24).

Item	Name	Description

22. INT MOD OUT Connector (cont'd)

NOTE

- Output can consist of one or any combination of following modulated signals mixed together:

  1 kHz INTERNAL MODULATION
  VARIABLE INTERNAL MODULATION
  EXTERNAL MODULATION

23. INT MOD Control
Controls %AM modulation or FM peak deviation of frequency selected on MODULATION FREQ Hz Thumbwheels (25). Modulation control is "OFF" in full ccw, detent position; when out of detent, rotate control cw to increase modulation level.

NOTE

- Modulated frequency can be externally keyed through the EXT MOD Connector (21).

24. 1 kHz INT MOD Control
Controls %AM modulation or FM peak deviation for an approximate 1 kHz tone. Modulation control is "OFF" in full ccw detent position; when out of detent, rotate control cw to increase modulation level.

25. MODULATION FREQ Hz Thumbwheels
Select internal modulation frequency produced by dual tone generator (10.0 Hz through 9999.9 Hz).

26. SCOPE IN Connector
Vertical deflection input for oscilloscope.

CAUTION

- DO NOT APPLY MORE THAN 200 VOLTS (PEAK-TO-PEAK) TO THIS CONNECTOR.

27. SWEEP Control
Controls horizontal sweep speed of oscilloscope in indicated millisecond or microsecond increments per graticule division.

28. SWEEP Vernier Control
Permits continuous variation of sweep speed within any of the ranges provided by SWEEP Control (27). In "CAL" position (fully cw, detent), oscilloscope horizontal graticule divisions are equal to setting of SWEEP Control.

Item	Name	Description

28. SWEEP Vernier Control (cont'd)

NOTE

- Do not make time measurements with SWEEP Vernier Control out of "CAL" position.

29. AC/OFF/DC Switch
Three-position switch which AC couples scope inputs in "AC" position, DC couples scope inputs in "DC" position and disconnects power from oscilloscope/spectrum analyzer in "OFF" position.

NOTE

- When switching from one coupling mode to another, pause briefly in "OFF" position; this ensures that scope power supply inverter will start.
- To conserve power during battery operation, place coupling switch to "OFF" when oscilloscope or spectrum analyzer are not in use.

30. EXT V/DIV Vernier Control
Permits variation of oscilloscope vertical sensitivity within any of the ranges provided by EXT V/DIV Control (31). In "CAL" position (fully cw detent), oscilloscope vertical graticule divisions are equal to setting of EXT V/DIV Control (31).

NOTE

- Do not make voltage mesurements with EXT V/DIV Vernier Control out of "CAL" position.

31. EXT V/DIV Control
Controls oscilloscope vertical sensitivity and input source applied to oscilloscope as follows:

"EXT V/DIV" positions - Selects oscilloscope vertical sensitivity (in indicated voltage increments per graticule division) for signals applied to SCOPE IN Connector (26).

"kHz" positions - Oscilloscope displays frequency deviation (in "FM" mode) or modulation envelope (in "AM" mode).

Item	Name	Description

31. EXT V/DIV Control (cont'd)

EXAMPLE: (Reference CRT display below.)
If EXT V/DIV Switch is positioned to 15 or 1.5 kHz setting, measured full scale frequency deviation is 15 kHz or 1.5 kHz along scale "A." If switch is positioned to 6 kHz setting, measured full scale frequency deviation is 6 kHz along scale "B".

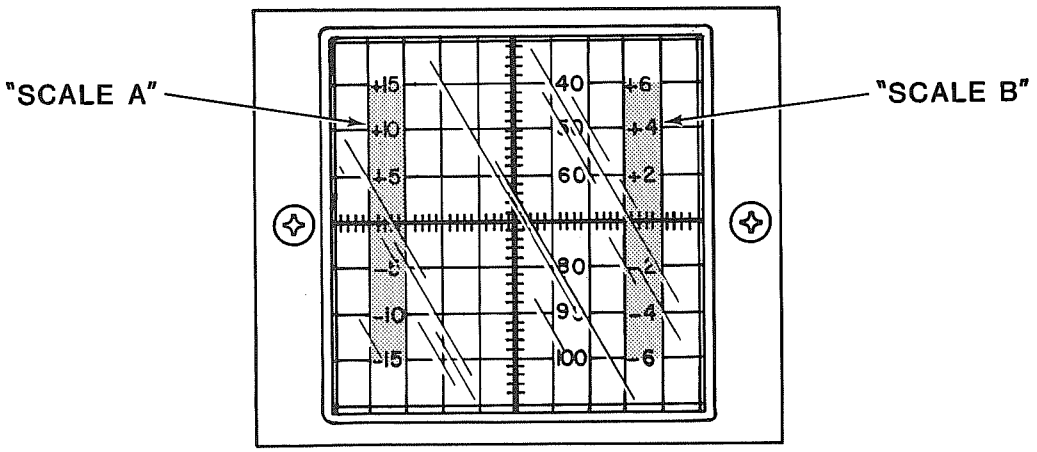

FIGURE 3-2 CRT DISPLAY DEVIATION SCALES

NOTE

- When viewing modulation envelope in "AM" mode, setting of EXT V/DIV Control in "kHz" range is irrelevant.

32. FREQUENCY Hz Thumbwheels
Select signal generator or receiver frequency.

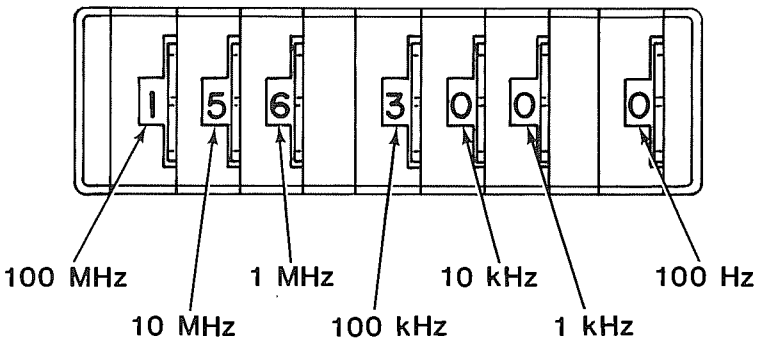

FIGURE 3-3 FREQUENCY MHz THUMBWHEELS

Item	Name	Description

33. 1.5/5/15 kHz Control
Selects full scale sensitivity of "FREQUENCY ERROR METER" (41).

34. CRT Display
Display screen for FM/AM-1000S oscilloscope or spectrum analyzer.

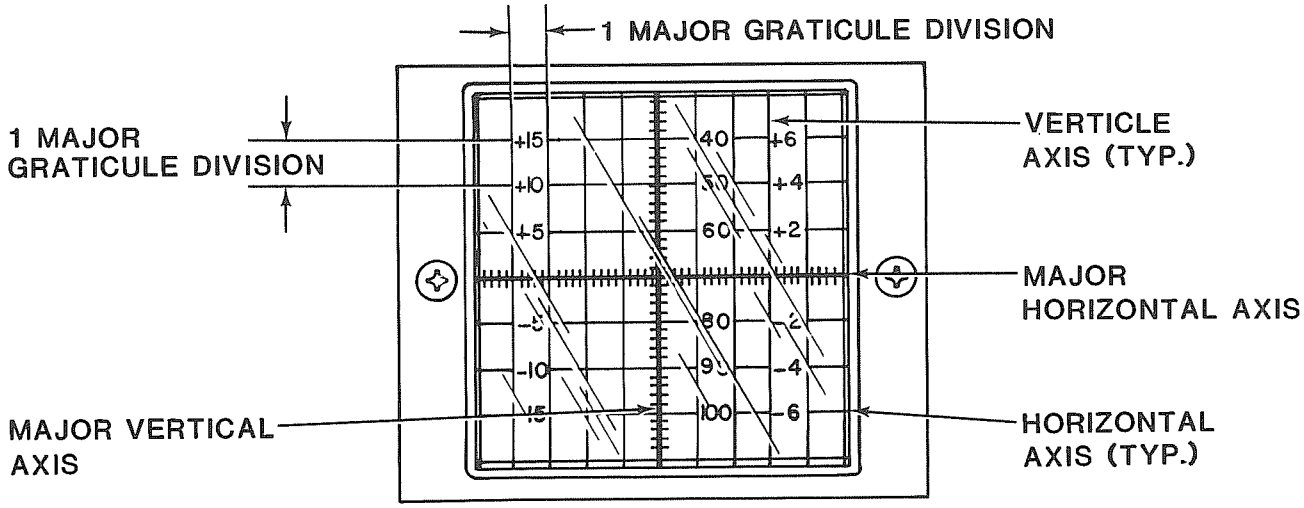

FIGURE 3-4 CRT DISPLAY GRATICULE MARKINGS

35. INTENSITY Control
Controls brightness of CRT trace. Rotate control ccw to decrease brightness, cw to increase brightness.

CAUTION

- When applying power to oscilloscope or spectrum analyzer through PWR/OFF/BATT Switch (9) or AC/OFF/DC Switch (29), make sure INTENSITY Control (35) is turned to a moderate intensity level.
- Warm-up time of CRT is approximately 30 seconds from a "cold" start-up; trace display will not become visible until CRT achieves warm-up.

36. HORIZ Control
Controls horizontal position of oscilloscope trace. Rotate control cw to move trace to right, ccw to move trace to left.

37. FOCUS Control
Controls sharpness of oscilloscope trace.

Item	Name	Description

38. VERT Control
Controls vertical position of oscilloscope trace. Rotate control cw to move trace up, ccw to move trace down.

39. ANALY DISPR Control
Continuously varies spectrum analyzer dispersion within a span of 1 to 10 MHz. Full cw rotation of control provides a dispersion of 1 MHz per major graticule division; full ccw rotation (short of detent position) provides a dispersion of 0.1 MHz per major graticule division. In full ccw detent position, spectrum analyzer is "OFF" and oscilloscope is "ON."

NOTE

- During spectrum analyzer operation, all oscilloscope controls except INTENSITY Control (35), FOCUS Control (37) and AC/OFF/DC Switch (29) are disabled. Spectrum Analyzer can be turned "OFF" using AC/OFF/DC Switch (29).

40. High Frequency Phase LOCK Light
When illuminated, indicates proper operation of High Frequency Phase Lock Board in FM/AM-1000S. Light will "blink" momentarily when "MHz" segments of FREQUENCY MHz Thumbwheels (32) are incremented or decremented, however light should remain illluminated at all other times when FM/AM-1000S power is "ON."

41. FREQ ERROR Meter
Provides visual display of difference between received signal frequency and FM/AM-1000S receiver frequency (as represented by FREQQUENCY MHz Thumbwheel (32) setting).

42. FREQ ERROR Meter Zero Adjustment
Mechanical zero adjustment of FREQ ERROR Meter (41) intended for use when power to FM/AM-1000S is "OFF."

43. Low Frequency Phase LOCK Light
When illuminated, indicates proper operation of 79-80 MHz Low Frequency Phase Lock Board in FM/AM-1000S. Light will "blink" momentarily when "kHz" and "Hz" segments of FREQUENCY MHz Thumbwheels (32) are incremented or decremented, however light should remain illuminated at all other times when FM/AM-1000S power is "ON."

44. ANT INPUT CONNECTOR
External antenna input to FM/AM-1000S, used primarily for "off-the air" testing.

Item	Name	Description

44. ANT INPUT Connector (cont'd)

CAUTION

- MAXIMUM CONTINUOUS INPUT ANT INPUT CONNECTOR MUST NOT EXCEED .25 W.
- MAXIMUM INPUT TO ANT INPUT CONNECTOR IS -30 dBm FOR PROPER SPECTRUM ANALYZER OPERATION. (Signals above -30 dBm may cause spurious signals to be generated and displayed by FM/AM-1000S.)
- IF AN EXTERNAL ANTENNA ATTACHED TO AN UNTERMINATED COAX CABLE IS USED, REMOVE ANY POSSIBLE STATIC CHARGE FROM ANTENNA COAX BEFORE CONNECTING TO FM/AM-1000S.

45. NOT USED

46. INPUT LEVEL Lamp
When illuminated, indicates input level at ANT INPUT Connector (44) is above squelch threshold of FM/AM-1000S receiver.

47. DEV/PWR Control
Selects ranges for peak FM frequency deviation, input power at TRANS/RCVR Connector (7) and received signal strength as follows:

"kHz" positions - Selects full scale range for peak FM deviation as displayed by DEVIATION/WATTS Meter (1).

"WATTS" positions - Selects multiplier for output power measurements on red "WATTS" scale of DEVIATION/WATTS Meter (1).

"SIG" position - For signals received "off-the-air", a qualitative respresentation of relative signal strength can be determined by observing DEVIATION/WATTS Meter (1) needle deflection. As signal strength increases, the meter needle deflection will increase towards right of meter scale.

48. DEVIATION/WATTS Meter Zero Adjustment
Mechanical zero adjustment of DEVIATION/WATTS Meter intended for use when FM/AM-1000S power is "OFF."

SECTION 3 - DESCRIPTION OF CONTROLS, CONNECTORS & INDICATORS

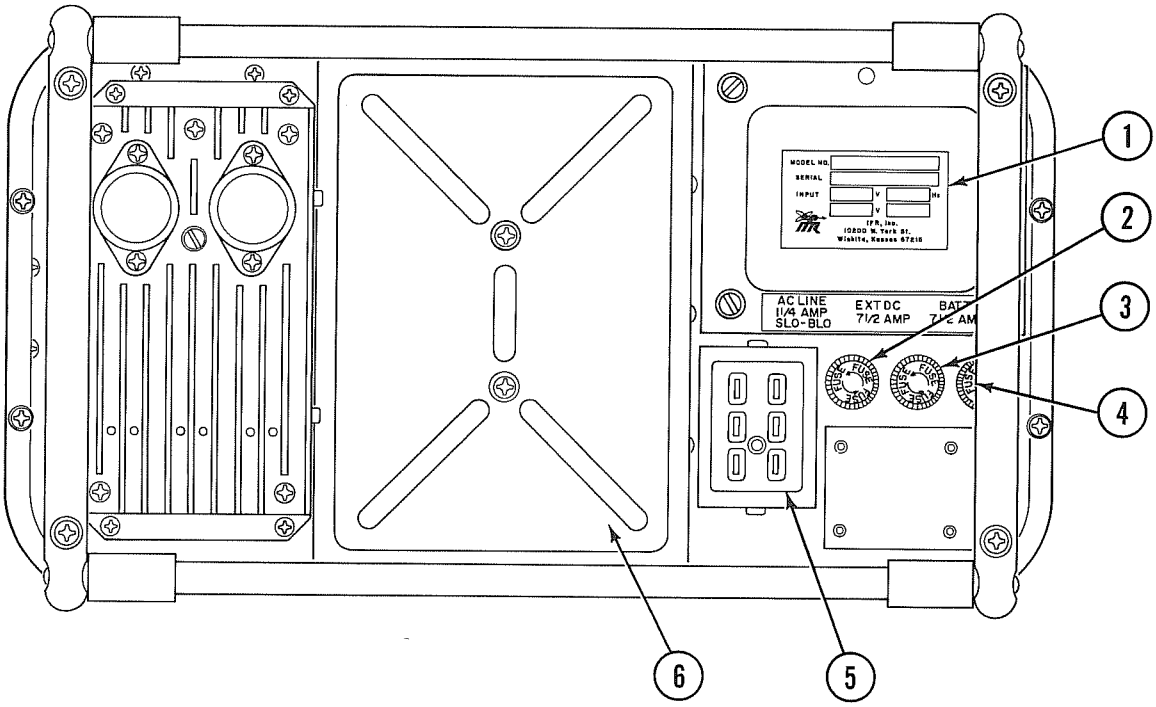

FIGURE 3-5 FM/AM-1000S REAR PANEL

ITEM	NAME	DESCRIPTION
1.	SERIAL NO. NAMEPLATE	
2.	AC LINE FUSE	1¼ Amp. SLO BLO fuse.
3.	EXTERNAL DC FUSE	7½ Amp. fuse.
4.	BATTERY FUSE	7½ Amp. fuse.
5.	6-PIN EXTERNAL POWER RECEPTACLE	
6.	BATTERY HOUSING	

SECTION 4 - OPERATION

4-1 GENERAL

This section contains operating instructions relating to all major functions of the FM/AM-1000S and is divided into the following two major subsections:

BASIC FUNCTIONAL OPERATING PROCEDURES

Section	Title
4-2	Test Procedures Using FM/AM-1000S Oscilloscope
4-3	Test Procedures Using FM/AM-1000S Spectrum Analyzer
4-4	Test Procedures Using FM/AM-1000S Dual Tone Generator
4-5	Test Procedures Using FM/AM-1000S RF Generator
4-6	Test Procedures Using FM/AM-1000S Receiver
4-7	Test Procedures Using FM/AM-1000S as a Sweep Generator/Tracking Oscilloscope.

GENERAL RECEIVER/TRANSMITTER TESTS

Section	Title
4-8	General Receiver Tests
4-9	General Transmitter Tests

For purposes of clarity and ease of understanding, all instructions are presented as individual test procedures conforming to a "step by step" format. The procedures included within each section are those most commonly associated with the various functions of the FM/AM-1000S and AM/FM transceiver testing.

Each group of "BASIC FUNCTIONAL OPERATING PROCEDURES" is preceded by a brief introductory paragraph relating to the particular FM/AM-1000S function to be used, followed by a table containing FM/AM-1000S initial control settings required for use of that function. Each individual test procedure in turn (including those under "GENERAL RECEIVER/TRANSMITTER TESTS"), contains the following common headings:

4-2-1	Test procedure number.
TEST PROCEDURE:	Name of procedure to be performed.
TEST OBJECTIVE:	Purpose or intent of procedure; if name of "TEST PROCEDURE" itself implies test objective, this heading will contain N/A (not applicable).
SPECIAL ACCESSORY EQUIPMENT REQ'D:	List of any special accessory test equipment required to complete procedure, beyond FM/AM-1000S and UUT.
TEST SET-UP DIAGRAM:	A diagrammatic aid to operator in making proper connections between FM/AM-1000S, UUT and special accessory equipment.

4-1 GENERAL (CONT'D)

NOTE

Those procedures bearing the the symbol MM-100 on the upper right hand corner of the page, can be more easily performed using the MM-100 Multi-Meter option. If your FM/AM-1000S is so equipped, refer to MM-100 Operation Manual for the corresponding procedure.

4-1-1 PRE-OPERATIONAL CONSIDERATIONS

For maximum benefit of all operating procedures contained herein, it is strongly recommended that operator:

1. Thoroughly read and understand all steps of procedure to be performed, prior to its completion.

2. Be familiar with the circuit or unit under test so some idea is perceived as to the voltage, frequency and waveform to be expected at each test point. This knowledge will aid operator in performing the test procedure in a logical efficient manner with a minimum of blind searching.

4-1-2 OPERATING PRECAUTIONS

In addition to the general safety precautions listed under Section 2-1-1 of this manual, the operator must observe the following additional operating precautions:

1. When working with "live" circuits of high potential, keep one hand in pocket or behind back to avoid serious shock hazard.

2. Remove all jewelry or other cosmetic apparel before performing any test procedures involving "live" circuits.

3. Use only insulated troubleshooting tools when working with "live" circuits.

4. For added insulation, place rubber bench mat underneath all powered bench equipment, as well as a rubber floor mat underneath operator chair.

5. Heed all WARNINGS and CAUTIONS concerning maximum voltage and power inputs.

6. Avoid using oscilloscope/spectrum analyzer in direct sunlight, as scope trace is difficult to see under these conditions.

7. Do not allow scope trace to become concentrated on CRT as a stationary spot, as CRT screen may be burned permanently. Reduce trace intensity if trace must remain stationary.

8. Protect FM/AM-1000S from vibration or mechanical shock. The CRT of the FM/AM-1000S is highly evacuated and if broken, will implode causing possible serious injury from fragmented glass.

4-2 TEST PROCEDURES USING FM/AM-1000S OSCILLOSCOPE

4-2-1 GENERAL

The FM/AM-1000S contains a 1 MHz oscilloscope designed for use as a general purpose diagnostic tool. The operator can use this instrument to observe or measure such signal characteristics as AC/DC voltage level, waveshape, pulse duration, pulse spacing and frequency. Additional features unique to this oscilloscope include the selectability of two sweep sources (internal saw-tooth generator and dual tone generator) and the ability to monitor both AM and FM signal modulation.

The procedures contained in this section are:

4-2-3 MEASURING DC VOLTAGES
4-2-4 MEASURING PEAK-TO-PEAK VOLTAGES
4-2-5 MEASURING RMS AC VOLTAGES (Sine Wave Only)
4-2-6 MEASURING PEAK AC VOLTAGES
4-2-7 MEASURING FREQUENCIES BETWEEN 5 kHz AND 500 kHz
4-2-8 MEASURING PULSE DURATION AND DUTY CYCLE

4-2-2 INITIAL FM/AM-1000S CONTROL SETTINGS FOR OSCILLOSCOPE OPERATION

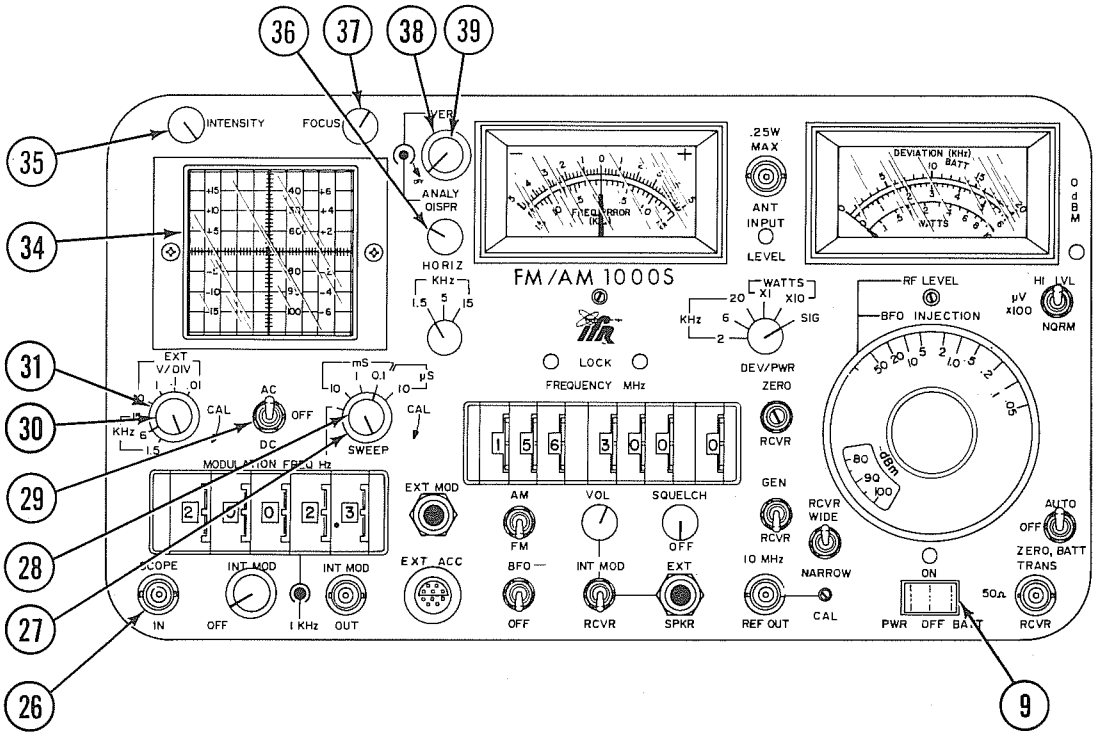

FIGURE 4-1 FM/AM-1000S CONTROLS APPLICABLE TO OSCILLOSCOPE OPERATION

(Refer to "SECTION 3 - DESCRIPTION OF CONTROLS, CONNECTORS & INDICATORS" for functional description of any controls used in this section.)

NOTE

- Before performing any procedures contained in this section pertaining to oscilloscope operation, make sure all applicable test set controls are positioned as outlined below.
- Some of the control settings outlined below may be changed during the course of a given procedure; all controls, however, should be reset to initial positions described below when starting a new procedure.

	CONTROL	INITIAL SETTING
9	PWR/OFF/BATT Switch	"OFF" position
27	SWEEP Control	"1ms" position
28	SWEEP Vernier Control	Fully cw, detent (in "CAL" position)
29	AC/OFF/DC Switch	"DC" position
30	EXT V/DIV Vernier Control	Fully cw, detent (in "CAL" position)
31	EXT V/DIV Control	"10 V/DIV" position
35	INTENSITY Control	Midrange position
36	HORIZ Control	Midrange position

4-2-2 INITIAL FM/AM-1000S CONTROL SETTINGS FOR OSCILLOSCOPE OPERATION (CONT'D)

	CONTROL	INITIAL SETTING
37	FOCUS Control	Midrange position
38	VERT Control	Midrange position
39	ANALY DISPR Control	Fully ccw, detent

Other FM/AM-1000S features related to oscilloscope operation but not requiring an initial setting:

26 SCOPE IN Connector
34 CRT Display

The FM/AM-1000S is now ready for oscilloscope operation.

4-2-3

TEST PROCEDURE: ***MEASURING DC VOLTAGES***

TEST OBJECTIVE: N/A

SPECIAL ACCESSORY EQUIPMENT REQ'D: N/A

TEST SET-UP DIAGRAM: N/A

STEP	PROCEDURE
1.	Set FM/AM-1000S controls for general oscilloscope operation as shown in Figure 4-1, page 4-5.
2.	Apply power to FM/AM-1000S.
3.	Apply power to UUT.
4.	Adjust INTENSITY Control (35) cw and FOCUS Control (37) appropriately to obtain a sharp visible trace display.

NOTE

- Warm-up time of CRT is approximately 30 seconds from a "cold" start-up; trace display will not become visible until CRT achieves warm-up.

5.	Adjust VERTICAL Control (38) and HORIZ Control (36) to center scope trace over major horizontal axis of CRT.

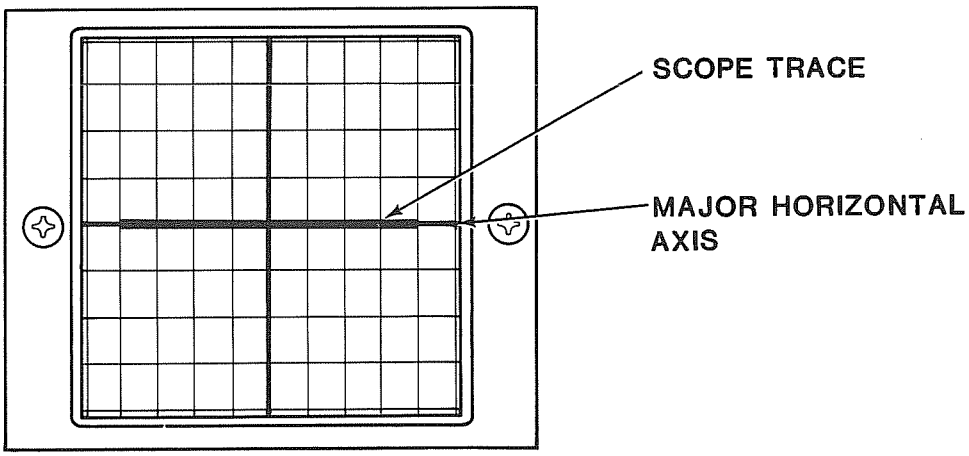

FIGURE 4-2 SCOPE TRACE CENTERED OVER MAJOR HORIZONTAL AXIS

STEP PROCEDURE

6. Apply signal to be measured to SCOPE IN Connector (26) using a scope probe or coax. If a scope probe is used, make sure ground lead is attached to UUT ground.

CAUTION

- DO NOT APPLY MORE THAN 200 VOLTS (PEAK-TO-PEAK) TO SCOPE IN CONNECTOR (26).

7. Observe trace deflection in relation to major horizontal axis to which trace was previously aligned:

   a. If trace deflection is downward (towards bottom of CRT), voltage being measured is negative.

   b. If trace deflection is upward (towards top of graticule), voltage being measured is positive.

8. To determine voltage of signal:

   a. Count and record number of graticule divisions (along major vertical axis) from major horizontal axis to location where trace is now deflected (see examples below):

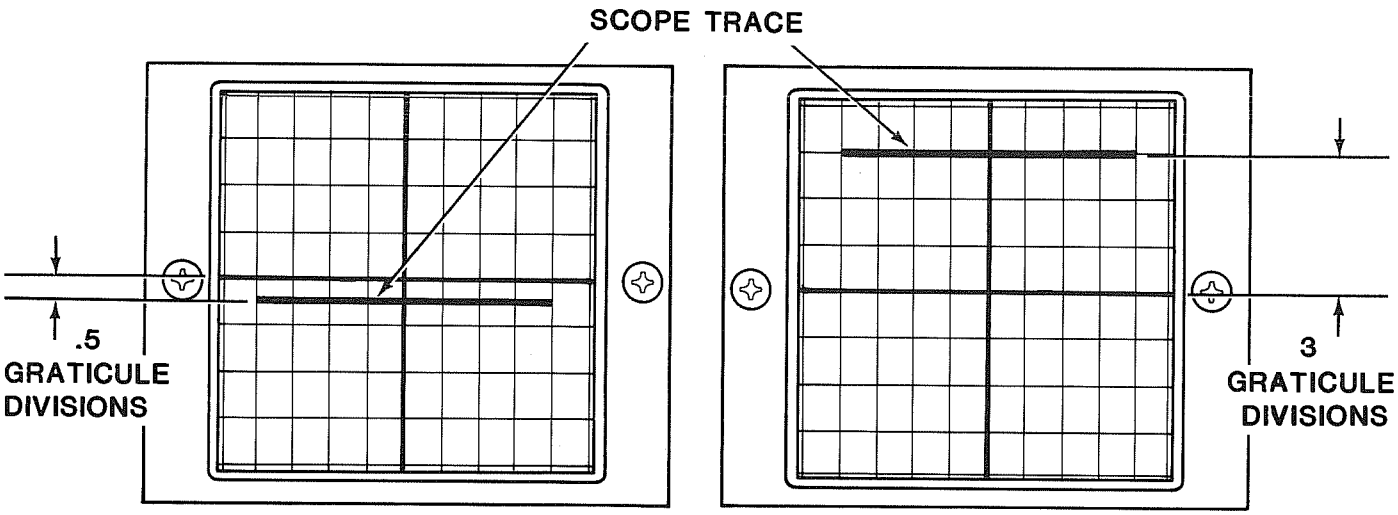

FIGURE 4-3 EXAMPLES OF DC VOLTAGE MEASUREMENTS

NOTE

- If trace deflection from major horizontal axis is to small to be accurately measured, adjust EXT V/DIV Control to next smaller volts/division setting. This should result in a greater trace deflection.

STEP	PROCEDURE

8. (cont'd)

b. Multiply result obtained in Step 8a by setting of EXT V/DIV Control (31):

Trace deflection in graticule divisions	X	Setting of EXT V/DIV Control	=	DC VOLTAGE

EXAMPLE: Trace deflection = 2.6 graticule divisions

EXT V/DIV
Control Setting = .1 volts/division

(2.6) x (.1) = .26 volts DC

4-2-4

TEST PROCEDURE: ***MEASURING PEAK TO PEAK VOLTAGES***

TEST OBJECTIVE: N/A

SPECIAL ACCESSORY EQUIPMENT REQ'D: N/A

TEST SET-UP DIAGRAM: N/A

STEP	PROCEDURE
1.	Set FM/AM-1000S controls for oscilloscope operation as shown in Figure 4-1, page 4-5.
2.	Place scope AC/OFF/DC Switch (29) to "AC" position.
3.	Apply power to FM/AM-1000S.
4.	Apply power to UUT.
5.	Adjust INTENSITY Control (35) cw and FOCUS Control (37) appropriately to obtain a sharp visible trace display.

NOTE

- Warm-up time of CRT is approximately 30 seconds from a "cold" start-up; trace display will not become visible until CRT achieves warm-up.

6.	Adjust VERT Control (38) and HORIZ Control (36) to center scope trace over major horizontal axis of CRT.
7.	Apply signal to be measured to SCOPE IN Connector (26) using a scope probe or coax. If a scope probe is used, make sure ground lead is attached to UUT ground.

CAUTION

- DO NOT APPLY MORE THAN 200 VOLTS (PEAK-TO-PEAK) TO SCOPE IN CONNECTOR (26).

8.	Adjust SWEEP Control (27), EXT V/DIV Control (31) and SWEEP Vernier Control (28) to obtain a stable waveform display of signal to be measured.

STEP PROCEDURE

8. (cont'd)

NOTE

- EXT V/DIV Vernier Control(30) must remain in "CAL" position (fully cw, detent).

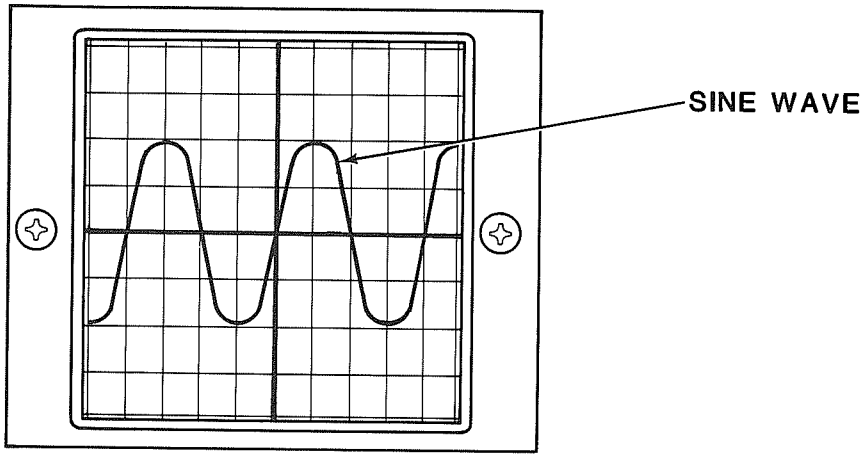

FIGURE 4-4 STABLE SINE WAVE DISPLAY

9. Adjust VERT Control (38) until negative peaks of waveform rest on any horizontal axis of scope display.

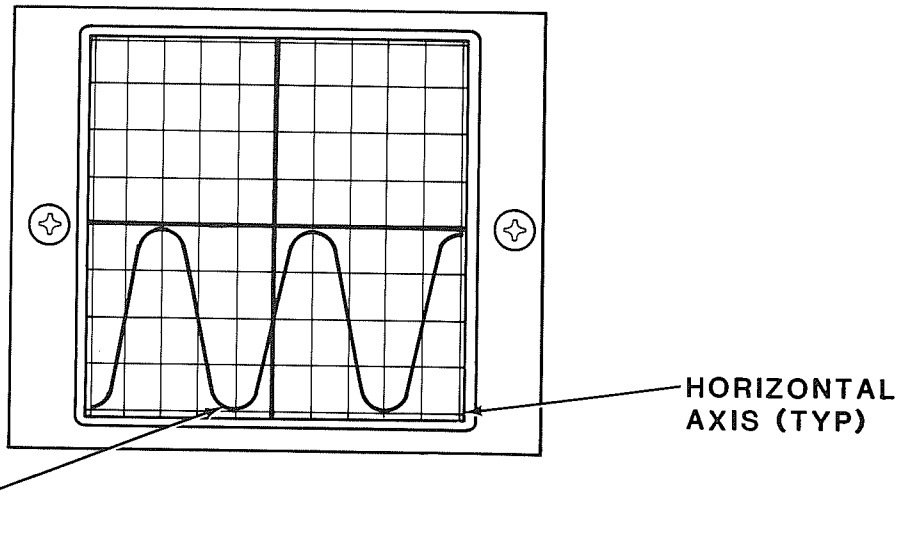

FIGURE 4-5 NEGATIVE PEAKS OF SINE WAVE RESTING ON HORIZONTAL AXIS

STEP	PROCEDURE
10.	Adjust HORIZ Control (36) to center positive peak of waveform over major vertical axis of CRT.

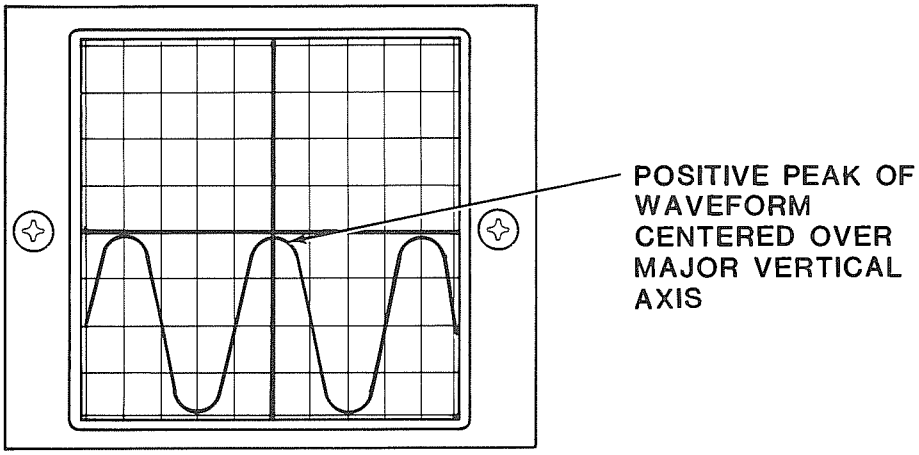

FIGURE 4-6 POSITIVE PEAK OF WAVEFORM CENTERED OVER MAJOR VERTICAL AXIS

11. Count number of graticule divisions between positive and negative peaks of waveform. Record this number.

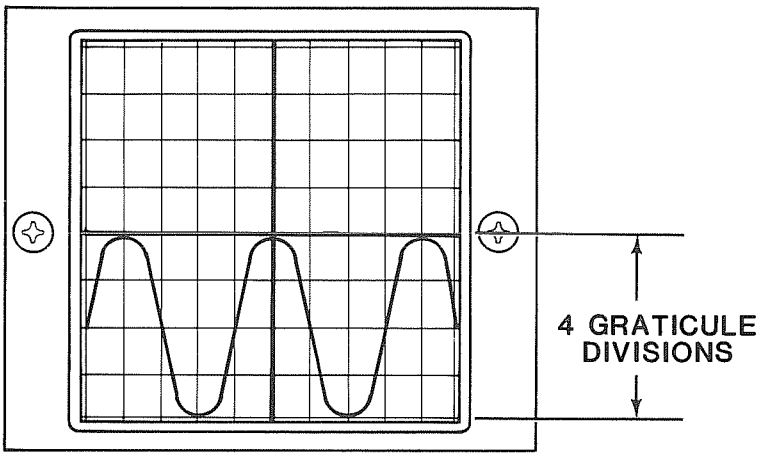

FIGURE 4-7 MEASURING PEAK-TO-PEAK AMPLITUDE OF WAVEFORM

12. Multiply result obtained in Step 9 by setting of EXT V/DIV Control (31):

No. of graticule divisions from negative to positive peak	X	Setting of EXT V/DIV Control	=	PEAK-TO-PEAK VOLTAGE

STEP	PROCEDURE
12.	(cont'd)

EXAMPLE: Graticule divisions from positive to negative peaks: 4.5

EXT V/DIV Control Setting = 1 VOLT/DIVISION

(4.5) X (1) = 4.5 VOLTS PEAK-TO-PEAK

4-2-4

TEST PROCEDURE: ***MEASURING RMS AC VOLTAGES (SINE WAVE ONLY)***

TEST OBJECTIVE: N/A

SPECIAL ACCESSORY EQUIPMENT REQ'D: N/A

TEST SET-UP DIAGRAM: N/A

STEP	PROCEDURE
1.	Perform procedure 4-2-4, titled "HOW TO MEASURE PEAK-TO-PEAK VOLTAGES", on page 4-11.
2.	Apply resultant peak-to-peak voltage to following equation:

$$\text{VOLTS RMS} = \frac{Vp\text{-}p}{2} \times 0.707$$

EXAMPLE:

Peak-to-peak voltage obtained in Step 1 = 6.8 Volts

$$\text{VOLTS RMS} = \frac{6.8}{2} \times 0.707$$

$$\text{VOLTS RMS} = 3.4 \times 0.707$$

$$\text{VOLTS RMS} = 2.4038$$

4-2-6

TEST PROCEDURE: ***MEASURING PEAK AC VOLTAGES***

TEST OBJECTIVE: N/A

SPECIAL ACCESSORY EQUIPMENT REQ'D: N/A

TEST SET-UP DIAGRAM: N/A

STEP	PROCEDURE
1.	Perform procedure 4-2-4, titled "HOW TO MEASURE PEAK-TO-PEAK VOLTAGES", on page 4-11.
2.	Divide resultant peak-to-peak voltage by two. The result of this step is the peak voltage (Vp).

4-2-7

TEST PROCEDURE: ***MEASURING FREQUENCIES BETWEEN 5 Hz AND 500kHz****

(* The frequency response of the FM/AM-1000's oscilloscope is 1 MHz. However, due to the resolution of the scope trace and the limitations of the sweep range, 500 kHz is the largest practical frequency that can be measured under this procedure.)

TEST OBJECTIVE: N/A

SPECIAL ACCESSORY EQUIPMENT REQ'D: Calculator

TEST SET-UP DIAGRAM: N/A

STEP	PROCEDURE
1.	Set FM/AM-1000S controls for general oscilloscope operation as shown in Figure 4-1, page 4-5.
2.	Place AC/OFF/DC Switch (29) to "AC" position.
3.	Apply power to UUT.
4.	Apply power to FM/AM-1000S.
5.	Adjust INTENSITY Control (35) cw and FOCUS Control (37) appropriately to obtain a sharp visible trace display.

NOTE

- Warm-up time of CRT is appproximately 30 seconds from a "cold" start-up; trace display will not become visible until CRT achieves warm-up.

6.	Adjust VERT Control (38) and HORIZ Control (36) to center scope trace over major horizontal axis of CRT.
7.	Apply signal to be measured to SCOPE IN Connector (26) using a scope probe or coax. If a scope probe is used, make sure ground lead is attached to UUT ground.

CAUTION

- DO NOT APPLY MORE THAN 200 VOLTS (PEAK-TO-PEAK) TO SCOPE IN Connector (26).

STEP PROCEDURE

8. Adjust SWEEP Control (27) and EXT V/DIV Control (31) to obtain a stable waveform display of signal being measured. EXT V/DIV Vernier Control (30) may also be adjusted to achieve desired amplitude of waveform, however, SWEEP Vernier Control (28) must be in "CAL" position (fully cw, detent).

NOTE

- To facilitate measurement of one wavelength of displayed signal, adjust SWEEP Control to produce a waveform with a minimum number of cycles.
- At certain signal frequencies, adjustment of SWEEP Control (27) may produce at best, a closely packed waveform containing numerous cycles or multiple (and possible unstable) waveforms not in phase. See examples below:

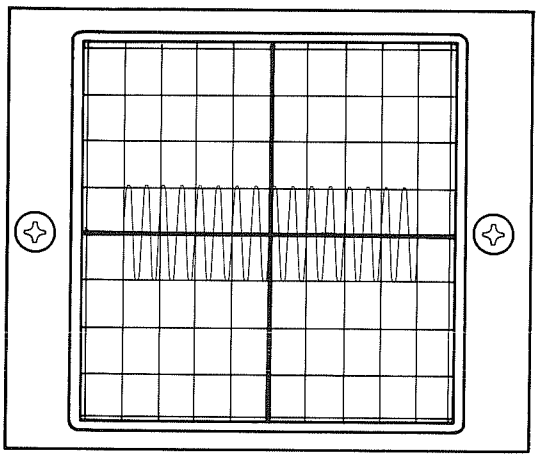

CLOSELY PACKED WAVEFORM

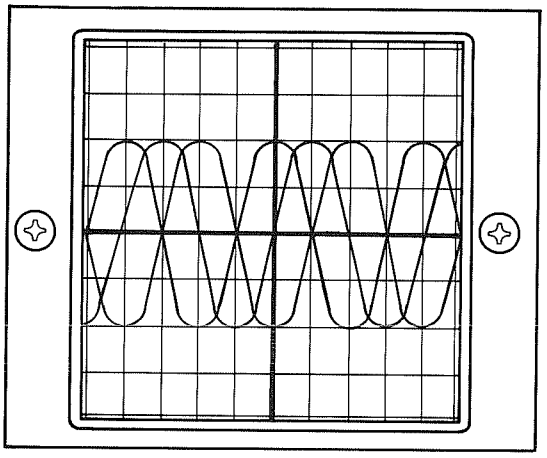

MULTIPLE WAVEFORMS NOT IN PHASE

FIGURE 4-8 EXAMPLES OF CLOSELY PACKED AND MULTIPLE WAVEFORMS

In this situation, operator should select waveform where an accurate measurement of one wavelength (in major graticule divisions) can be made most easily.

9. When a waveform suitable for measurement has been obtained on CRT, use HORIZ Control (36) and VERT Control (38) to align waveform on CRT as follows:

a. Adjust VERT Control (38) to center waveform over any horizontal axis.

b. Adjust HORIZ Control so any "positive going zero crossing" of waveform is aligned with any vertical axis.

STEP PROCEDURE

9. (cont'd)

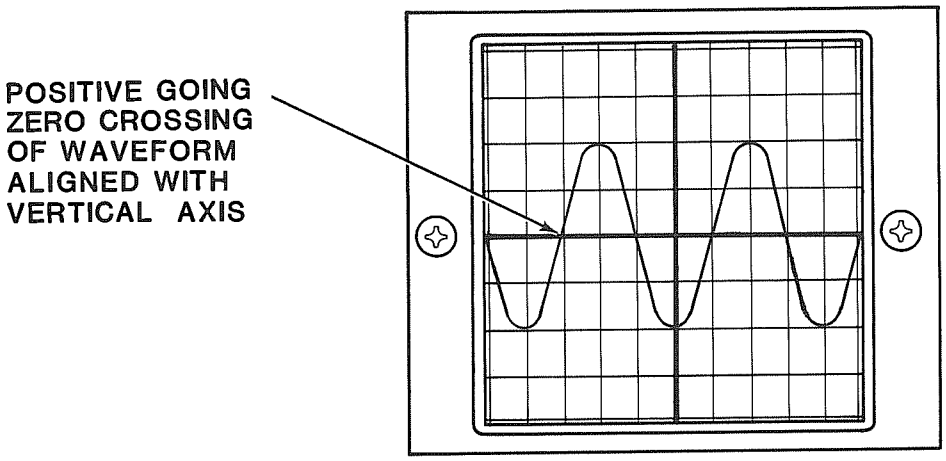

FIGURE 4-9 POSITIVE GOING ZERO POINT OF WAVEFORM ALIGNED WITH VERTICAL AXIS

10. Count number of vertical graticule divisions per one full wavelength, starting at the "positive going zero crossing" aligned in Step 9b. Record this number.

EXAMPLES:

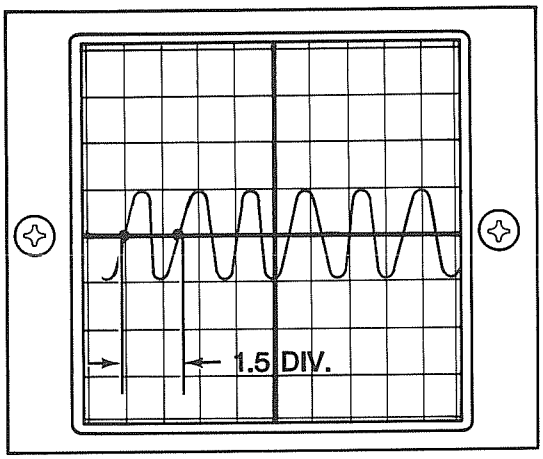

1 WAVELENGTH = 1.5 GRAT. DIV.

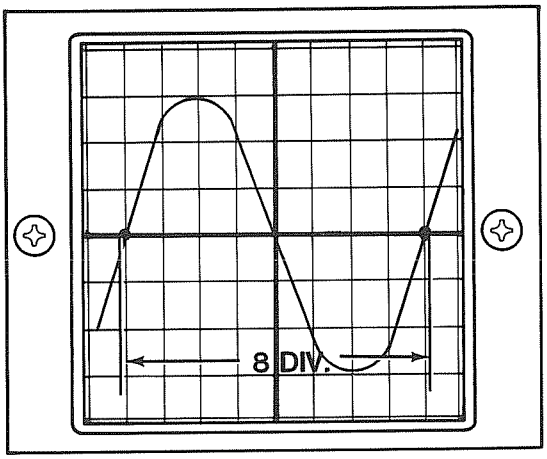

1 WAVELENGTH = 8 GRAT. DIV.

FIGURE 4-10 MEASURING WAVELENGTH IN GRATICULE DIVISIONS

11. Apply result obtained in Step 10 to following formula:

$$\frac{1}{\text{No. of graticule divisions} \times \text{Setting of SWEEP Control}} = \text{Approx. frequency of signal under test}$$

STEP PROCEDURE

11. (cont'd)

EXAMPLE: If the result obtained in Step 10 is 2.5 graticule divisions and setting of SWEEP Control (27) is 0.1 milliseconds, the formula is solved as follows:

$$\frac{1}{(2.5) \times (0.1 \text{ milliseconds})}$$

$$\frac{1}{(2.5) \times (.0001)}$$

$$\frac{1}{.00025} = 4000 \text{ Hz}$$

The result of this equation represents approximate frequency of signal under test.

(For more accurate frequency measurement using "Lissajou" method, perform Steps 12 thru 18.)

12. Place SWEEP Control (27) to "MODULATION FREQ Hz" position. Oscilloscope will now display a solid trace area randomly positioned on CRT.

13. Adjust INT MOD Control (23), EXT V/DIV Control (31) EXT V/DIV Vernier Control (30), HORIZONTAL Control (36) and VERT Control (38) to create a comfortably sized solid square trace area on scope display.

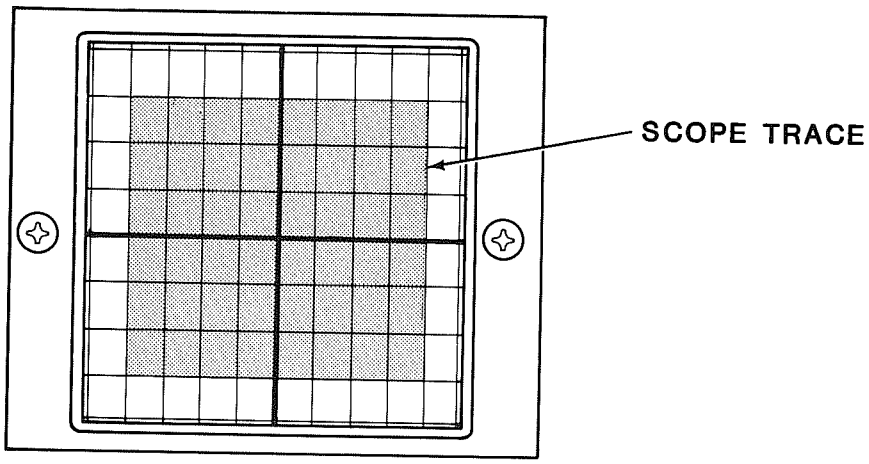

FIGURE 4-11 SOLID SQUARE TRACE AREA DISPLAYED ON CRT

STEP	PROCEDURE

14. Set MODULATION FREQ Hz Thumbwheels (25) to signal frequency obtained in Step 11, if that frequency is no greater than 9999.9 Hz.

    a. If frequency exceeds 9999.9 Hz, perform following mathematical operation:

If frequency obtained in Step 11 is:	Divide that frequency by:
10 kHz to 19.999 kHz	2
20 kHz to 29.999 kHz	3
30 kHz to 39.999 kHz	4
40 kHz to 49.999 kHz	5

    b. Set MODULATION FREQ Hz Thumbwheels (25) to resultant frequency obtained in Step 14a.

15. To determine exact frequency of signal being measured, operator must obtain a stable Lissajou figure on CRT. First determine the order of Lissajou figure being sought by referring to following table:

FREQ. OBTAINED IN STEP 11	LISSAJOU ORDER *
5 Hz to 9999.9 Hz	1 (First)
10 kHz to 19.999 kHz	2 (Second)
20 kHz to 29.999 kHz	3 (Third)
30 kHz to 39.999 kHz	4 (Fourth)
40 kHz to 49.999 kHz	5 (Fifth)

(* See reference chart on page 4-25 for illustration of Lissajou figures.)

16. Begin incrementing or decrementing MODULATION FREQ Hz Thumbwheels (25) in 10 Hz steps, while carefully observing scope trace for any radical, yet brief oscillation which might be the Lissajou figure being sought. Generally, the exact frequency of the signal under test will be within ±20% of approximate frequency obtained in Step 11.

17. Once the oscillation of scope trace has been detected, continue incrementing or decrementing MODULATION FREQ Hz Thumbwheels (25) in smaller increments until a clear Lissajou figure is visible. Continue until figure is stationary or moving as slowly as possible.

STEP PROCEDURE

18. Record present setting of MODULATION FREQ Hz Thumbwheels (25). Use table below to determine exact frequency of signal under test:

If frequency obtained in Step 11 was:	Multiply present setting of MODULATION FREQ Hz Thumbwheels (25) by corresponding number below to obtain exact frequency of signal under test:
5 Hz to 9999.9 kHz	1
10 kHz to 19.999 kHz	2
20 kHz to 29.999 kHz	3
30 kHz to 39.999 kHz	4
40 kHz to 49.999 kHz	5

1st ORDER	2nd ORDER	3rd ORDER	4th ORDER	5th ORDER
	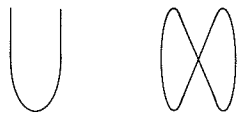	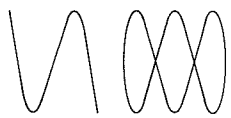	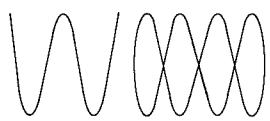	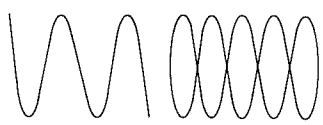
REFERENCE FREQUENCY EQUALS FREQUENCY UNDER TEST	REFERENCE FREQUENCY EQUALS HALF THE FREQUENCY UNDER TEST	REFERENCE FREQUENCY EQUALS ONE THIRD OF THE FREQUENCY UNDER TEST	REFERENCE FREQUENCY EQUALS ONE FOURTH OF FREQUENCY UNDER TEST	REFERENCE FREQUENCY EQUALS ONE FIFTH OF FREQUENCY UNDER TEST
	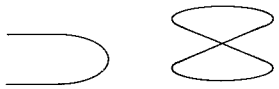	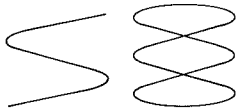	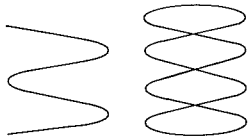	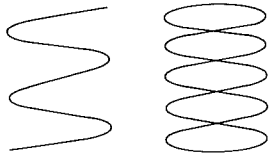
REFERENCE FREQUENCY EQUALS FREQUENCY UNDER TEST	REFERENCE FREQUENCY EQUALS TWICE THE FREQUENCY UNDER TEST	REFERENCE FREQUENCY EQUALS THREE TIMES THE FREQUENCY UNDER TEST	REFERENCE FREQUENCY EQUALS FOUR TIMES THE FREQUENCY UNDER TEST	REFERENCE FREQUENCY EQUALS FIVE TIMES THE FREQUENCY UNDER TEST

REFERENCE FREQUENCY = SETTING OF "MODULATION THUMBWHEELS"(25)
FREQUENCY UNDER TEST = SIGNAL APPLIED TO "SCOPE-IN CONNECTOR"(26)

FIGURE 4-12 LISSAJOU FIGURE REFERENCE CHART

4-2-8

TEST PROCEDURE: ***MEASURING PULSE DURATION AND DUTY CYCLE***

TEST OBJECTIVE: N/A

SPECIAL ACCESSORY EQUIPMENT REQ'D: N/A

TEST SET-UP DIAGRAM: N/A

STEP	PROCEDURE
1.	Set FM/AM-1000S controls for oscilloscope operation as shown in Figure 4-1, page 4-5.
2.	Apply power to FM/AM-1000S.
3.	Adjust INTENSITY Control (35) cw and FOCUS Control (37) appropriately to obtain a sharp visible trace display.

NOTE

- Warm-up time of CRT is approximately 30 seconds from a "cold" start-up; trace display will not become visible until CRT achieves warm-up.

4.	Adjust VERT Control (38) and HORIZ Control (36), to obtain a centered trace aligned along major horizontal axis.
5.	Apply power to UUT.
6.	Apply signal to be measured to a SCOPE IN Connector (26) using a scope probe or coax. If scope probe is used, make sure ground lead is attached to UUT ground.

CAUTION

- DO NOT APPLY MORE THAN 200 VOLTS (PEAK-TO-PEAK) TO SCOPE IN CONNECTOR (26).

7.	Adjust EXT V/DIV Control (31) and EXT V/DIV Vernier Control (30) to obtain a comfortable square wave display.
8.	Adjust SWEEP Control (27) to obtain a minimum number of pulses.

NOTE

- A minimum of two complete pulses must be displayed.

STEP	PROCEDURE
9.	Adjust HORIZ Control (36) so a "rising edge" of a given pulse is aligned with leftmost vertical axis. Adjust VERT Control (38) so "off-time" of pulse waveform is aligned along major horizontal axis. Display of pulse waveform should now appear as shown:

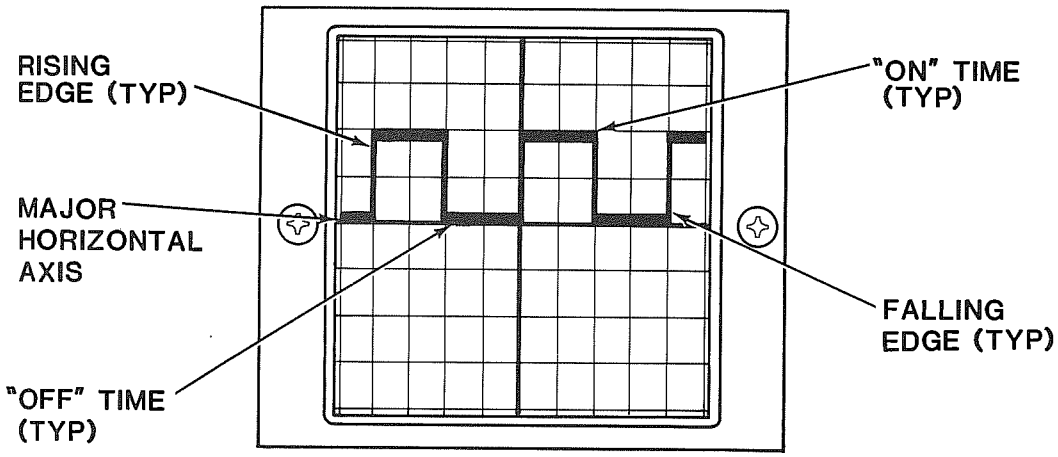

FIGURE 4-13 TYPICAL DISPLAY OF PULSE WAVEFORM

10. Count number of graticule divisions between rising edge of a given pulse and next falling edge; this distance represents time pulse is "ON."

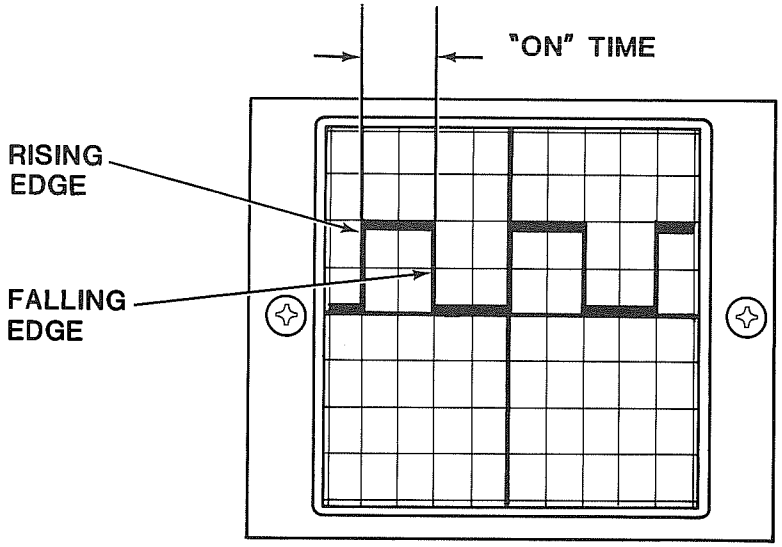

FIGURE 4-14 MEASURING "ON" TIME OF PULSE WAVEFORM

11. Multiply number of graticule divisions representing pulse "ON" time by setting of SWEEP Control (27). Record result.

STEP	PROCEDURE
12.	Count number of graticule divisions between rising edge of a given pulse and next rising edge; this distance represents pulse reccurence time (PRT).

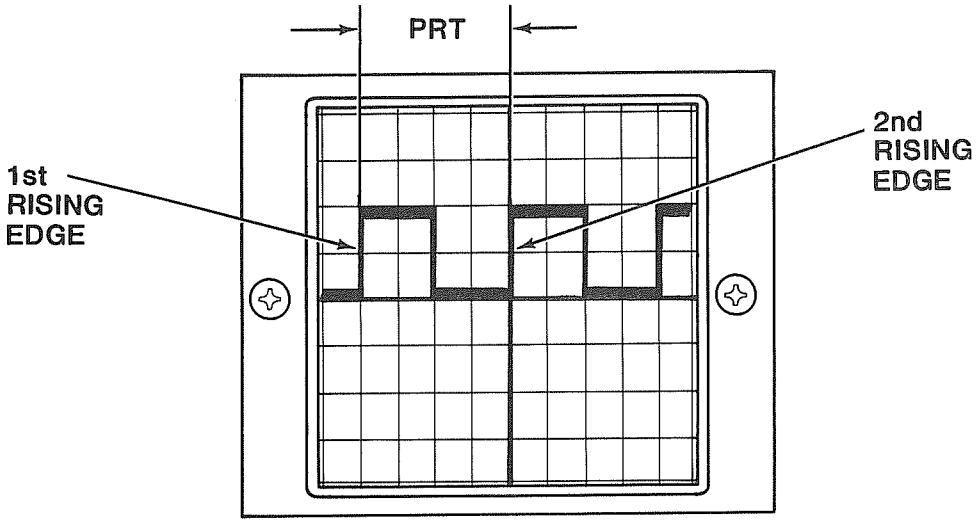

FIGURE 4-15 MEASURING PRT OF PULSE WAVEFORM

13.	Multiply number of graticule divisions representing "PRT" by setting of SWEEP Control (27). Record result.
14.	To determine duty cycle, apply results from Steps 11 and 13 to following formula:

$$\frac{\text{Result of Step 11}}{\text{Result of Step 13}} \times 100 = \%\ \text{DUTY CYCLE}$$

4-3 TEST PROCEDURES USING FM/AM-1000S SPECTRUM ANALYZER

4-3-1 GENERAL

The FM/AM-1000S spectrum analyzer can be used for:

1. Measuring received signal strength and frequency.
2. Displaying the frequency relationship between two or more signals.
3. Displaying the frequency distribution of a signal.
4. Detecting presence of modulation and unwanted or spurious signals.

The dynamic range of the analyzer is 70 dB, covering a range from -30 dBm to -100 dBm.

The test procedures contained in this section are:

4-3-3 MEASURING SIGNAL STRENGTH
4-3-4 DETECTING SPURIOUS SIGNALS

4-3-2 INITIAL FM/AM-1000S CONTROL SETTINGS FOR SPECTRUM ANALYZER OPERATION

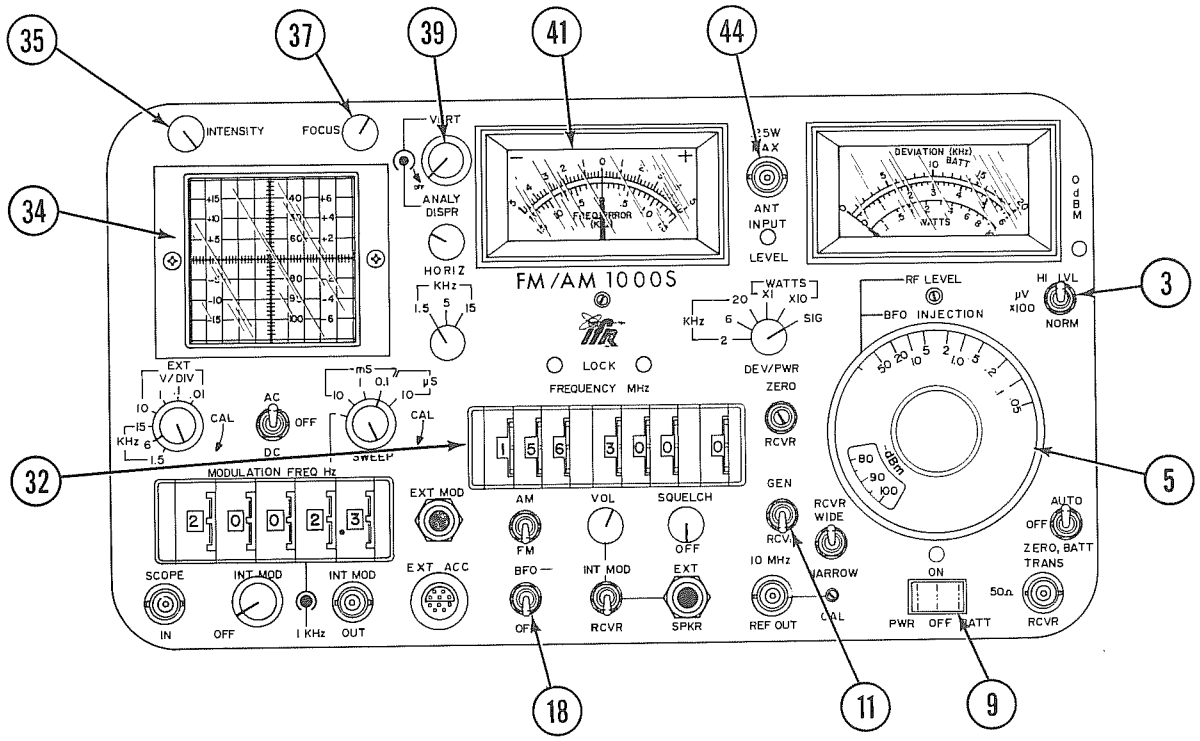

FIGURE 4-16 FM/AM-1000S CONTROLS APPLICABLE TO SPECTRUM ANALYZER OPERATION

(Refer to "SECTION 3 - DESCRIPTION OF CONTROLS, CONNECTORS & INDICATORS" for functional description of any controls used in this section.)

NOTE

- Before performing any procedures contained in this section pertaining to spectrum analyzer operation, make sure all applicable test set controls are positioned as outlined below.
- Some of the control settings outlined below may be changed during the course of a given procedure; all controls, however, should be reset to initial positions described below when starting a new procedure.

	CONTROL	INITIAL SETTING
3	HI LVL/μVx100/NORM Switch	"NORM" position
5	RF LEVEL/BFO INJECTION Dial	Fully ccw
9	PWR/OFF/BATT Switch	"OFF" position
11	GEN/RCVR Switch	"RECEIVER" position
18	BFO/OFF Switch	"OFF" position
35	INTENSITY Control	Midrange position
37	FOCUS Control	Midrange position
39	ANALY DISPR Control	Fully cw

4-3-2 INITIAL FM/AM-1000S CONTROL SETTINGS FOR SPECTRUM ANALYZER OPERATION (CONT'D)

Other FM/AM-1000S features related to spectrum analyzer operation, but not requiring an initial setting:

32 FREQUENCY MHZ Thumbwheels
34 CRT Display
41 FREQ ERROR Meter
44 ANT INPUT Connector

The FM/AM-1000S is now ready for spectrum analyzer operation.

4-3-3

TEST PROCEDURE: ***MEASURING SIGNAL STRENGTH***

TEST OBJECTIVE: N/A

SPECIAL ACCESSORY EQUIPMENT REQ'D: N/A

TEST SET-UP DIAGRAM: N/A

STEP	PROCEDURE
1.	Set FM/AM-1000S controls for spectrum analyzer operation as shown in Figure 4-16, page 4-33.
2.	Connect external antenna to ANT INPUT Connector (44).

CAUTION

- MAXIMUM CONTINUOUS INPUT TO THIS CONNECTOR MUST NOT EXCEED .25 W.
- MAXIMUM INPUT IS -30 dBm FOR PROPER SPECTRUM ANALYZER OPERATION (signals above -30 dBm may cause spurious signals to be generated and displayed by FM/AM-1000S.)
- IF AN EXTERNAL ANTENNA ATTACHED TO AN UNTERMINATED COAX CABLE IS USED, REMOVE ANY POSSIBLE STATIC CHARGE FROM ANTENNA COAX BEFORE CONNECTION TO FM/AM-1000S.

3. Apply power to FM/AM-1000S.

4. Adjust INTENSITY Control (35) cw and FOCUS Control (37) appropriately to obtain a sharp visible trace display.

NOTE

- Warm-up time of CRT is approximately 30 seconds from a "cold" start-up; trace display will not become visible until CRT achieves warm-up.

STEP	PROCEDURE
5.	Adjust FREQUENCY MHz Thumbwheels (32) so desired signal is aligned along major vertical axis on CRT. Signal to be measured is now on center frequency.

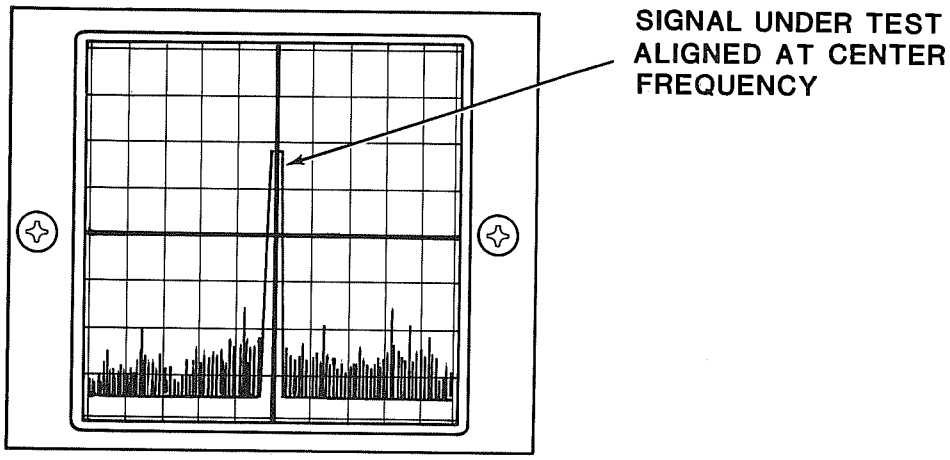

FIGURE 4-17 SIGNAL UNDER TEST DISPLAYED AT CENTER FREQUENCY

6. Rotate ANALY DISPR Control (39) fully ccw, short of detent position.

7. Again adjust FREQUENCY MHz Thumbwheels (32) so desired signal is aligned along major vertical axis on CRT.

8. Measure peak of displayed signal along vertical dB scale. Record measured result.

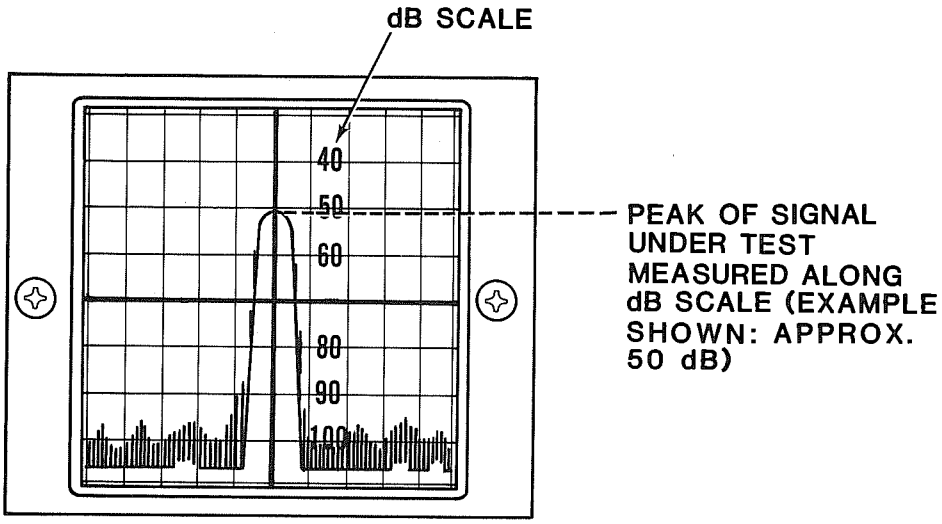

FIGURE 4-18 SIGNAL UNDER TEST MEASURED ALONG dB SCALE OF CRT

STEP	PROCEDURE
9.	Offset displayed signal to either side of major vertical axis two (2) major graticule divisions by incrementing or decrementing FREQUENCY MHz Thumbwheels (32).

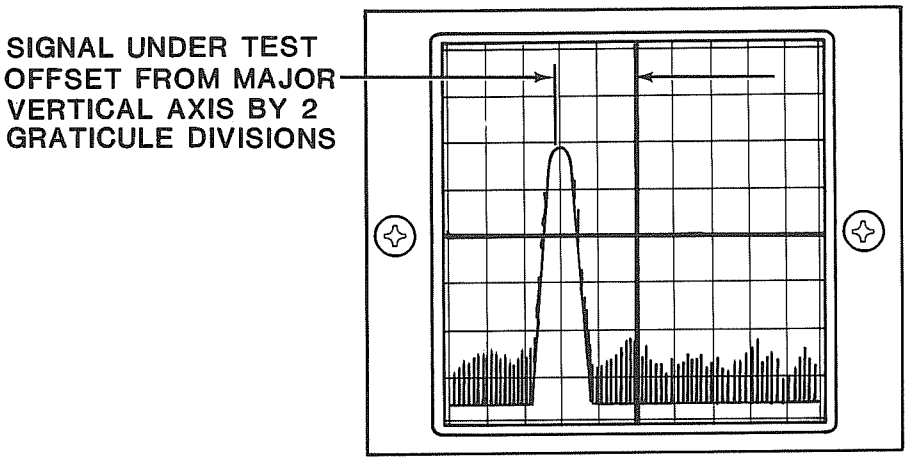

FIGURE 4-19 SIGNAL UNDER TEST OFFSET FROM MAJOR VERTICAL AXIS

10. Place BFO/OFF Switch (18) to "BFO" (ON) position.

11. Rotate RF LEVEL/BFO INJECTION Dial (5) cw so injected BFO signal is the same amplitude as signal under test.

NOTE

- If injected BFO signal cannot be raised to amplitude of signal under test, set HI LVL/µV X 100/ NORM Switch (3) to "µV x 100" position. Again rotate RF LEVEL/BFO INJECTION Dial (5) cw until injected BFO signal matches amplitude of signal under test.

STEP PROCEDURE

11. (cont'd)

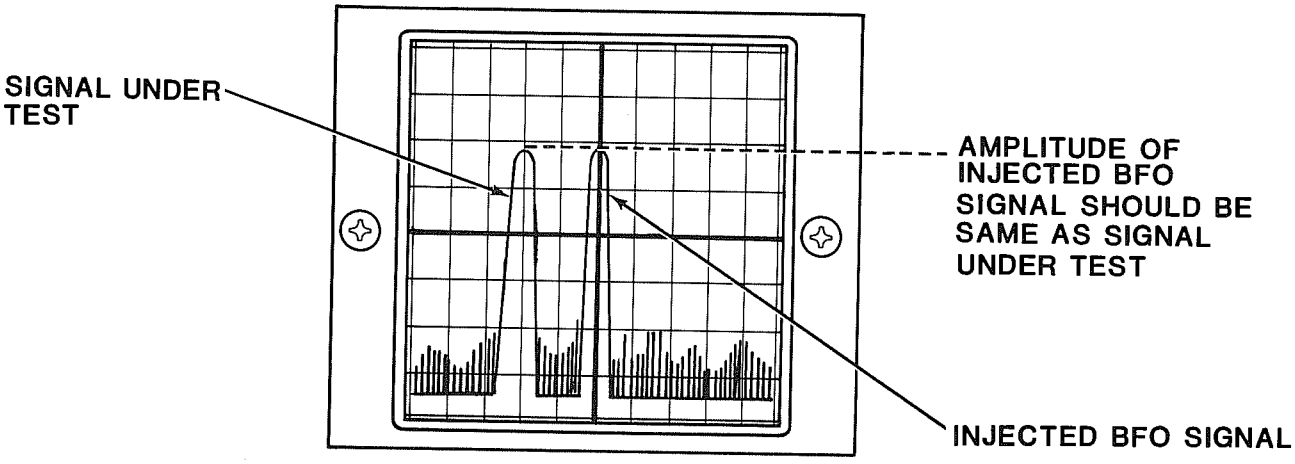

FIGURE 4-20 ADJUSTING INJECTED BFO SIGNAL TO SAME AMPLITUDE OF SIGNAL UNDER TEST

12. Read signal strength of signal under test on "µV" or "dBm" scales of RF LEVEL/BFO INJECTION Dial (5) as follows:

a. If HI LVL/µV X 100/NORM Switch (3) positioned to "NORM", setting of RF LEVEL/BFO INJECTION Dial (5) represents measured signal strength.

b. If HI LVL/µV X 100/NORM Switch (3) is positioned to "µV x 100" position, add +40 dBm to reading of RF LEVEL/BFO INJECTION Dial (5) on dBm scale to obtain true signal strength in dBm. For equivalent signal strength in "µV", multiply "µV" setting of RF LEVEL/BFO INJECTION Dial (5) by 100.

EXAMPLE:

(1) If RF LEVEL/BFO INJECTION Dial (5) reading is -100 dBm, obtain true signal strength as follows:

-100 dBm + (+40 dBm)=
-100 dBm + 40 dBm = -60 dBm

4-3-4

TEST PROCEDURE: ***DETECTING SPURIOUS SIGNALS***

TEST OBJECTIVE: N/A

SPECIAL ACCESSORY EQUIPMENT REQ'D: N/A

TEST SET-UP DIAGRAM: N/A

STEP	PROCEDURE
1.	Set FM/AM-1000S controls for spectrum analyzer operation as shown in Figure 4-16, page 4-33.
2.	Connect external antenna to ANT INPUT Connector (44) for "off-the-air" monitoring.

CAUTION

- MAXIMUM CONTINUOUS INPUT TO ANT INPUT Connector MUST NOT EXCEED .25 W.
- MAXIMUM INPUT TO ANT INPUT Connector IS -30 dBm FOR PROPER SPECTRUM ANALYZER OPERATION (signals above -30 dBm may cause spurious signals to be generated and displayed by FM/AM-1000S.)
- IF AN EXTERNAL ANTENNA ATTACHED TO AN UNTERMINATED COAX CABLE IS USED, REMOVE ANY POSSIBLE STATIC CHARGE FROM ANTENNA COAX BEFORE CONNECTION TO FM/AM-1000S.
- IF SIGNAL IS TO BE MONITORED THROUGH A UUT VIA A DIRECT CABLE CONNECTION TO TRANS/RCVR CONNECTOR (7), DO NOT APPLY MORE THAN 20 WATTS OF <u>CONTINUOUS</u> INPUT TO TRANS/RCVR CONNECTOR (7). Maximum "ON" time for measurement of transmitter output using TRANS/RCVR Connector is:

  10 seconds at 100 W, 15% Duty Cycle
  20 seconds at 50 W, 30% Duty Cycle
  2 minutes at 30 W, 50% Duty Cycle

3. Apply power to FM/AM-1000S.

4. Apply power to UUT (if applicable).

STEP PROCEDURE

5. Adjust INTENSITY Control (35) cw and FOCUS Control (37) appropriately for a sharp visible trace on CRT.

NOTE

- Warm-up time of CRT is approximately 30 seconds from a "cold" start-up; trace display will not become visible until CRT achieves warm-up.

6. Set FREQUENCY MHz Thumbwheels (32) to desired center frequency.

7. Momentarily shut off and re-apply power to UUT (or in case of a transmitter spectral purity check, key transmitter up and down), while carefully observing carrier signal and surrounding span for any spurious signals.

NOTE

- While interrupting power to UUT (or keying transmitter up and down) certain momentary spikes which protrude above the noise level may appear. Disregard these momentary spikes; look for signals which remain constant in amplitude during this time.

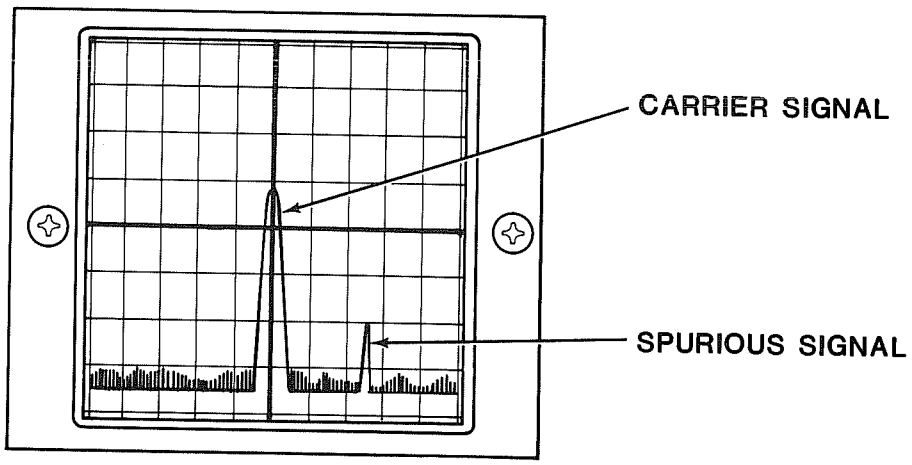

FIGURE 4-21 TYPICAL DISPLAY OF CARRIER SIGNAL AND ADJACENT SPURIOUS SIGNAL

8. To determine origin of spurious signal, increment or decrement 1 MHz and 100 kHz segments of FREQUENCY MHz Thumbwheels (32) several times above or below center frequency.

   a. If the spurious signal moves closer to or further away from carrier signal, spurious signal is being produced by FM/AM-1000S and thus can be disregarded.

STEP	PROCEDURE

8. (cont'd)

   b. If spurious signal moves in same direction and same distance as carrier signal, spurious signal is being produced by UUT.

9. To determine frequency of spurious signal.

   a. Increment or decrement the FREQUENCY MHz Thumbwheels (32), while rotating ANALY DISPR Control (39) ccw until the spurious signal is aligned with major vertical axis. Present setting of FREQUENCY MHz Thumbwheels (32) represents frequency of spurious signal.

NOTE

- ANALY DISPR Control (39) should be fully ccw, short of detent when final frequency reading is taken.
- To verify actual center of FM/AM-1000S Spectrum Analyzer when in wide dispersion (ANALY DISP Control fully cw), place GEN/RCVR Switch (11) to "GEN"position and observe generated signal:

  (1) If generated signal is aligned with major vertical axis, frequency of detected spurious signal is equal to setting of FREQUENCY MHz Thumbwheels (32).

  (2) If generated signal is not centered over major vertical axis, note position of generated signal on CRT graticule; place GEN/RCVR Switch (11) to "RCVR" position and increment or decrement FREQUENCY MHz Thumbwheels (32) to align spurious signal to same position to which generated signal was previously aligned. Setting of FREQUENCY MHz Thumbwheels (32) now represent frequency of detected spurious signal.

4-4 TEST PROCEDURES USING FM/AM-1000S DUAL TONE GENERATOR

4-4-1 GENERAL

The FM/AM-1000S contains a dual tone generator capable of generating an approximate 1 kHz fixed audio tone, as well as an audio tone that is variable between 10 Hz and 9999.9 Hz (in 0.1 Hz increments). In addition, an external tone input connector on the FM/AM-1000S front panel permits the introduction of a third audio tone from an external signal source. Using this feature, the operator can produce audio frequency signals suitable for:

1. Signaling or testing audio frequency equipment.
2. Amplitude or frequency modulating FM/AM-1000S signal generator output.
3. Frequency comparison.

The procedures contained in this section are:

4-4-3 GENERATING AUDIO TONES OF KNOWN AMPLITUDE
4-4-4 USING FM/AM-1000S SPEAKER TO ACCOUSTICALLY EXCITE A MICROPHONE

4-4-2 INITIAL FM/AM-1000S CONTROL SETTINGS FOR DUAL TONE GENERATOR OPERATION

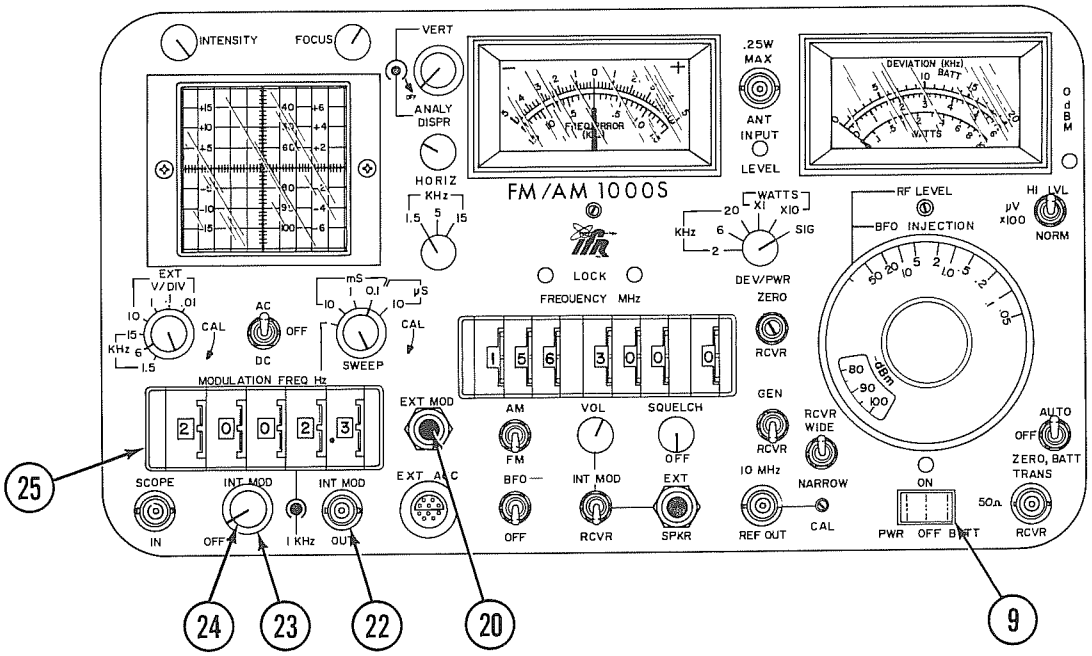

FIGURE 4-22 FM/AM-1000S CONTROLS APPLICABLE TO DUAL TONE GENERATOR OPERATION

(Refer to "SECTION 3 - DESCRIPTION OF CONTROLS, CONNECTORS & INDICATORS" for functional description of any controls used in this section.)

NOTE

- Before performing any procedures contained in this section pertaining to dual tone generator operation, make sure all applicable test set controls are positioned as outlined below.
- Some of the control settings outlined below may be changed during the course of a given procedure; all controls, however, should be reset to initial positions described below when starting a new procedure.

	CONTROL	INITIAL SETTING
9	PWR/OFF/BATT Switch	"OFF" position
23	INT MOD Control	Fully ccw, detent (OFF)
24	1 kHz INT MOD Control	Fully ccw, detent (OFF)
25	MODULATION FREQ MHz Thumbwheels	0000.0 Hz

4-4-2 INITIAL FM/AM-1000S CONTROL SETTINGS FOR DUAL TONE GENERATOR OPERATION (CONT'D)

Other FM/AM-1000S features related to dual tone generator operation, but not requiring an initial setting:

20 EXT MOD Connector
22 INT MOD OUT Connector

The FM/AM-1000S is now ready for dual tone generator operation.

TEST PROCEDURE: ***GENERATING AUDIO TONES OF KNOWN AMPLITUDE***

TEST OBJECTIVE: Setting up FM/AM-1000S dual tone generator for audio signal injection into UUT.

SPECIAL ACCESSORY EQUIPMENT REQ'D:

1 BNC "tee" connector.

1 short coax cable with male BNC connector on each end.

1 coax cable with male BNC connector on one end and UUT connector on opposite end.

TEST SET-UP DIAGRAM:

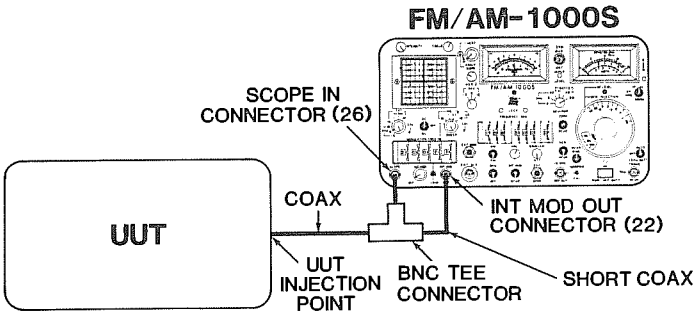

FIGURE 4-23 TEST SET-UP DIAGRAM FOR INJECTING TONE(S) OF KNOWN AMPLITUDE INTO A UUT

STEP	PROCEDURE
1.	Set FM/AM-1000S controls for oscilloscope operation as shown in Figure 4-1, page 4-5.
2.	Set FM/AM-1000S controls for dual tone generator operation as shown in Figure 4-22, page 4-45.
3.	Connect BNC "tee" connector to SCOPE IN Connector (26).
4.	Connect one end of short coax cable to INT MOD OUT Connector (22) and opposite end to BNC "tee" connector previously attached to SCOPE IN Connector (26).
5.	Apply power to UUT.
6.	Apply power to FM/AM-1000S.
7.	Adjust INTENSITY Control (35) cw and FOCUS Control (37) appropriately for a sharp visible trace display.

NOTE

- Warm-up time of CRT is approximately 30 seconds from a "cold" start-up; trace display will not become visible until CRT achieves warm-up.

STEP	PROCEDURE
8.	Adjust VERTICAL Control (38) and HORIZONTAL Control (36) so trace is centered and aligned along major horizontal axis.
9.	Set MODULATION FREQUENCY Hz Thumbwheels (25) to desired audio frequency.
10.	Connect BNC connector of remaining coax cable to "tee" connector attached to SCOPE IN Connector (26). Connect opposite end of coax cable to injection point on UUT.
11.	For calibration, injected audio tone must be expressed in volts peak. Signals expressed in volts RMS or volts peak-to-peak must therefore be converted to volts peak, using following formulas.

$$\text{VOLTS PEAK} = (1.414) \times (\text{VOLTS RMS})$$

$$\text{VOLTS PEAK} = \frac{\text{Volts peak-to-peak}}{2}$$

NOTE

- If desired audio level is below 4 volts peak, place EXT V/DIV Control to 1 V/DIV setting.

12. Rotate INT MOD Control (23) to adjust waveform display to desired amplitude in volts peak. Desired audio tone is now being injected into UUT.

EXAMPLE:

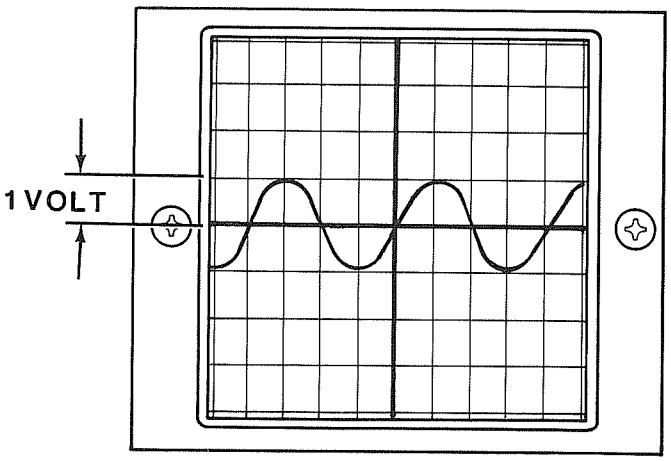

FIGURE 4-24 AMPLITUDE OF DISPLAYED WAVEFORM ADJUSTED 1 VOLT PEAK

13. To monitor the injected tones, place INT MOD/RCVR Switch (16) to "INT MOD" position and adjust VOL Control (17) to a comfortable listening level.

TEST PROCEDURE: ***USING FM/AM-1000S SPEAKER TO ACCOUSTICALLY EXCITE A MICROPHONE***

TEST OBJECTIVE: Exciting an external microphone with a sine wave of a known frequency.

SPECIAL ACCESSORY EQUIPMENT REQ'D: N/A

TEST SET-UP DIAGRAM: N/A

STEP	PROCEDURE
1.	Set FM/AM-1000S controls for dual tone generator operation as shown in Figure 4-22, page 4-45.
2.	Set MODULATION FREQ Hz Thumbwheels (25) for desired audio modulation tone.
3.	Place INT MOD/RCVR Switch (16) to "INT MOD" position.
4.	Rotate INT MOD Control (23) to a midrange position.
5.	Apply power to FM/AM-1000S.
6.	Adjust VOL Control (17) to a comfortable listening level.
7.	Apply power to UUT.
8.	Key UUT microphone while holding microphone next to FM/AM-1000S internal speaker (located on right side of FM/AM-1000S). Use FM/AM-1000S monitoring features to analyze UUT modulation capabilities.

4-5 TEST PROCEDURES USING FM/AM-1000S RF GENERATOR

4-5-1 GENERAL

The FM/AM-1000S signal generator is capable of generating calibrated amplitude signals from 100 Hz to 999.999 MHz (in 100 Hz increments).

NOTE

- When HI LVL/μV X 100/NORM Switch (3) is positioned to "HI LVL", RF output range is 50 kHz to 999.999 MHz.

The generator function can be used to stimulate external devices by generating unmodulated RF signals, AM modulated RF signals and FM modulated RF signals. The generator output may also be swept over a short frequency span for bandwidth testing of external devices.

The procedures contained in this section are:

4-5-3 GENERATING RF SIGNALS
4-5-4 GENERATING AM MODULATED RF SIGNALS
4-5-5 GENERATING FM MODULATED RF SIGNALS

4-5-2 INITIAL FM/AM-1000S CONTROL SETTINGS FOR RF GENERATOR OPERATION

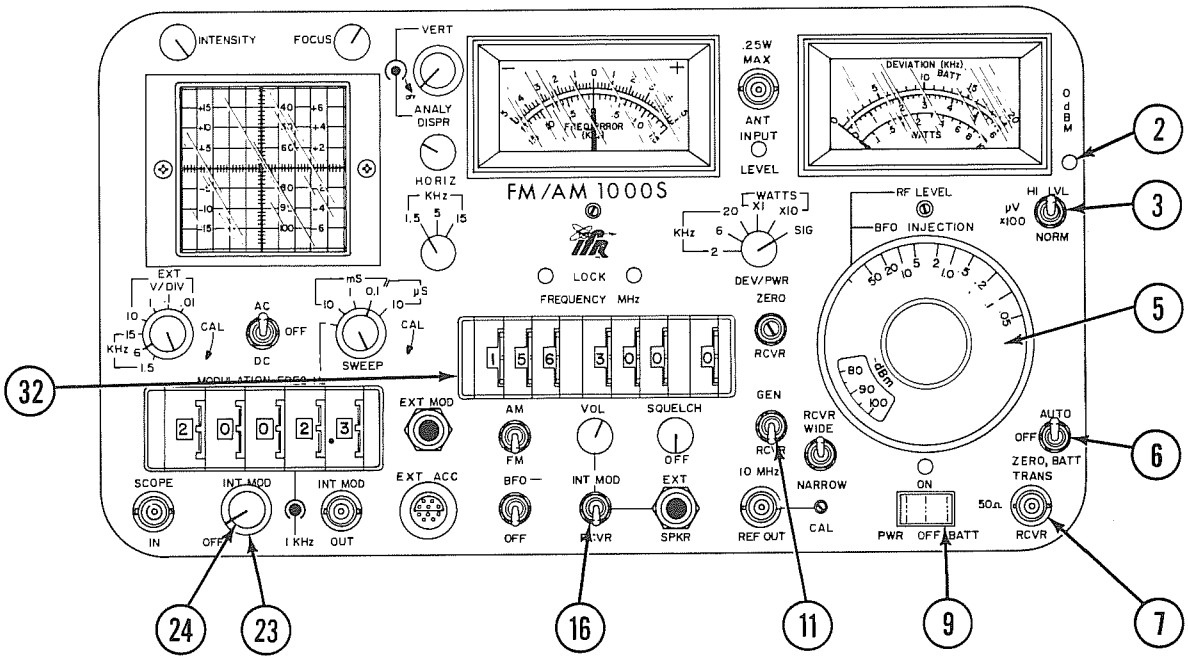

FIGURE 4-25 FM/AM-1000S CONTROLS APPLICABLE TO RF GENERATOR OPERATION

(Refer to "SECTION 3 - DESCRIPTION OF CONTROLS, CONNECTORS & INDICATORS" for functional description of any controls used in this section.)

NOTE

- Before performing any procedures contained in this section pertaining to RF generator operation, make sure all applicable test set controls are positioned as outlined below.
- Some of the control settings outlined below may be changed during the course of a given procedure; all controls, however, should be reset to initial positions described below when starting a new procedure.

	CONTROL	INITIAL SETTING
3	HI LVL/μV X 100/NORM Switch	"NORM" position
5	RF LEVEL/BFO INJECTION Dial	Fully ccw
6	AUTO/OFF/ZERO, BATT Switch	"AUTO" position
9	PWR/OFF/BATT Switch	"OFF" position
10	RCVR WIDE/MID/NARROW Switch	"NARROW" position
11	GEN/RCVR Switch	"GEN" position
16	INT MOD/RCVR Switch	"RCVR" position
23	INT MOD Control	Fully ccw, detent (OFF)
24	1 kHz INT MOD Control	Fully ccw, detent (OFF)

4-5-2 INITIAL FM/AM-1000S CONTROL SETTINGS FOR RF GENERATOR OPERATION

Other FM/AM-1000S features related to RF generator operation, but not requiring an initial setting:

2 0 dBm Lamp
7 TRANS/RCVR Connector
32 FREQUENCY MHz Thumbwheels

The FM/AM-1000S is now ready for RF generator operation.

4-5-3

TEST PROCEDURE: ***GENERATING RF SIGNALS***

TEST OBJECTIVE: N/A

SPECIAL ACCESSORY EQUIPMENT REQ'D: N/A

TEST SET-UP DIAGRAM: N/A

STEP	PROCEDURE
1.	Set FM/AM-1000S controls for RF generator operation as shown in Figure 4-25, page 4-53.
2.	Apply power to FM/AM-1000S.
3.	Set FREQUENCY MHz Thumbwheels (32) to desired RF frequency output.
4.	For an RF output less than 50 µV, rotate RF LEVEL/BFO INJECTION Dial (5) to desired "µV" setting.

NOTE

- RF output in dBm can be determined by reading setting of RF LEVEL/BFO INJECTION Dial (5) on dBm scale.

The FM/AM-1000S is now generating RF signals at desired frequency and output level.

5. For an RF output level greater than 50 µV (but less than 5000 µV):

   a. Place HI LEVEL/µV X 100/NORM Switch (3) to "µV x 100" position.

   b. Rotate RF LEVEL/BFO INJECTION Dial (5) to desired "µV" setting. The FM/AM-1000S is now generating RF signals at desired frequency and output level.

NOTE

- RF output level in "µV" is now 100 times the setting of RF LEVEL/BFO INJECTION Dial (5) on "µV" scale.

STEP PROCEDURE

5. (cont'd)

NOTE

- Equivalent RF output level in dBm can be determined by mathematically adding +40 dBm to reading of RF LEVEL/BFO INJECTION Dial (5) on dBm scale.

  EXAMPLE: RF output level as indicated on dial: -100 dBm

  -100 dBm + (+40 dBm) =
  -100 dBm + 40 dBm = -60 dBm output

6. For an RF output level greater than -35 dBm:

   a. Rotate RF LEVEL/BFO INJECTION Dial (5) fully ccw.

   b. Place HI LVL/µV X 100/NORM Switch (3) to "HI LVL" position.

   c. Slowly rotate RF LEVEL/BFO INJECTION Dial (5) cw until 0 dBm Lamp (2) illuminates.

   d. Record setting of RF LEVEL/BFO INJECTION Dial (5) on dBm scale.

   e. Add result obtained in Step 6d to desired RF output level in dBm. Record result.

   f. Rotate RF LEVEL/BFO INJECTION Dial (5) to setting obtained in Step 6e.

   g. The FM/AM-1000S is now generating RF signals at desired frequency and output level.

   EXAMPLE:

   (1) Desired RF output level: -25 dBm

   (2) RF LEVEL/BFO INJECTION Dial (5) setting when 0 dBm Lamp (2) illuminates: -75 dBm

   (3) Add (1) to (2): (-25) + (-75) = -100 dBm

   (4) Rotate RF LEVEL/BFO INJECTION Dial (5) to -100 dBm; RF output level of FM/AM-1000S is now -25 dBm.

TEST PROCEDURE: ***GENERATING AM MODULATED RF SIGNALS***

TEST OBJECTIVE: N/A

SPECIAL ACCESSORY EQUIPMENT REQ'D: N/A

TEST SET-UP DIAGRAM: N/A

STEP	PROCEDURE
1.	Perform procedure 4-5-3, titled "GENERATING RF SIGNALS", on page 4-55.
2.	Place AM/FM Switch (19) to "AM."
3.	Set "MODULATION FREQ Hz Thumbwheels (25) to desired tone modulation frequency.
4.	Rotate ANALY DISPR Control (39) fully ccw to detent position.
5.	Place EXT V/DIV Control (31) to "1.5 kHz", "6 kHz" or "15 kHz" position.
6.	Rotate EXT V/DIV Vernier Control (30) to "CAL" position.
7.	Adjust INTENSITY Control (35) cw and FOCUS Control (37) appropriately for a sharp visible trace display.
8.	Adjust VERT Control (38) and HORIZ Control (36) to obtain a centered trace, with lower edge of displayed carrier aligned with major horizontal axis.

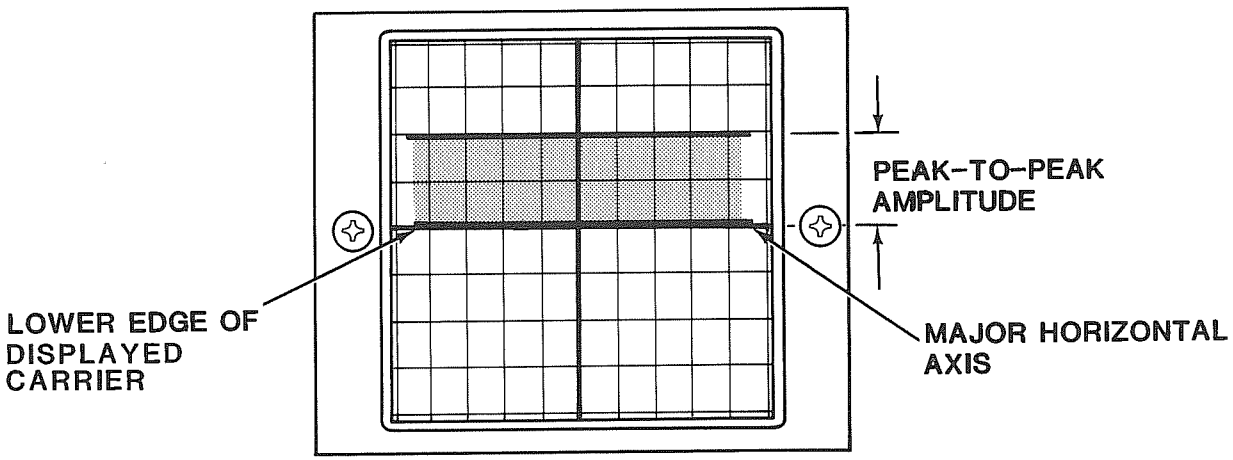

FIGURE 4-26 DISPLAYED CARRIER ALIGNED WITH LOWER EDGE RESTING ON MAJOR HORIZONTAL AXIS

STEP	PROCEDURE
9.	Measure peak-to-peak amplitude (in graticule divisions) of displayed carrier. Record result.
10.	Apply result obtained in Step 9 to the following equation:

$$x = \frac{(\text{desired \% modulation}) \times (\text{result of Step 9})}{100}$$

where x = number of graticule divisions (peak-to-peak) of modulated signal.

11. a. Adjust VERTICAL Control (38) to align negative peak of one of the modulated signals with the major horizontal axis.

b. Rotate INT MOD Control (23) to adjust peak-to-peak amplitude of the same modulated signal (in graticule divisions) to the value of "x" obtained in Step 10.

NOTE

- Steps 11a and 11b must be performed simultaneously, as both are interactive.

EXAMPLES:

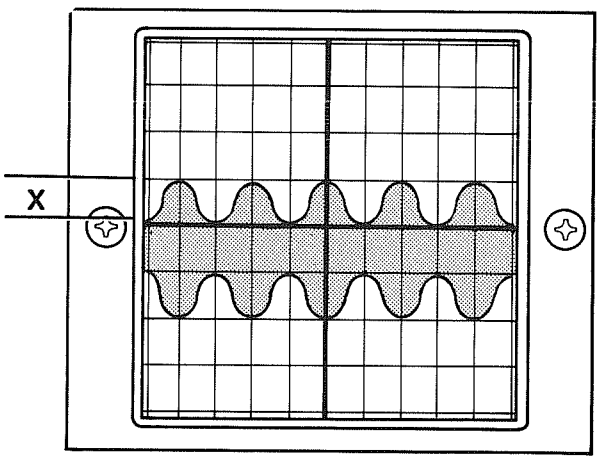

DISPLAYED WAVEFORM WITH UPPER MODULATED SIGNAL ALIGNED ALONG MAJOR HORIZONTAL AXIS

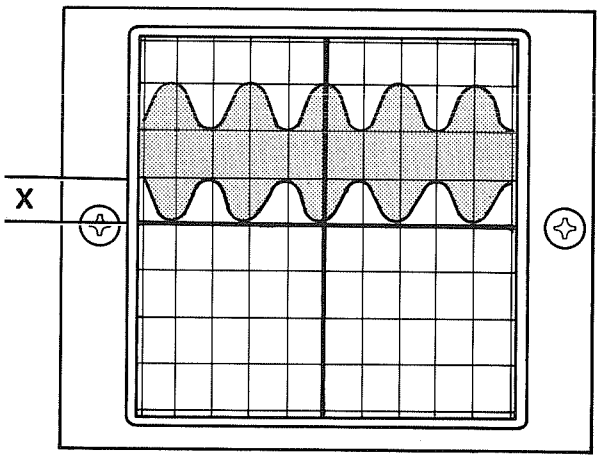

DISPLAYED WAVEFORM WITH LOWER MODULATED SIGNAL ALIGNED ALONG MAJOR HORIZONTAL AXIS

FIGURE 4-27 ALIGNMENT OF UPPER & LOWER MODULATION SIGNALS WITH MAJOR HORIZONTAL AXIS

c. The FM/AM-1000S signal generator is now calibrated to desired percent modulation and is generating at selected frequency and output level.

4-5-5

TEST PROCEDURE: ***GENERATING FM MODULATED RF SIGNALS***

TEST OBJECTIVE: N/A

SPECIAL ACCESSORY EQUIPMENT REQ'D: N/A

TEST SET-UP DIAGRAM: N/A

STEP	PROCEDURE
1.	Perform procedure 4-5-3, titled "GENERATING RF SIGNALS", on page 4-55.
2.	Place AM/FM Switch (19) to "FM."
3.	Set MODULATION FREQ Hz Thumbwheels (25) to desired tone modulation frequency.
4.	Place DEV/PWR Control (47) to desired deviation range (2, 6 or 20 kHz).
5.	Rotate INT MOD Control (23) cw while observing DEVIATION/WATTS Meter (1) until meter indicates desired deviation on appropriate scale.

NOTE

- If deviation is above 5 kHz, place RCVR WIDE/MID/NARROW Switch (10) to "MID" or "WIDE" position.
- Signals at a 1 kHz rate with more than ±5 kHz deviation must be monitored with RCVR WIDE/MID/NARROW Switch (10) in "MID" position.
- Signals modulated above 2 kHz should be monitored with RCVR WIDE/MID/NARROW Switch (10) in "WIDE" position. Note residual modulation indication due to noise on DEVIATION/WATTS Meter (1); add this value to desired value. Total represents indicated deviation value on DEVIATION/WATTS Meter (1).

The FM/AM-1000S is now generating FM modulated RF signals within desired deviation range.

4-6 TEST PROCEDURES USING FM/AM-1000S RECEIVER

4-6-1 GENERAL

The FM/AM-1000S contains a sensitive AM/FM communications receiver capable of receiving signals within a range of 300 kHz to 999.999 MHz (in 100 Hz increments). The receiver function enables the operator to measure the characteristics of most radiated signals, including CW and SSB.

The procedures contained in this section are:

4-6-3 RECEIVING AM OR FM SIGNALS
4-6-4 RECEIVING SIDEBAND SIGNALS
4-6-5 RECEIVING CW SIGNALS
4-6-6 RECEIVING TIME STANDARD SIGNAL TO CALIBRATE FM/AM-1000S MASTER OSCILLATOR.
4-6-7 CALIBRATING FM/AM-1000S MASTER OSCILLATOR THROUGH AN EXTERNAL FREQUENCY STANDARD.

4-6-2 INITIAL FM/AM -1000S CONTROL SETTINGS FOR RECEIVER OPERATION

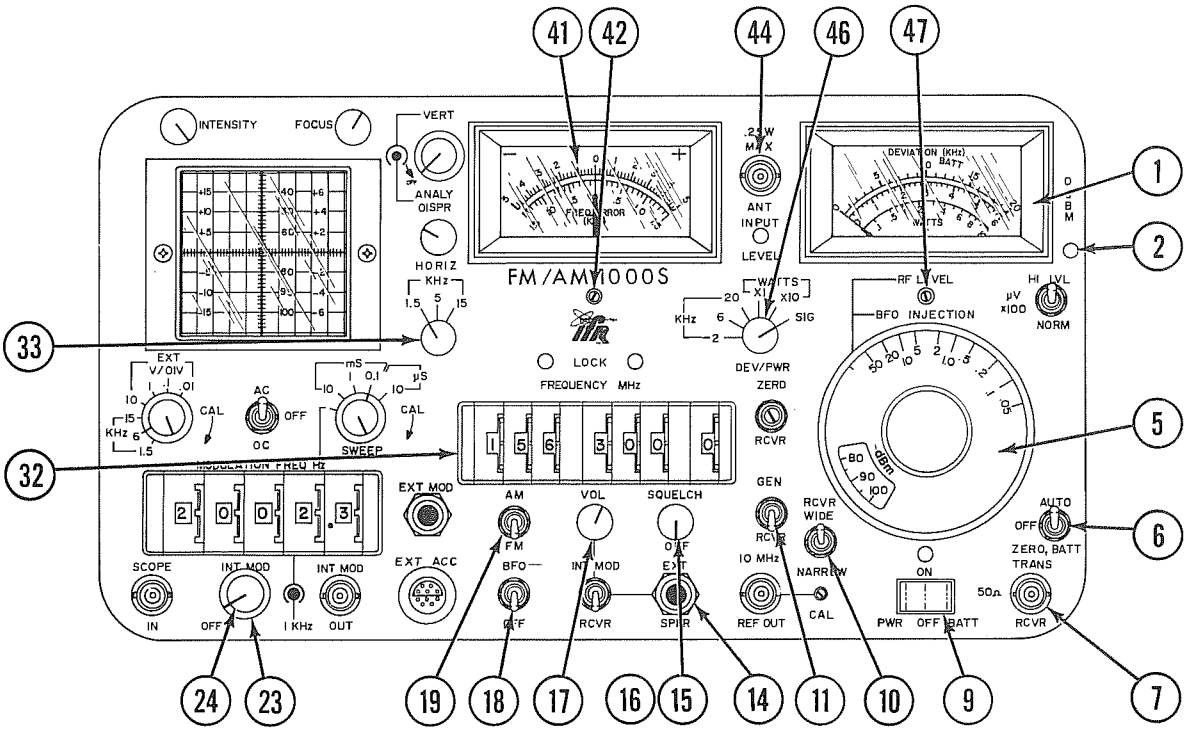

FIGURE 4-28 FM/AM-1000S CONTROLS APPLICABLE TO RECEIVER OPERATION

(Refer to "SECTION 3 - DESCRIPTION OF CONTROLS, CONNECTORS & INDICATORS" for functional description of any controls used in this section.)

NOTE

- Before performing any procedures contained in this section pertaining to receiver operation, make sure all applicable test set controls are positioned as outlined below.
- Some of the control settings outlined below may be changed during the course of a given procedure; all controls, however, should be reset to initial positions described below when starting a new procedure.

	CONTROL	INITIAL SETTING
5	RF LEVEL/BFO INJECTION Dial	Fully ccw
6	AUTO/ZERO/OFF/ZERO, Batt Switch	"AUTO" position
9	POWER/OFF/BATT Switch	"OFF" position
10	RCVR WIDE/MID/NARROW Switch	"WIDE" position
11	GEN/RCVR Switch	"RECEIVER" position
15	SQUELCH Control	Fully ccw, short of detent
16	INT MOD/RCVR Switch	"RECEIVER" position
17	VOL Control	Fully ccw
18	BFO/OFF Switch	"OFF" position

4-6-2 INITIAL FM/AM-1000S CONTROL SETTINGS FOR RECEIVER OPERATION (CONT'D)

	CONTROL	INITIAL SETTING
19	AM/FM Switch	"AM" or "FM" position depending on mode of signal to be received.
23	INT MOD Control	Fully ccw, detent (OFF)
24	1 kHz INT MOD Control	Fully ccw, detent (OFF)
33	1.5/5/15 kHz Control	"15 kHz" position
47	DEV/PWR Control	"SIG" position

Other FM/AM-1000S features related to receiver operation, but not requiring an initial setting:

1 DEVIATION/WATTS Meter
4 ZERO RCVR Adjustment
7 TRANS/RCVR Connector
14 EXT SPKR Connector
32 FREQUENCY MHz Thumbwheels
41 FREQ ERROR Meter
42 FREQ ERROR Meter Zero Adjustment
44 ANT INTPUT Connector
47 DEVIATION/WATTS Meter Zero Adjustment

The FM/AM-1000S is now ready for receiver operation.

4-6-3

TEST PROCEDURE: ***RECEIVING AM OR FM SIGNALS***

TEST OBJECTIVE: N/A

SPECIAL ACCESSORY EQUIPMENT REQ'D: N/A

TEST SET-UP DIAGRAM: N/A

STEP	PROCEDURE
1.	Set FM/AM-1000S controls for receiver operation as shown in Figure 4-28, page 4-63.
2.	Place AM/FM Switch (19) to desired signal mode position.
3.	Select desired method for signal reception:

a. External Antenna
Connect external antenna to ANT INPUT Connector (44) for "off-the-air" monitoring.

CAUTION

- MAXIMUM CONTINUOUS INPUT TO THIS CONNECTOR MUST NOT EXCEED .25 W.
- MAXIMUM INPUT IS -30 dBM FOR PROPER SPECTRUM ANALYZER OPERATION (SIGNALS ABOVE -30 dBm MAY CAUSE SPURIOUS SIGNALS TO BE GENERATED AND DISPLAYED BY FM/AM-1000S.)
- IF AN EXTERNAL ANTENNA ATTACHED TO AN UNTERMINATED COAX CABLE IS USED, REMOVE ANY POSSIBLE STATIC CHARGE FROM ANTENNA COAX BEFORE CONNECTING TO FM/AM-1000S.

b. Direct Cable Connection from UUT
Connect cable from UUT to TRANS/RCVR Connector (7).

CAUTION

- DO NOT APPLY MORE THAN 20 WATTS OF CONTINUOUS INPUT TO TRANS/RCVR CONNECTOR (7).
- Maximum "ON" time for measurement of transmitter output using TRANS/RCVR Connector (7) is:

  10 seconds at 100 W, 15% Duty Cycle
  20 seconds at 50 W, 30% Duty Cycle
  2 minutes at 30 W, 50% Duty Cycle

STEP	PROCEDURE
4.	Apply power to FM/AM-1000S.
5.	Apply power to UUT (if applicable).
6.	Set FREQUENCY MHz Thumbwheels (32) to frequency of signal to be received.
7.	Adjust VOL Control (17) to a comfortable listening level.
8.	If an area of the spectrum is being monitored where frequency channels are packed closely together, bandwidth of signal may be reduced by placing RCVR WIDE/MID/NARROW Switch (10) to "MID" or "NARROW" setting.

NOTE

- "NARROW" setting of RCVR WIDE/MID/NARROW Switch (10) will not accommodate greater than ±5 kHz FM deviation of most FM transmitters, when monitoring FM signals. If FM deviation is more than ±5 kHz, place RCVR WIDE/MID/NARROW Switch to "MID" position.

9. Fine tuning of FM/AM-1000S receiver to center frequency (within ±100 Hz) is accomplished as follows:

   a. If FREQ ERROR Meter (41) appears centered at zero, proceed to Step 9b; if meter needle is not centered, increment or decrement FREQUENCY MHz Thumbwheels (32) in 10 kHz and 1 kHz steps to center needle as closely as possible to zero, then proceed to Step 9b.

   b. Rotate 1.5/5/15 kHz Control (33) to "5 kHz" position. If FREQ ERROR Meter (41) remains centered at zero, proceed to Step 9c; if meter needle deviates from zero, increment or decrement FREQUENCY MHz Thumbwheels (32) in 1 kHz steps to center needle as closely as possible to zero, then proceed to Step 9c.

   c. Rotate 1.5/5/15 kHz Control (33) to "1.5 kHz" position. Increment or decrement FREQUENCY MHz Thumbwheels (32) in 100 Hz steps until meter needle is centered at zero (within ±1 minor division on meter scale). Setting of FREQUENCY MHz Thumbwheels (32) now reflects exact frequency of received signal.

10. Place SQUELCH Control (15) fully ccw, short of detent or as required.

STEP	PROCEDURE
11.	If received signal is being monitored through a direct cable connection at TRANS/RCVR Connector (7), rotate DEV/PWR Control (47) to "Watts x 10" position. If DEVIATION/WATTS Meter (1) reading is under 10 watts (on red scale), rotate DEV/PWR Control (47) to "Watts x 1" position.
12.	Output power of UUT can now be measured on red scale of DEVIATION/WATTS Meter (1).

NOTE

- For signals received "off-the-air", a qualitative representation of relative signal strength can be determined by observing DEVIATION/WATTS Meter (1) needle deflection (with DEV/PWR Control Control (47) in "SIG" position). As signal strength increases, the meter needle deflection will increase towards right of meter scale. For exact measurement of "off-the-air" signal strength, refer to procedure 4-3-3, titled "MEASURING SIGNAL STRENGTH" on page 4-35.

4-6-4

TEST PROCEDURE: ***RECEIVING SIDEBAND SIGNALS***

TEST OBJECTIVE: N/A

SPECIAL ACCESSORY EQUIPMENT REQ'D: N/A

TEST SET-UP DIAGRAM: N/A

STEP	PROCEDURE
1.	Perform procedure 4-6-3, titled "RECEIVING AM or FM SIGNALS" on page 4-65.
2.	Place BFO/OFF Switch (18) to "BFO" (ON) position.
3.	Rotate RF LEVEL/BFO INJECTION Dial (5) cw until sideband becomes understandable.
4.	Increment or decrement FREQUENCY MHz Thumbwheels (32) in 100 Hz steps as necessary to "clarify" signal.

NOTE

- Excessive BFO quiets the receiver and depresses audio output, while insufficient BFO causes distortion.

4-6-5

TEST PROCEDURE: ***RECEIVING CW SIGNALS***

TEST OBJECTIVE: N/A

SPECIAL ACCESSORY EQUIPMENT REQ'D: N/A

TEST SET-UP DIAGRAM: N/A

STEP	PROCEDURE
1.	Perform all steps of procedure 4-6-3, titled "RECEIVING AM or FM SIGNALS" on page 4-65, with exception of Step 7, which is to be disregarded.
2.	Place BFO/OFF Switch (18) to "BFO" (ON) position.
3.	Place AM/FM Switch (19) to "AM" position.
4.	Increment or decrement FREQUENCY MHz Thumbwheels (32) 1 kHz or as desired.
5.	Rotate RF LEVEL/BFO INJECTION Dial (5) and VOL Control (17) cw simultaneously until beat frequency becomes audible.

4-6-6

TEST PROCEDURE: ***RECEIVING TIME STANARD SIGNAL TO CALIBRATE FM/AM-1000S MASTER OSCILLATOR***

TEST OBJECTIVE: N/A

SPECIAL ACCESSORY EQUIPMENT REQ'D: 1 small flatblade screwdriver

1 short length of wire (18 ga.)

TEST SET-UP DIAGRAM: N/A

STEP	PROCEDURE
1.	Perform procedure 4-6-3, titled "RECEIVING AM OR FM SIGNALS" on page 4-65.

NOTE

- AM/FM Switch (19) should be in "AM" position.
- Frequency to be received is 10.000 MHz (WWV Time Standard Radio Station.)
- DEV/PWR Control (47) should be in "SIG" position.

2. Set FM/AM-1000S controls for oscilloscope operation as shown in Figure 4-1, page 4-5.

3. Rotate EXT V/DIV Switch (31) to "15 kHz" position.

4. Insert a short length of wire into center conductor of 10 MHz REF OUT Connector (13).

5. Adjust position of wire to obtain a suitable beat note from FM/AM-1000S speaker.

6. Using small screwdriver, rotate 10 MHz CAL Adjustment (12) appropriately until beat note achieves as low a frequency as possible:

   a. Initially, it will be helpful to observe oscillation of waveform on oscilloscope while rotating 10 MHz CAL Adjustment (12); rotate screw until oscillation diminishes to a point of being as close as possible to stationary.

STEP	PROCEDURE

6. (cont'd)

b. Continue adjustment of 10 MHz CAL Adjustment (12) while observing DEVIATION/WATTS Meter (1) until meter needle oscillation becomes as slow as possible. During this step, recheck oscilloscope display to make sure waveform remains stable. Master oscillator of FM/AM-1000S is now calibrated in accordance with WWV.

NOTE

- Careful calibration can result in a beat frequency less than 0.1 Hz.
- The needle indication described in Step 6b may not occur if the WWV transmitter is in close proximity to the FM/AM-1000S.

7. In addition to calibrating the FM/AM-1000S master oscillator for accurate frequency reference/measurement, the FM/AM-1000S FREQ ERROR Meter (41) should also be zeroed for reliable frequency measurements. Procedure is as follows:

a. Place GEN/RCVR Switch (11) to "GEN" position.

NOTE

- RCVR WIDE/MID/NARROW Switch (10) must be in "NARROW" position.

b. Make sure AUTO/OFF/ZERO, BATT Switch (6) is in "AUTO" position.

c. Rotate 1.5/5/15 kHz Control (33) to "1.5 kHz" position.

d. Adjust ZERO RCVR Adjustment (4) cw or ccw to center FREQ ERROR Meter (41) needle at zero.

4-6-7

TEST PROCEDURE: ***CALIBRATING FM/AM-1000S MASTER OSCILLATOR THROUGH AN EXTERNAL FREQUENCY STANDARD***

TEST OBJECTIVE: Alternate procedure for calibrating FM/AM-1000S master oscillator through an external source (e.g. frequency counter) when a 10 MHz "off-the-air" reference signal is not available.

SPECIAL ACCESSORY EQUIPMENT REQ'D: 1 Coax cable with male BNC connector on each end

1 Frequency Counter

TEST SET-UP DIAGRAM:

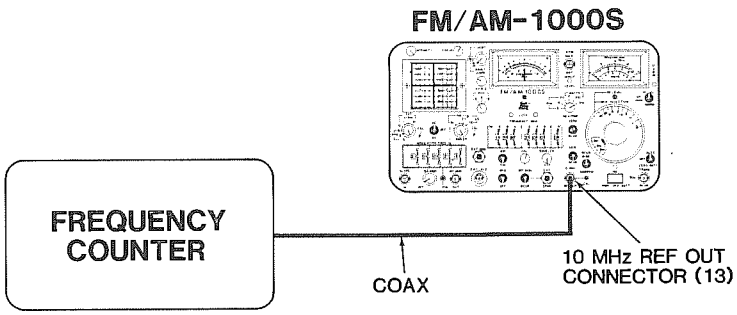

FIGURE 4-29 TEST SET-UP DIAGRAM FOR CALIBRATING FM/AM-1000S MASTER OSCILLATOR

STEP	PROCEDURE
1.	Connect one end of coax cable to 10 MHz REFERENCE OUT Connector (13).
2.	Connect opposite end of coax cable to input of frequency counter.
3.	Apply power to frequency counter.
4.	Apply power to FM/AM-1000S.
5.	For most precise adjustment, wait approximately 5 minutes before proceeding with Step 6.
6.	Adjust 10 MHz CAL Adjustment (12) until frequency counter reads 10 MHz, ±1 Hz. FM/AM-1000S master oscillator is now calibrated to frequency counter.

STEP	PROCEDURE
7.	In addition to calibrating the FM/AM-1000S master oscillator for accurate frequency reference/measurement, the FM/AM-1000S FREQ ERROR Meter (41) should also be zeroed for reliable frequency measurements. Procedure is as follows:

a. Place GEN/RCVR Switch (11) to "GEN" position.

NOTE

- RCVR WIDE/MID/NARROW Switch (10) must be in "NARROW" position.

b. Make sure AUTO/OFF/ZERO, BATT Switch (6) is in "AUTO" position.

c. Rotate 1.5/5/15 kHz Control (33) to "1.5 kHz" position.

d. Adjust ZERO RCVR Adjustment (4) cw or ccw to center FREQ ERROR Meter (41) needle at zero.

4-7 TEST PROCEDURES USING FM/AM-1000S AS A SWEEP GENERATOR /TRACKING OSCILLOSCOPE

4-7-1 GENERAL

The RF output of the FM/AM-1000S signal generator can be caused to sweep by as much as ±20 kHz. Since the horizontal scan of the FM/AM-1000S is synchronized to the dual tone generator output, the FM/AM-1000S oscilloscope can be used to track the swept RF signal output. This permits direct viewing of filter, crystal and tuned circuit response curves on the FM/AM-1000S oscilloscope.

IMPORTANT CONSIDERATIONS APPLICABLE TO PROCEDURES CONTAINED IN THIS SECTION:

- When using FM/AM-1000S as a Sweep Generator/Tracking Oscilloscope, frequency display on CRT is inverted; i.e. frequency is maximum on left side of CRT and minimum on right side of CRT.
- Certain circuits exhibiting severe attenuation may not provide sufficient detector output to obtain necessary scope deflection.
- A circuit under test must be highly selective to show a response curve within the 40 kHz displayed span.
- High impedance (Hi-Z) circuits should be monitored using a detector probe.
- When testing knotch, highpass and lowpass circuits, best results are normally obtained at or near 0 dBm output. If smaller levels are required, use maximum output with HI LVL/μV X 100/NORM Switch (3) in "μV X 100" position.
- DC blocking capacitors are required only for active circuits.
- If circuit under test (CUT) is an amplifier, make sure amplifier:

  (1) is terminated with proper load impedance.
  (2) power out does not exceed detector parameters.
  (3) is not saturated.

The test procedures contained in this section are:

4-7-3 USING FM/AM-1000S AS A SWEEP GENERATOR/ TRACKING OSCILLOSCOPE
4-7-4 MEASURING BANDPASS AND CENTER FREQUENCY OF A BANDPASS CIRCUIT
4-7-5 MEASURING BANDREJECT AND CENTER FREQUENCY OF KNOTCH CIRCUITS
4-7-6 MEASURING CUT-OFF FREQUENCY OF LOWPASS CIRCUITS
4-7-7 MEASURING CUT-OFF FREQUENCY OF HIGHPASS CIRCUITS

4-7-2 INITIAL FM/AM-1000S CONTROL SETTING FOR SWEEP GENERATOR/ TRACKING OSCILLOSCOPE OPERATION

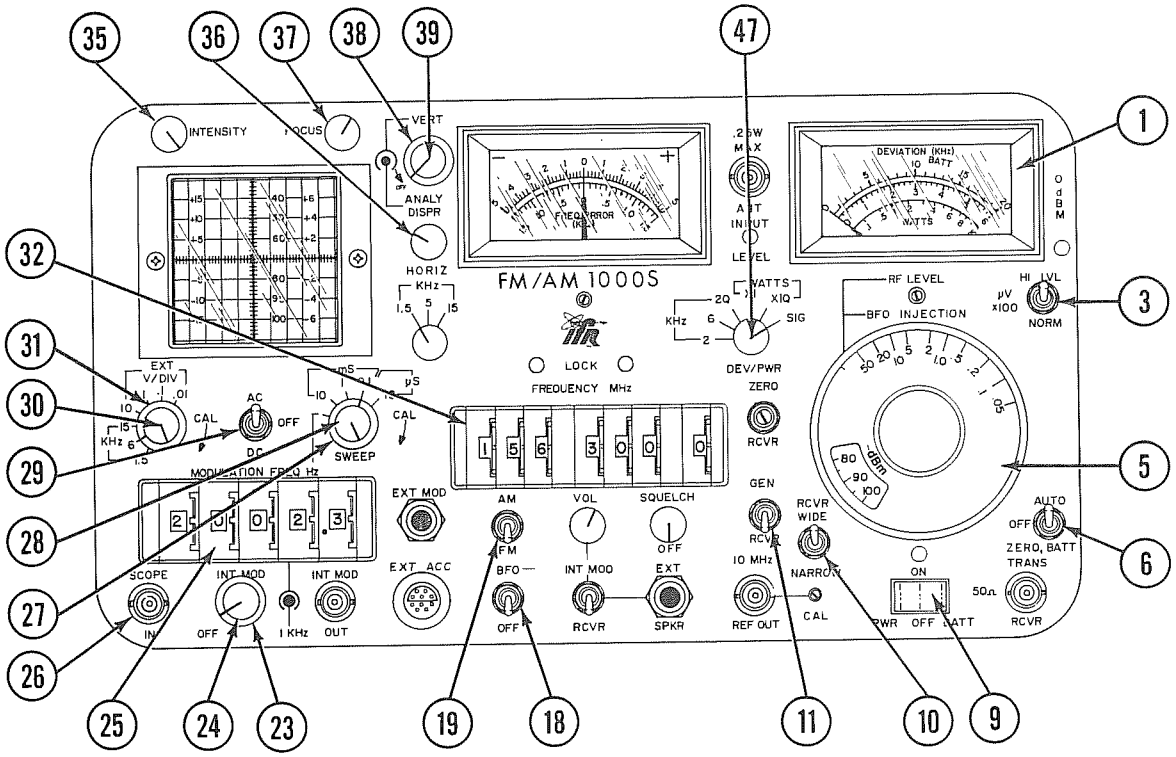

FIGURE 4-30 FM/AM-1000S CONTROLS APPLICABLE TO SWEEP GENERATOR/ TRACKING OSCILLOSCOPE OPERATION

(Refer to "SECTION 3 - DESCRIPTION OF CONTROLS, CONNECTORS & INDICATORS" for functional description of any controls used in this section.)

NOTE

- Before performing any procedures contained in this section pertaining to sweep generator/tracking oscilloscope operation, make sure all applicable test set controls are positioned as outlined below.
- Some of the control settings outlined below may be changed during the course of a given procedure; all controls, however, should be reset to initial positions described below when starting a new procedure.

	CONTROL	INITIAL SETTING
3	HI LVL/μV X 100/NORM Switch	"HI LVL" position
5	RF LEVEL/BFO INJECTION Dial	Fully ccw
6	AUTO/OFF/ZERO, BATT Switch	"AUTO" position
9	PWR/OFF/BATT Switch	"OFF" position
10	RCVR WIDE/MID/NARROW Switch	"MID" position
11	GEN/RCVR Switch	"GEN" position
18	BFO/OFF Switch	"OFF" position
19	AM/FM Switch	"FM" position
23	INT MOD Control	Fully ccw, detent (OFF)

4-7-2 INITIAL FM/AM-1000S CONTROL SETTINGS FOR SWEEP GENERATOR/ TRACKING OSCILLOSCOPE OPERATION (CONT'D)

	CONTROL	INITIAL SETTING
24	1 kHz INT MOD Control	Fully ccw, detent (OFF)
25	MODULATION FREQ Hz Thumbwheels	20.0 Hz
27	SWEEP Control	"OFF" position
28	SWEEP Vernier Control	Fully cw, detent (in "CAL" position)
29	AC/OFF/DC Switch	"DC" position
30	EXT V/DIV Vernier Control	Fully cw, detent (in "CAL" position)
31	EXT V/DIV Control	".01 V/DIV" position
35	INTENSITY Control	Fully ccw
36	HORIZONTAL Control	Midrange position
37	FOCUS Control	Midrange position
38	VERT Control	Midrange position
39	ANALY DISPR Control	Fully ccw, detent
47	DEV/PWR Control	"20 kHz" position

Other FM/AM-1000S features related to sweep generator/tracking oscilloscope operation, but not requiring an initial setting:

1 DEVIATION/WATTS Meter
26 SCOPE IN Connector
32 FREQUENCY MHz Thumbwheels

The FM/AM-1000S is now ready for sweep generator/tracking oscilloscope operation.

4-7-3

TEST PROCEDURE: ***USING THE FM/AM-1000S AS A SWEEP GENERATOR AND TRACKING OSCILLOSCOPE***

TEST OBJECTIVE: To display typical frequency response curve of a circuit under test on FM/AM-1000S oscilloscope.

SPECIAL ACCESSORY EQUIPMENT REQ'D:

For Circuits Using Detector:

1 Positive or negative detector (Hewlett Packard 8471A or similar)

1 Coax cable with BNC male connector on both ends

2 Oscilloscope probes (1:1). If CUT has terminating connectors, use 50Ω coax cables with appropriate connectors.

1 BNC female to female adaptor

2 DC blocking capacitors (required only if DC components are present)

For Circuits Using Detector Probe (High Impedance Circuits):

1 Oscilloscope probe (1:1). If CUT has terminating connectors, use 50Ω coax cable with appropriate connectors.

1 Detector probe

1 DC blocking capacitor (required only if DC components are present)

TEST SET-UP DIAGRAM: For Circuits Using Detector:

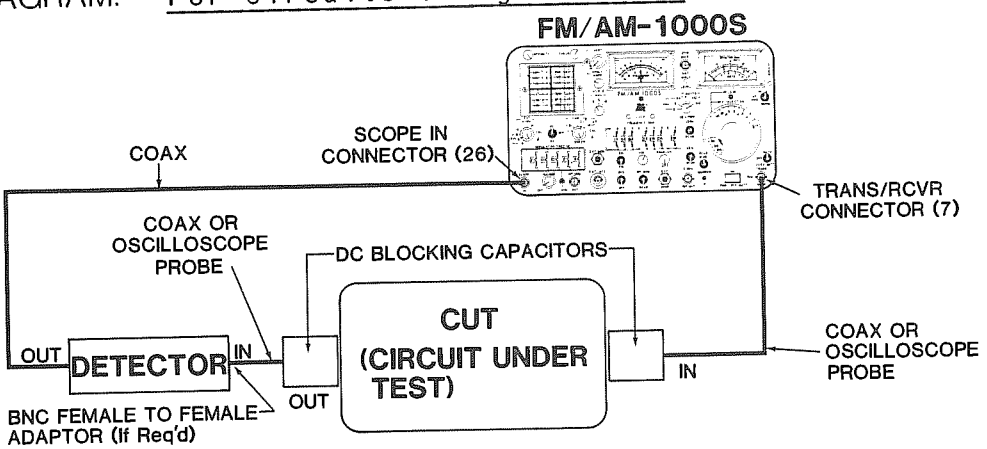

FIGURE 4-31 TEST SET-UP DIAGRAM FOR SWEEP GENERATOR/TRACKING OSCILLOSCOPE OPERATION (USING DETECTOR)

TEST SET-UP
DIAGRAM: (cont'd)

For Circuits Using Detector Probe (High Impedance Circuits):

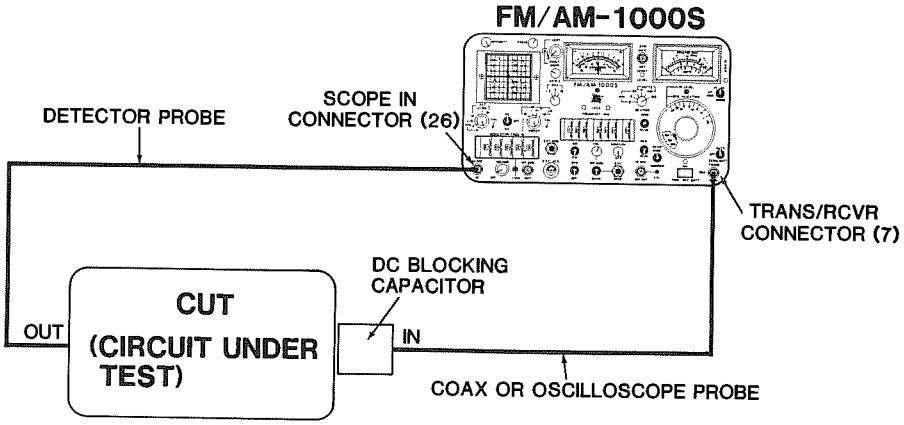

FIGURE 4-32 TEST SET-UP DIAGRAM FOR SWEEP GENERATOR/TRACKING OSCILLOSCOPE OPERATION (USING DETECTOR PROBE)

STEP	PROCEDURE
1.	Set FM/AM-1000S controls for sweep generator/tracking oscilloscope operation as shown in Figure 4-30, page 4-79.
2.	Connect FM/AM-1000S to circuit under test (CUT) and required test accessories as shown in appropriate test set-up diagram above.
3.	Apply power to CUT (if applicable).
4.	Apply power to FM/AM-1000S.
5.	Adjust INTENSITY Control (35) and FOCUS Control (37) for a sharp visible dot on CRT.

STEP PROCEDURE

6. Adjust VERT Control (38) and HORIZ Control (36) to position dot three graticule divisions above or below major horizontal axis, along major vertical axis.

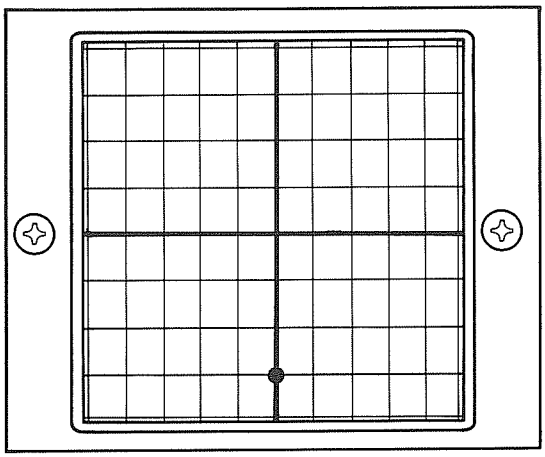

USING POSITIVE DETECTOR

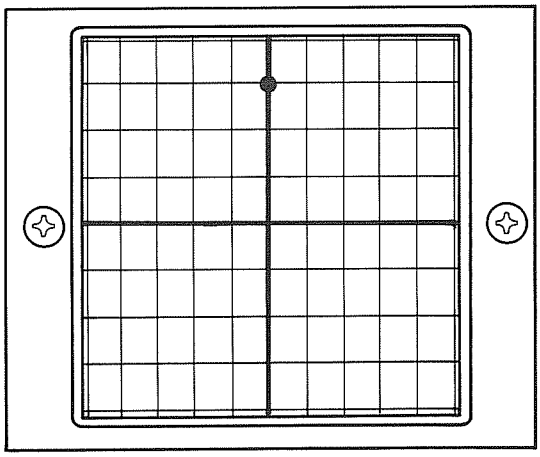

USING NEGATIVE DETECTOR

FIGURE 4-33 DOT POSITIONED 3 GRATICULE DIVISIONS ABOVE OR BELOW MAJOR HORIZONTAL AXIS, ON MAJOR VERTICAL AXIS

7. Rotate INT MOD Control (23) cw until deviation reading on DEVIATION/WATTS Meter (1) is 20 kHz. Dot on CRT will now become a horizontal trace.

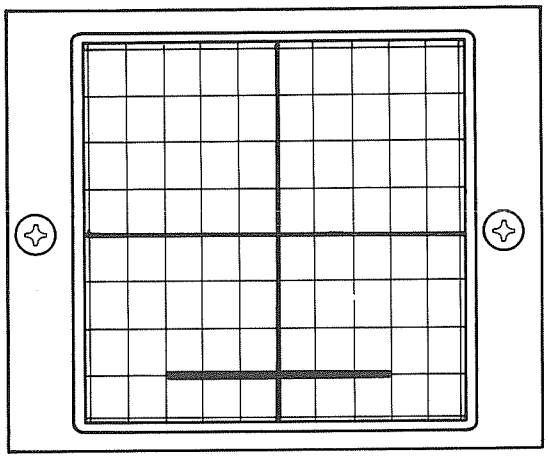

USING POSITIVE DETECTOR

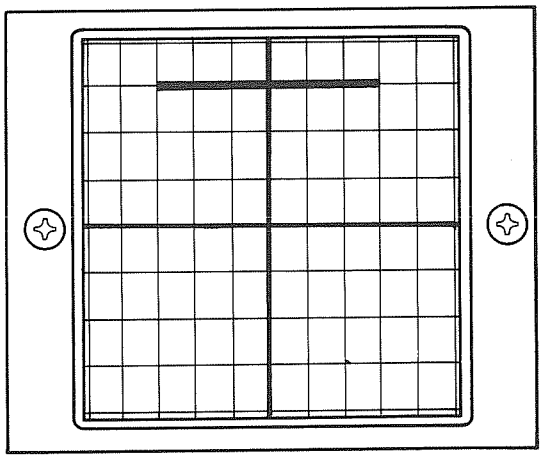

USING NEGATIVE DETECTOR

FIGURE 4-34 HORIZONTAL TRACE POSITIONED 3 GRATICULE DIVISIONS ABOVE OR BELOW MAJOR HORIZONTAL AXIS, CENTERED OVER MAJOR VERTICAL AXIS.

8. If trace exhibits any vertical components (i.e. noise), rotate EXT V/DIV Control (31) to ".1 volts/div" position to eliminate those components.

9. Set FREQUENCY MHz Thumbwheels (32) to center of frequency to be swept.

STEP	PROCEDURE
10.	Rotate RF LEVEL/BFO INJECTION Dial (5) cw until peak of displayed waveform rests on major horizontal axis.

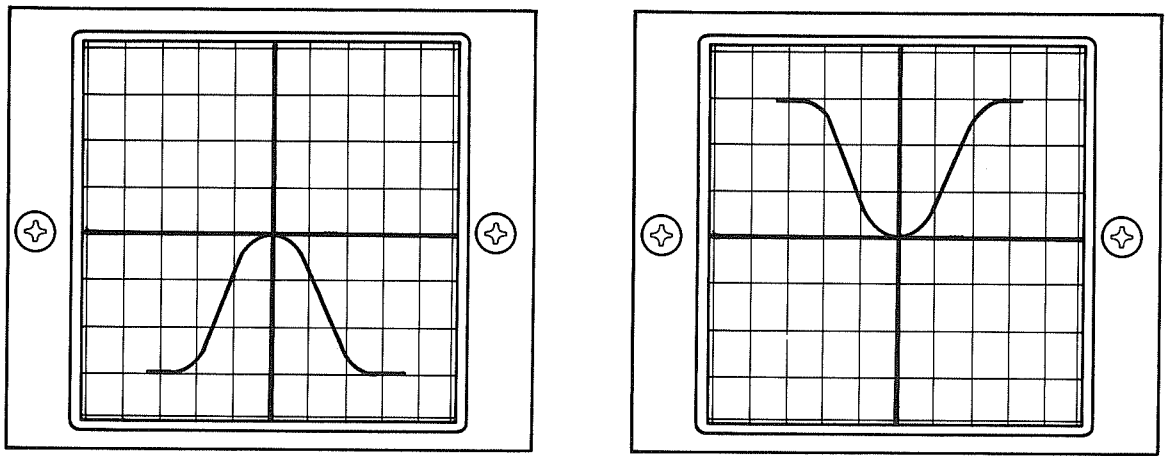

USING POSITIVE DETECTOR USING NEGATIVE DETECTOR

FIGURE 4-35 PEAK OF DISPLAYED WAVEFORM RESTING ON MAJOR HORIZONTAL AXIS

11. Rotate RF LEVEL/BFO INJECTION Dial (5) cw to add 3 dB to signal strength. Oscilloscope is now displaying frequency response curve of CUT. The major horizontal axis on CRT now represents -3 dB point (or half power point) of CUT.

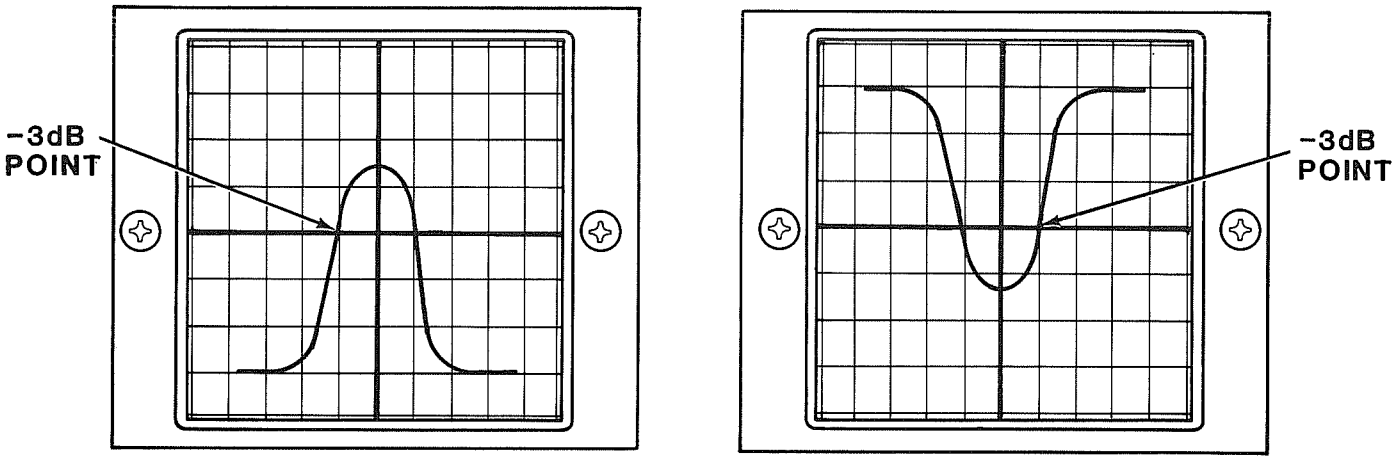

USING POSITIVE DETECTOR USING NEGATIVE DETECTOR

FIGURE 4-36 FREQUENCY RESPONCE OF CURVE OF CUT

STEP	PROCEDURE
11. (cont'd)	

NOTE

- If the 3 dB point above major horizontal axis (below axis when using negative detector) cannot be achieved because of significant attenuation, repeat Step 10 until peak of displayed waveform is aligned with any other horizontal graticule marking above or below major horizontal axis. After repeating Step 11, selected horizontal marking will represent the -3 dB point (or half power point) of frequency response curve.

4-7-5

TEST PROCEDURE: ***MEASURING BANDPASS AND CENTER FREQUENCY OF A BANDPASS CIRCUIT***

TEST OBJECTIVE: N/A

SPECIAL ACCESSORY EQUIPMENT REQ'D: N/A

TEST SET-UP DIAGRAM: N/A

STEP	PROCEDURE
1.	Perform procedure 4-7-3, titled "USING THE FM/AM-1000S AS A SWEEP GENERATOR AND TRACKING OSCILLOSCOPE", on page 4-81.
2.	Increment or decrement FREQUENCY MHz Thumbwheels (32) to center peak of bandpass response curve over major vertical axis.

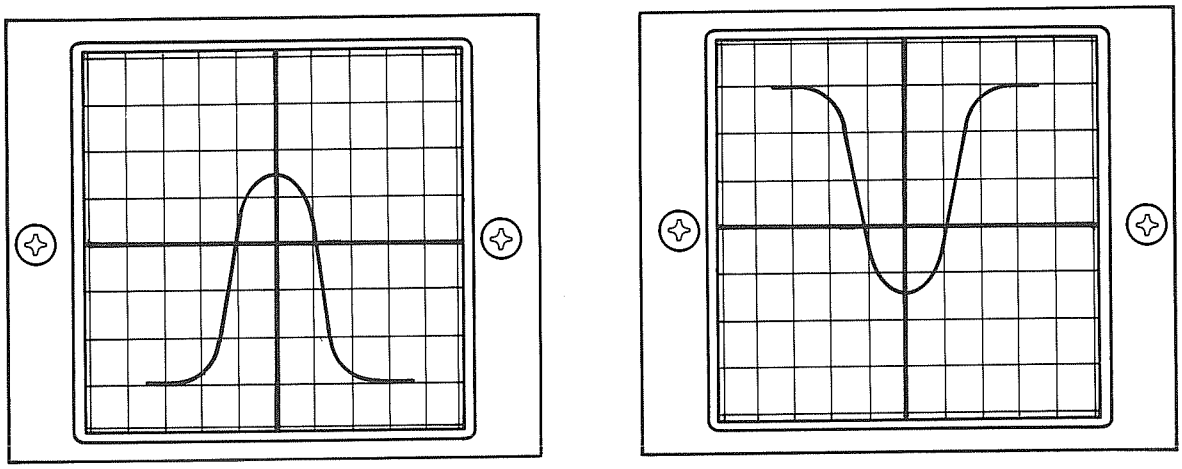

USING POSITIVE DETECTOR USING NEGATIVE DETECTOR

FIGURE 4-37 BANDPASS RESPONSE CURVE CENTERED OVER MAJOR VERTICAL AXIS

3. Rotate INT MOD Control (23) ccw until one leg of frequency response curve rests on major horizontal axis.

NOTE

- Bandpass response curve may not be totally symmetrical after completing this step (i.e. one leg of curve may be longer than the other).

STEP PROCEDURE

3. (cont'd)

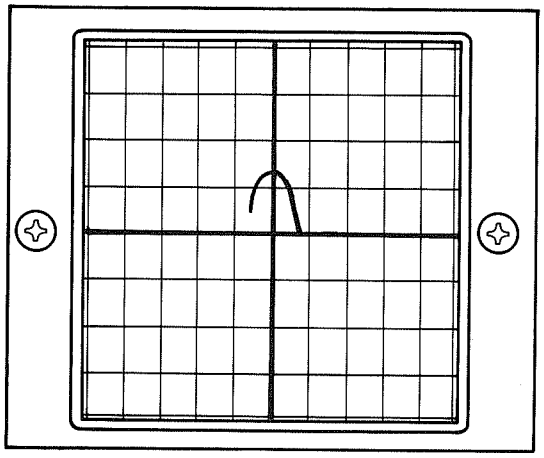

USING POSITIVE DETECTOR

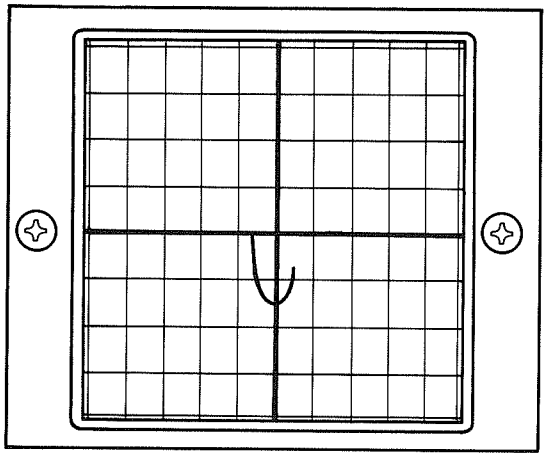

USING NEGATIVE DECTECTOR

FIGURE 4-38 BANDPASS RESPONSE CURVE WITH ONE LEG RESTING ON MAJOR HORIZONTAL AXIS

4. Increment or decrement FREQUENCY MHz Thumbwheels (32) until bandpass response curve becomes symmetrical (both legs of curve of equal length).

NOTE

- Legs of frequency response curve may not rest on major horizontal axis after completion of this step.

Present setting of FREQUENCY MHz Thumbwheels (32) represent center frequency of CUT. Record setting.

STEP	PROCEDURE
5.	Rotate INT MOD Control (23) cw until legs of bandpass response curve again rest on major horizontal axis. The intersection of response curve with major horizontal axis represents -3 dB point (or half power point) of the response curve.

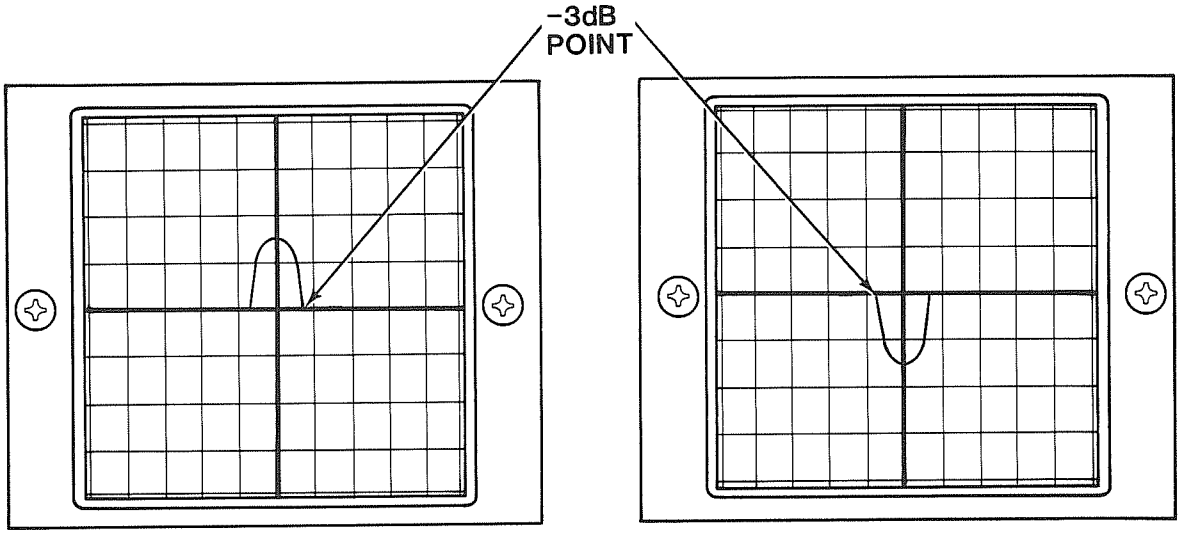

USING POSITIVE DETECTOR

USING NEGATIVE DETECTOR

FIGURE 4-39 BANDPASS RESPONSE CURVE WITH LEGS RESTING ON MAJOR HORIZONTAL AXIS

6. To determine bandpass of CUT, observe reading of DEVIATION/ WATTS Meter (1):

   a. If reading on uppermost scale of meter is less than 6 kHz, rotate DEV/PWR Control (47) to "6 kHz" position and proceed to Step 6b. If reading is above 6 kHz, proceed directly to Step 6c.

   b. If reading on middle scale of meter is less than 2 kHz, rotate DEV/PWR Control (47) to "2 kHz" position and proceed to Step 6c. If reading is above 2 kHz, proceed directly to Step 6c.

   c. Record reading of meter; multiply result by 2 to obtain bandpass of CUT in kHz.

4-7-5

TEST PROCEDURE: ***MEASURING BANDREJECT AND CENTER FREQUENCY OF KNOTCH CIRCUITS***

TEST OBJECTIVE: N/A

SPECIAL ACCESSORY EQUIPMENT REQ'D: N/A

TEST SET-UP DIAGRAM: N/A

STEP	PROCEDURE
1.	Perform procedure 4-7-3, titled "USING THE FM/AM-1000S AS A SWEEP GENERATOR AND TRACKING OSCILLOSCOPE", on page 4-81.
2.	Increment or decrement FREQUENCY MHz Thumbwheels (32) to center peak of bandreject response curve along major vertical axis.

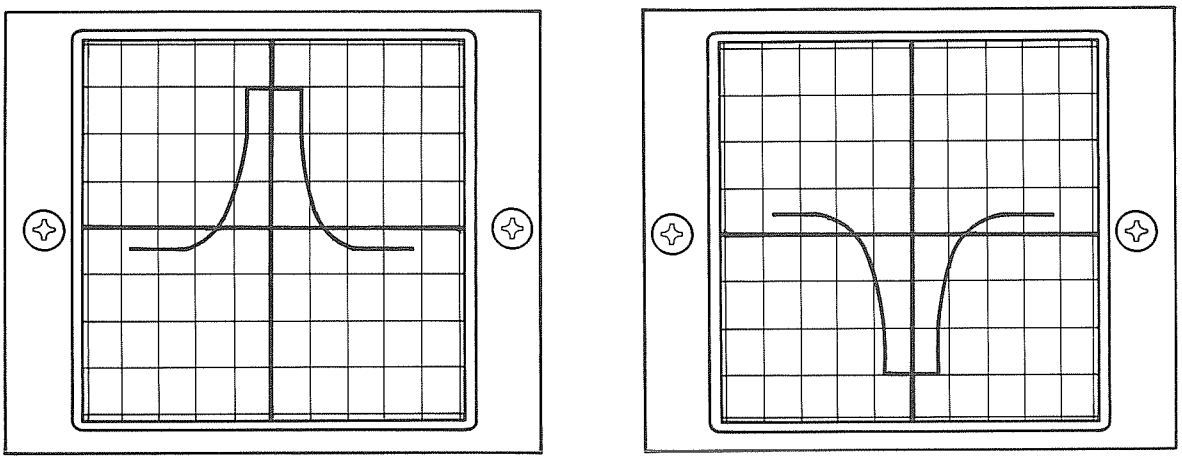

USING NEGATIVE DETECTOR **USING POSITIVE DETECTOR**

FIGURE 4-40 BANDREJECT RESPONSE CURVE CENTERED OVER MAJOR VERTICAL AXIS

3. Rotate INT MOD Control (23) ccw until one leg of frequency response curve rests on major horizontal axis.

NOTE

- Bandreject response curve may not be totally symmetrical after completing this step (i.e. one leg of curve may be longer than the other).

STEP PROCEDURE

3. (cont'd)

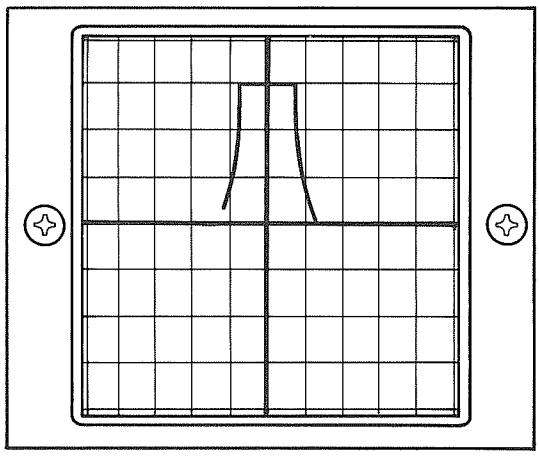

USING NEGATIVE DETECTOR

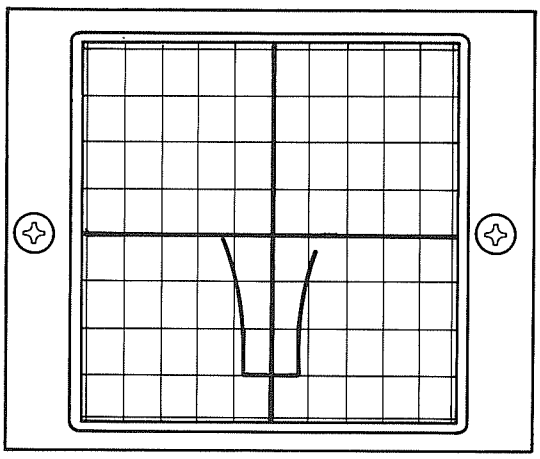

USING POSITIVE DETECTOR

FIGURE 4-41 BANDREJECT RESPONSE CURVE WITH ONE LEG RESTING ON MAJOR HORIZONTAL AXIS

4. Increment or decrement FREQUENCY MHz Thumbwheels (32) until bandreject response curve becomes symmetrical (both legs of curve of equal length).

NOTE

- Legs of frequency response curve may not rest on major horizontal axis after completion of this step.

Present setting of FREQUENCY MHz Thumbwheels (32) represents center frequency of CUT. Record setting.

5. Rotate INT MOD Control (23) cw until legs of bandreject response curve again rest on major horizontal axis. The intersection of the response curve with major horizontal axis represents -3 dB point (or half power point) of the response curve.

STEP PROCEDURE

5. (cont'd)

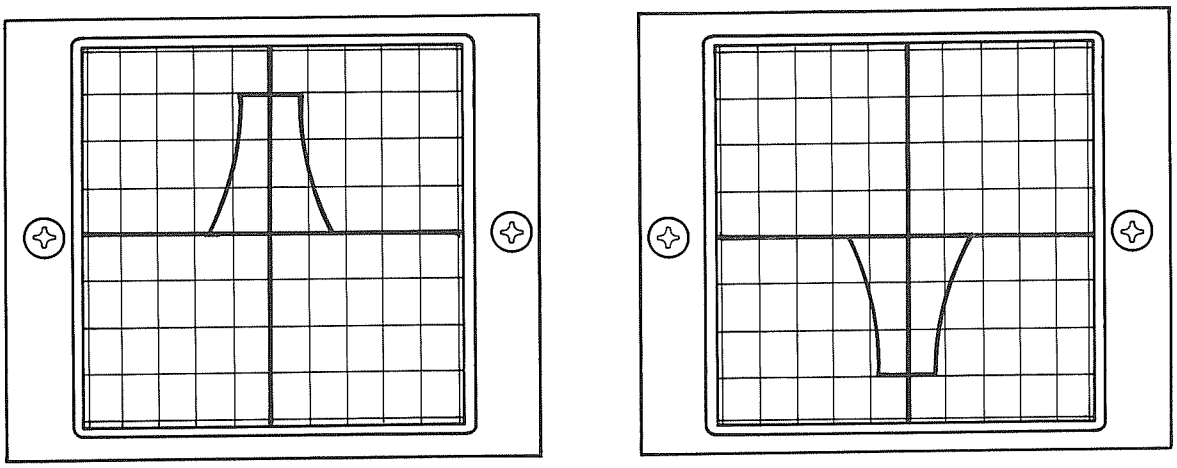

FIGURE 4-42 BANDREJECT RESPONSE CURVE WITH LEGS RESTING ON MAJOR HORIZONTAL AXIS

6. To determine bandreject of CUT, observe reading of DEVIATION/ WATTS Meter (1):

   a. If reading on uppermost scale of meter is less than 6 kHz, rotate DEV/PWR Control (47) to "6 kHz" position and proceed to Step 6b. If reading is above 6 kHz, proceed directly to Step 6c.

   b. If reading on middle scale is less than 2 kHz, rotate DEV/PWR Control (47) to "2 kHz" position and proceed to Step 6c. If reading is above 2 kHz, proceed directly to Step 6c.

   c. Record reading of meter; multiply result by 2 to obtain bandreject of CUT in kHz.

4-7-6

TEST PROCEDURE: ***MEASURING CUT-OFF FREQUENCY OF LOWPASS CIRCUITS***

TEST OBJECTIVE: N/A

SPECIAL ACCESSORY EQUIPMENT REQ'D: For Circuits Using Detector:

1 Positive or negative detector (Hewlett Packard 8471A or similar)

1 Coax cable with BNC male connector on both ends

2 Oscilloscope probes (1:1). If CUT has terminating connectors, use 50Ω coax cables with appropriate connectors.

1 BNC female to female adaptor

2 DC blocking capacitors (required only if DC components are present)

For Circuits Using Detector Probe (High Impedance Circuits):

1 Oscilloscope probe (1:1). If CUT has terminating connectors, use 50Ω coax cable with appropriate connectors

1 Detector probe

1 DC blocking capacitor (required only if DC components are present)

TEST SET-UP DIAGRAM: For Circuits Using Detector:

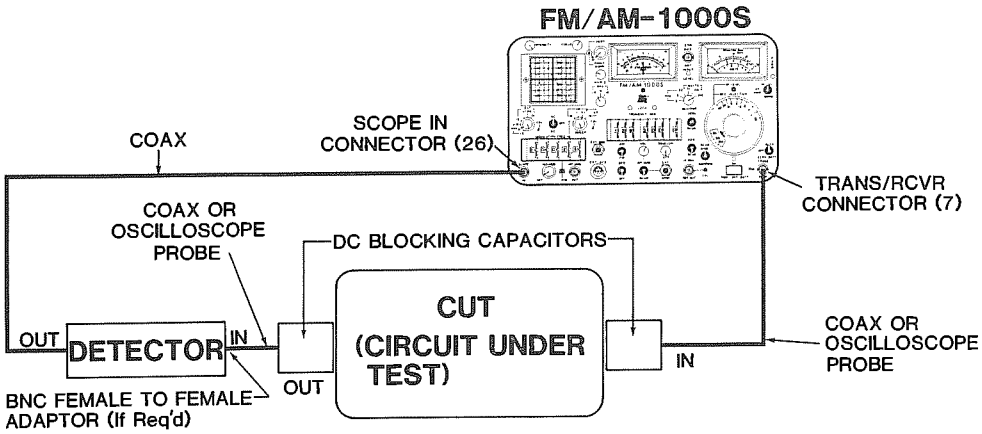

FIGURE 4-43 TEST SET-UP DIAGRAM FOR MEASURING CUT-OFF FREQUENCY OF LOWPASS CIRCUITS (USING DETECTOR)

TEST SET-UP
DIAGRAM: For Circuits Using Detector Probes (High Impedance Circuits):

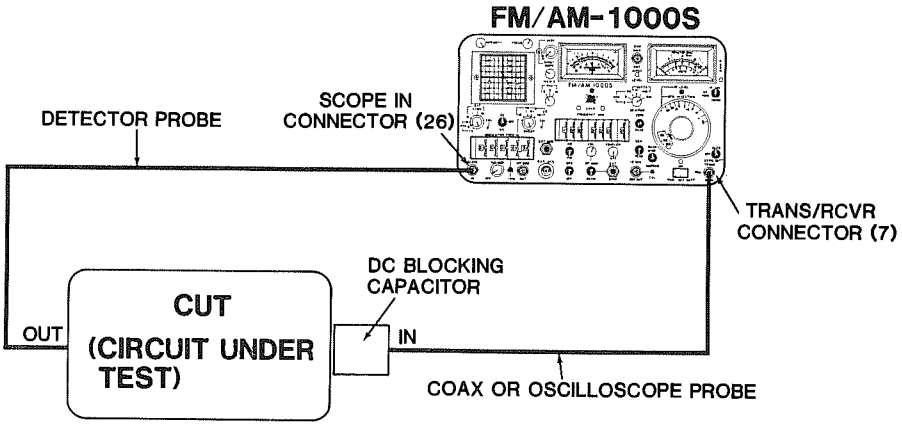

FIGURE 4-44 TEST SET-UP DIAGRAM FOR MEASURING CUT-OFF FREQUENCY OF LOWPASS CIRCUITS (USING DETECTOR PROBE)

STEP	PROCEDURE
1.	Set FM/AM-1000S controls for sweep generator/tracking oscilloscope operation as shown in Figure 4-30, page 4-79.
2.	Connect FM/AM-1000S to circuit under test (CUT) and required test accessories as shown in appropriate test set-up diagram above.
3.	Apply power to CUT (if applicable).
4.	Apply power to FM/AM-1000S.
5.	Adjust INTENSITY Control (35) and FOCUS Control (37) for a sharp visible dot on CRT.
6.	Adjust VERT Control (38) and HORIZ Control (36) to position dot three graticule divisions above or below major horizontal axis, along major vertical axis.

STEP PROCEDURE

6. (cont'd)

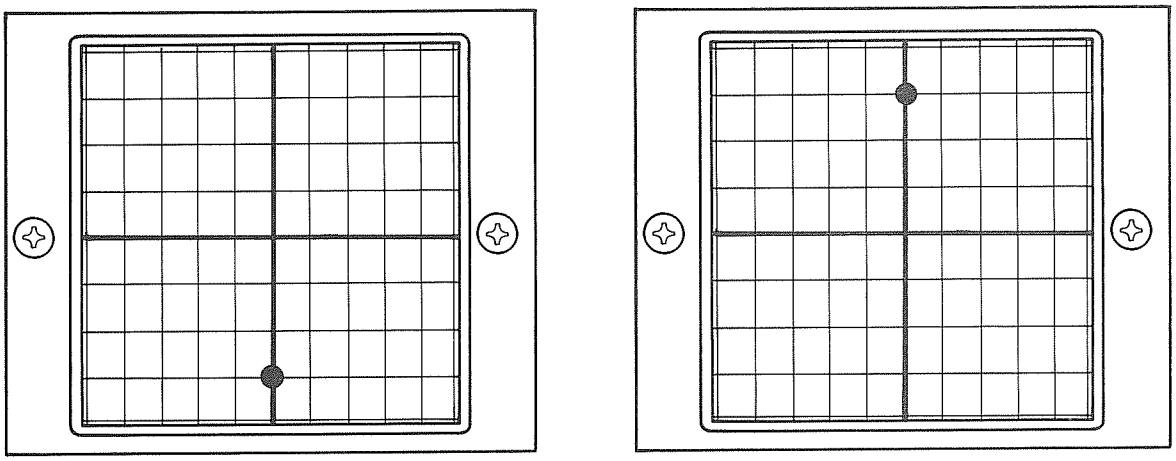

USING POSITIVE DETECTOR USING NEGATIVE DETECTOR

FIGURE 4-45 DOT POSITIONED 3 GRATICULE DIVISIONS ABOVE OR BELOW MAJOR HORIZONTAL AXIS , CENTERED OVER MAJOR VERTICAL AXIS

7. Rotate INT MOD Control (23) cw until deviation reading on DEVIATION/WATTS Meter (1) is 5 kHz. Dot on CRT will now become a horizontal trace.

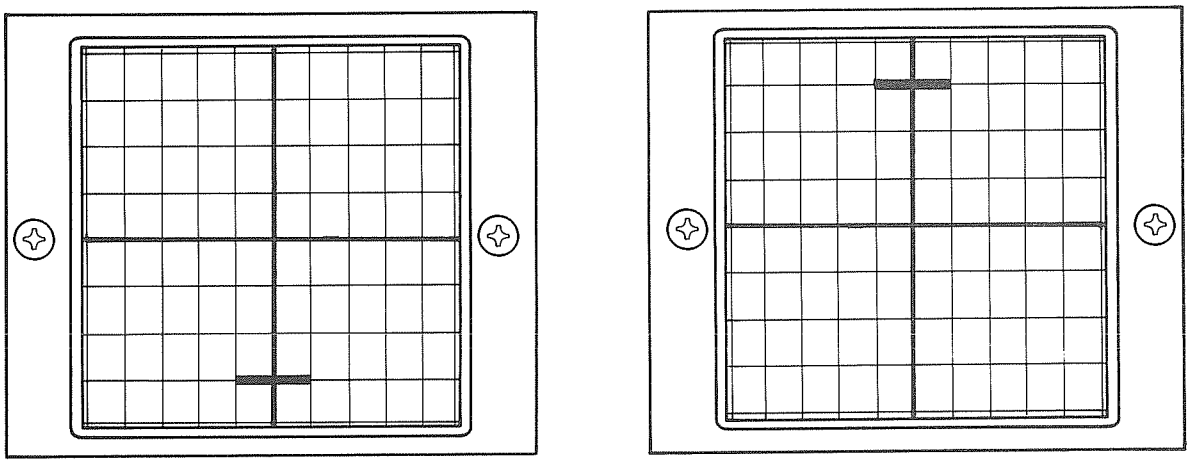

USING NEGATIVE DETECTOR USING POSITIVE DETECTOR

FIGURE 4-46 HORIZONTAL TRACE POSITIONED 3 GRATICULE DIVISIONS ABOVE OR BELOW MAJOR HORIZONTAL AXIS,CENTERED OVER MAJOR VERTICAL AXIS

8. If trace exhibits any vertical components (e.g. noise), rotate EXT V/DIV Control (31) ccw to ".1 volts/div" position to eliminate those components.

STEP	PROCEDURE
9.	Set FREQUENCY MHz Thumbwheels (32) to a frequency substantially lower than cut-off frequency of CUT.
10.	Rotate RF LEVEL/BFO INJECTION Dial (5) cw until scope trace becomes aligned with horizontal axis.

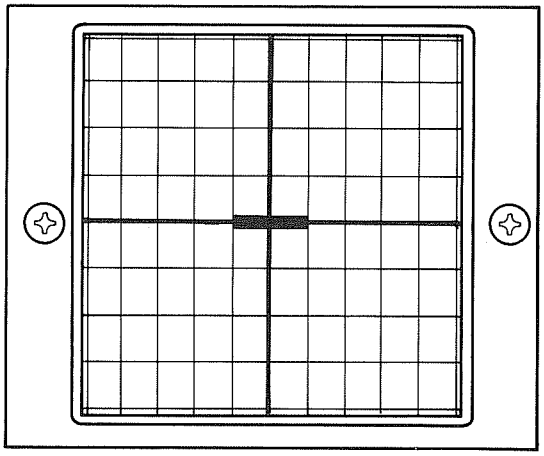

FIGURE 4-47 HORIZONTAL TRACE ALIGNED WITH MAJOR HORIZONTAL AXIS (USING POSITIVE & NEGATIVE DETECTOR)

11. Rotate RF LEVEL/BFO INJECTION Dial (5) cw to add 3 dB to signal strength. The major horizonal axis now represents -3 dB point (or half power point) of CUT.

NOTE

- If the 3 dB point above major horizontal axis (below axis when using negative detector) cannot be achieved because of significant attenuation, repeat Step 10 until horizontal trace is aligned with any other horizontal graticule marking above or below major horizontal axis. After repeating Step 11, selected horizontal marking will represent the -3 dB point (or half power point) of frequency response curve.

STEP PROCEDURE

11. (cont'd)

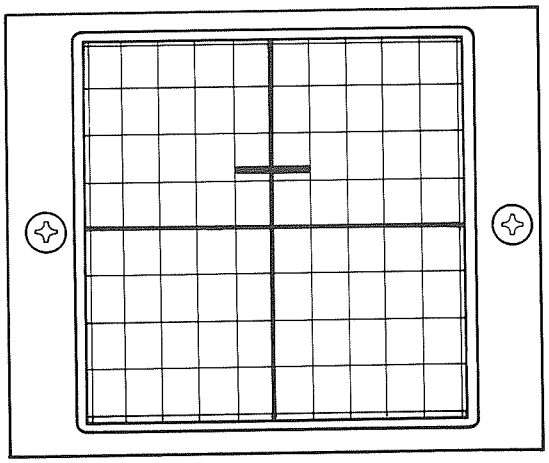

USING POSITIVE DETECTOR

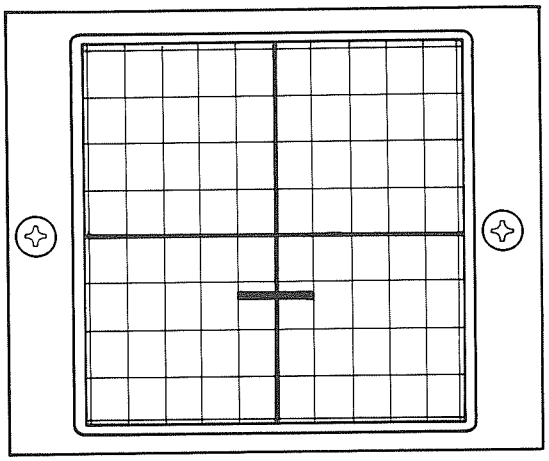

USING NEGATIVE DETECTOR

FIGURE 4-48 POSITION OF HORIZONTAL TRACE AFTER ADDING 3dB TO SIGNAL STRENGTH

12. Set FREQUENCY MHz Thumbwheels (32) to approximate cut-off frequency of CUT.

13. Rotate FREQUENCY MHz Thumbwheels (32) as indicated below to position frequency response curve at point where major vertical and horizontal axes intersect:

a. If horizontal trace (or section of frequency response curve) is above a major horizontal axis, increment FREQUENCY MHz Thumbwheels (32).

b. If horizontal trace (or section of frequency response curve) is below major horizontal axis, decrement FREQUENCY MHz Thumbwheels (32).

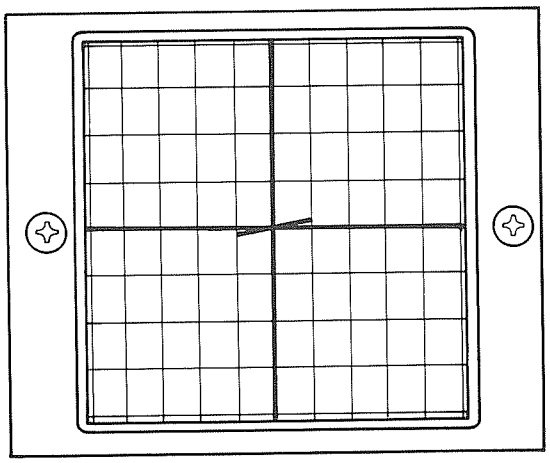

USING POSITIVE DETECTOR

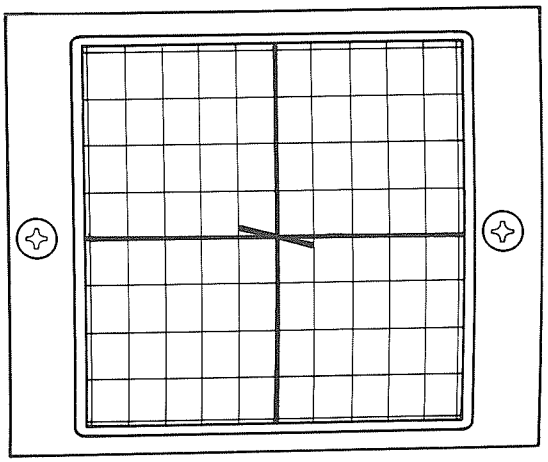

USING NEGATIVE DETECTOR

FIGURE 4-49 HORIZONTAL TRACE (OR SECTION OF FREQUENCY RESPONSE CURVE) POSITIONED AT INTERSECTION OF MAJOR AXIS

STEP	PROCEDURE
14.	Present setting of FREQUENCY MHz Thumbwheels represents cut-off frequency of CUT.

4-7-7

TEST PROCEDURE: ***MEASURING CUT -OFF FREQUENCY OF HIGH PASS CIRCUITS***

TEST OBJECTIVE: N/A

SPECIAL ACCESSORY EQUIPMENT REQ'D: For Circuits Using Detector:

1 Positive or negative detector (Hewlett Packard 8471A or similar)

1 Coax cable with BNC male connector on both ends

2 Oscilloscope probes (1:1). If CUT has terminating connectors, use 50Ω coax cables with appropriate connectors.

1 BNC female to female adaptor

2 DC blocking capacitors (required only if DC components are present)

For Circuits Using Detector Probe (High Impedance Circuits):

1 Oscilloscope probe (1:1). If CUT has terminating connectors, use 50Ω coax cable with appropriate connectors

1 Detector probe

1 DC blocking capacitor (required only if DC components are present)

TEST SET-UP DIAGRAM: For Circuits Using Detector:

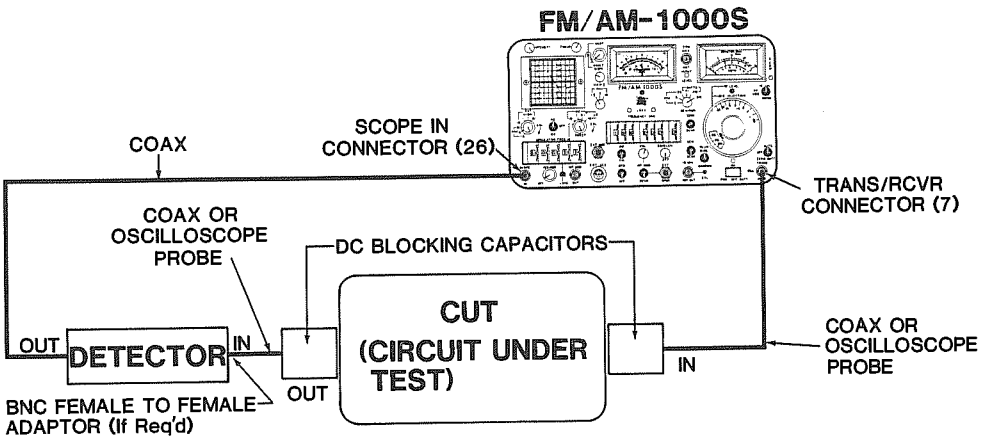

FIGURE 4-50 TEST SET-UP DIAGRAM FOR MEASURING CT CUT-OFF FREQUENCY OF HIGHPASS CIRCUITS (USING DETECTOR)

TEST SET-UP
DIAGRAM: For Circuits Using Detector Probe (High Impedance Circuits):

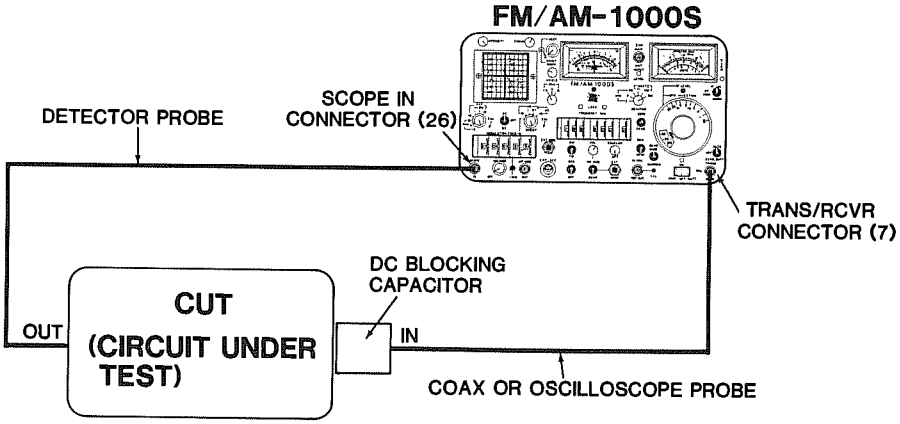

FIGURE 4-51 TEST SET-UP DIAGRAM FOR MEASURING CUT-OFF FREQUENCY OF HIGHPASS CIRCUITS (USING DETECTOR PROBE)

STEP	PROCEDURE
1.	Set FM/AM-1000S controls for sweep generator/tracking oscilloscope operation as shown in Figure 4-30, page 4-79.
2.	Connect FM/AM-1000S to circuit under test (CUT) and required test accessories as shown in appropriate test set-up diagram above.
3.	Apply power to CUT (if applicable).
4.	Apply power to FM/AM-1000S.
5.	Adjust INTENSITY Control (35) and FOCUS Control (37) for a sharp visible dot on CRT.
6.	Adjust VERT Control (38) and HORIZ Control (36) to position dot three graticule divisions above or below major horizontal axis, along major vertical axis.

STEP PROCEDURE

6. (cont'd)

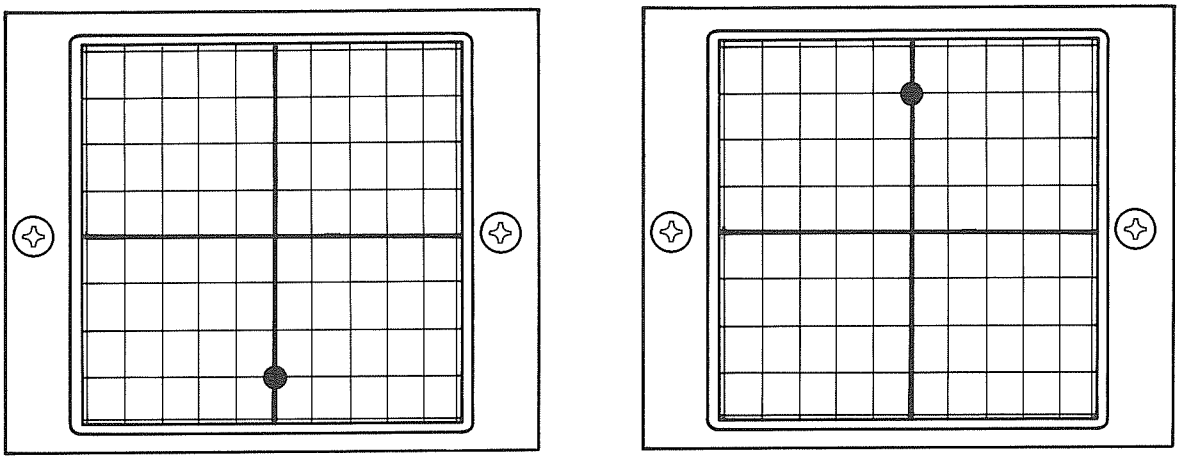

USING POSITIVE DETECTOR USING NEGITIVE DETECTOR

FIGURE 4-52 DOT POSITIONED 3 GRAD GRATICULE DIVISIONS ABOVE OR BELOW MAJOR HORIZONTAL AXIS, ON MAJOR VERTICAL AXIS

7. Rotate INT MOD Control (23) cw until deviation reading on DEVIATION/WATTS Meter (1) is 5 kHz. Dot on CRT will now become a horizontal trace.

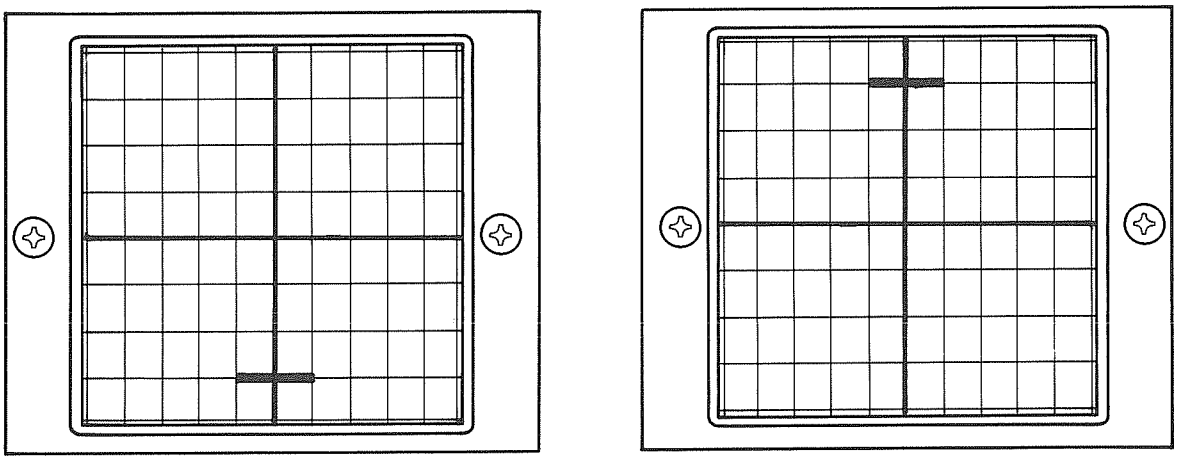

USING POSITIVE DETECTOR USING NEGATIVE DETECTOR

FIGURE 4-53 HORIZONTAL TRACE POSITIONED 3 GRATICULE DIVISIONS ABOVE OR BELOW MAJOR HORIZONTAL AXIS , CENTERED OVER MAJOR VERTICAL AXIS

8. If trace exhibits any vertical components (e.g. noise), rotate EXT V/DIV Control (31) ccw to ".1 volts/div" position to eliminate those components.

STEP	PROCEDURE
9.	Set FREQUENCY MHz Thumbwheels (32) to a frequency substantially higher than cut-off frequency of CUT.
10.	Rotate RF LEVEL/BFO INJECTION Dial (5) cw until scope trace becomes aligned with major horizontal axis.

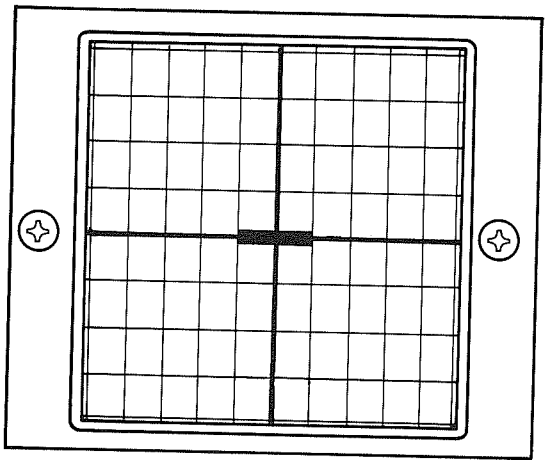

FIGURE 4-54 HORIZONTAL TRACE ALIGNED WITH MAJOR HORIZONTAL AXIS (USING POSITIVE AND NEGATIVE DETECTOR)

11. Rotate RF LEVEL/BFO INJECTION Dial (5) cw to add 3 dBm to signal strength. The major horizontal axis on CRT now represents -3 dB point (or half power point) of CUT.

NOTE

- If the 3 dB point above major horizontal axis (below axis when using negative detector) cannot be achieved because of significant attenuation, repeat Step 10 until horizontal trace is aligned with any other horizontal graticule marking above or below major horizontal axis. After repeating Step 11, selected horizontal marking will represent the -3 dB point (or half power point) of frequency response curve.

STEP PROCEDURE

11. (cont')

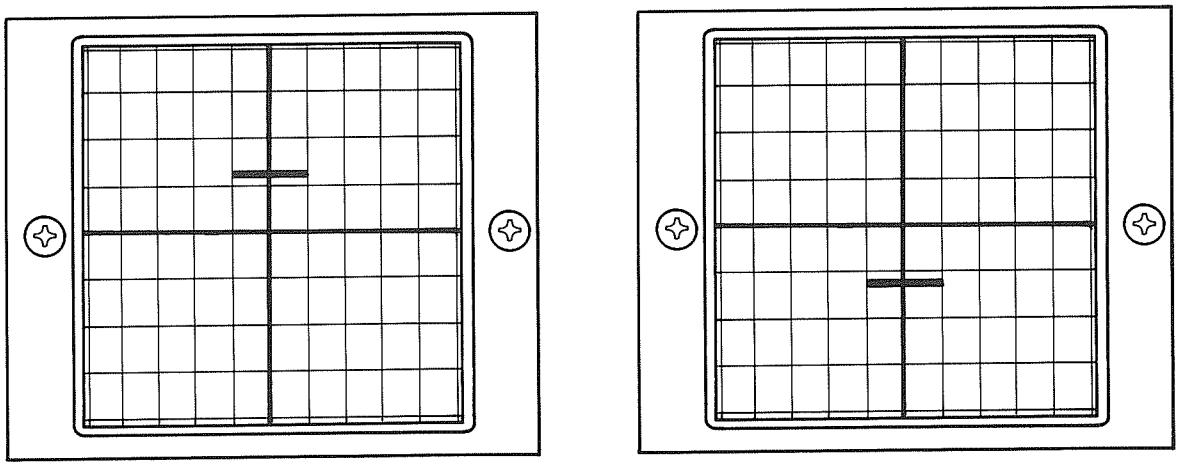

USING POSITIVE DETECTOR USING NEGATIVE DETECTOR

FIGURE 4-55 POSITION OF HORIZONTAL TRACE AFTER ADDING 3dB

12. Set FREQUENCY MHz Thumbwheels (32) to approximate cut-off frequency of CUT.

13. Rotate FREQUENCY MHz Thumbwheels (32) as indicated below to position frequency response curve at point where major vertical and horizontal axes intersect:

    a. If horizontal trace (or section of frequency response curve) is above major horizontal axis, decrement FREQUENCY MHz Thumbwheels (32).

    b. If horizontal trace (or section of frequency response curve) is below major horizontal axis, increment FREQUENCY MHz Thumbwheels (32).

STEP PROCEDURE

13. (cont'd)

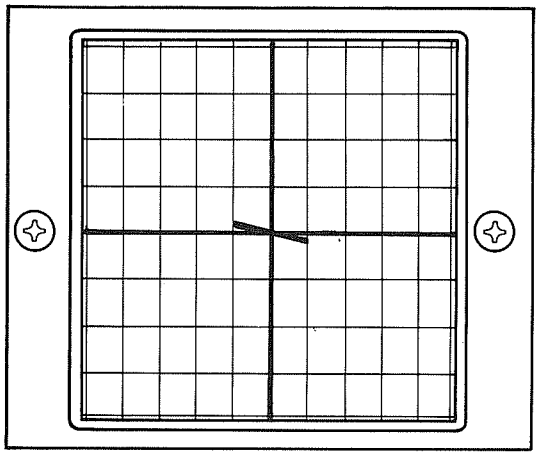

USING POSITIVE DETECTOR

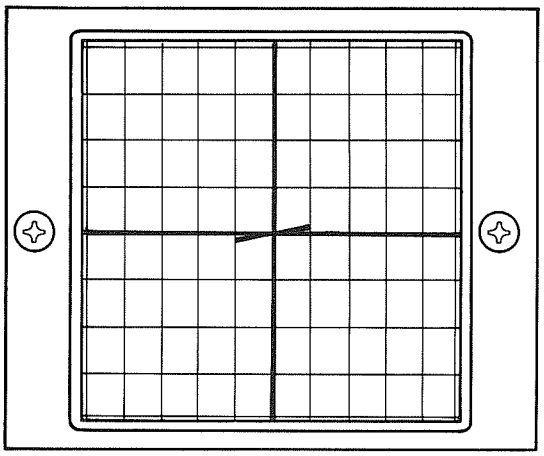

USING NEGATIVE DETECTOR

FIGURE 4-56 HORIZONTAL TRACE (OR SECTION OF FREQUENCY RESPONSE CURVE) POSITIONED AT INTERSECTION OF MAJOR AXIS.

14. Present setting of FREQUENCY MHz Thumbwheels represents cut-off frequency of CUT.

4-8 GENERAL RECEIVER TESTS

4-8-1 GENERAL

This section contains an assortment of the more common tests to be used in evaluating AM/FM receiver performance using the FM/AM-1000S. The tests included were selected on the basis of appropriateness, wide ranging applicability and minimal support equipment required to complete the tests. Reference the "RECEIVER ALIGNMENT FLOWCHART" contained in Section 5 of this manual for the recommended sequence in which these tests should be performed.

The test procedures contained in this section are:

Applicable to AM or FM receivers:

4-8-2 OSCILLATOR FREQUENCY MEASUREMENT
4-8-3 MEASURING RF SECTION BANDPASS AND CENTER FREQUENCY
4-8-4 MEASURING BANDPASS AND CENTER FREQUENCY OF AN IF STRIP
4-8-5 MEASURING RECEIVER BANDPASS AND CENTER FREQUENCY (For bandpasses less than 40 kHz)
4-8-6 MEASURING RECEIVER BANDPASS AND CENTER FREQUENCY (For bandpasses greater than 40 kHz)
4-8-7 MEASURING SQUELCH THRESHOLD AND DIFFERENTIAL (For receivers with fixed squelch control.)
4-8-8 MEASURING SQUELCH THRESHOLD AND DIFFERENTIAL (For receivers with variable squelch control.)
4-8-9 MEASURING AGC ACTION
4-8-10 MEASURING RECEIVER SENSITIVITY

Applicable to FM receivers only:

4-8-11 MEASURING 20 dB QUIETING
4-8-12 MEASURING 12 dB SINAD SENSITIVITY
4-8-13 MEASURING MAXIMUM RECEIVABLE DEVIATION

4-8-2

TEST PROCEDURE: ***OSCILLATOR FREQUENCY MEASUREMENT (AM/FM RCVR)***

TEST OBJECTIVE: N/A

SPECIAL ACCESSORY EQUIPMENT REQ'D: RF Pickup or "Sniffer" Cable (See Appendix G for cable construction procedure.)

TEST SET-UP DIAGRAM:

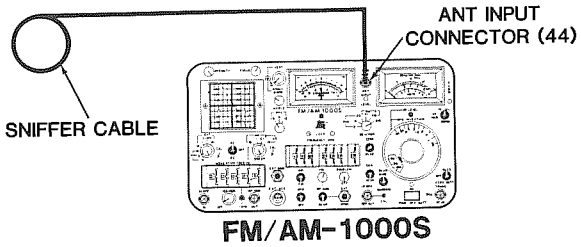

FIGURE 4-57 TEST SET-UP DIAGRAM FOR OSCILLATOR FREQUENCY MEASUREMENT

STEP	PROCEDURE
1.	Set FM/AM-1000S controls for receiver operation as shown in Figure 4-28, page 4-63.
2.	Set FM/AM-1000S controls for spectrum analyzer operation as shown in Figure 4-16, page 4-33.
3.	Apply power to FM/AM-1000S.
4.	Adjust INTENSITY Control (35) cw and FOCUS Control (37) appropriately for a sharp visible trace display.

NOTE

- Warm-up time of CRT is approximately 30 seconds from a "cold" start-up; trace display will not become visible until CRT achieves warm-up.

5.	Set FREQUENCY MHz Thumbwheels (32) within ±5 MHz of approximate frequency of local oscillator under test.

STEP PROCEDURE

6. Connect RF pickup or "sniffer" cable to ANT INPUT Connector (44).

CAUTION

- MAXIMUM CONTINUOUS INPUT TO THIS CONNECTOR MUST NOT EXCEED .25 W.
- MAXIMUM INPUT IS -30 dBm FOR PROPER SPECTRUM ANALYZER OPERATION (SIGNALS ABOVE -30 dBm MAY CAUSE SPURIOUS SIGNALS TO BE GENERATED AND DISPLAYED BY FM/AM-1000S.)

7. Place loop of sniffer cable in antenna in close proximity to oscillator being tested in UUT.

8. Rotate ANALY DISPR Control (39) fully ccw and locate oscillator spectrum on spectrum analyzer display.

9. Increment or decrement FREQUENCY MHz Thumbwheels (32) to align oscillator spectrum with major vertical axis.

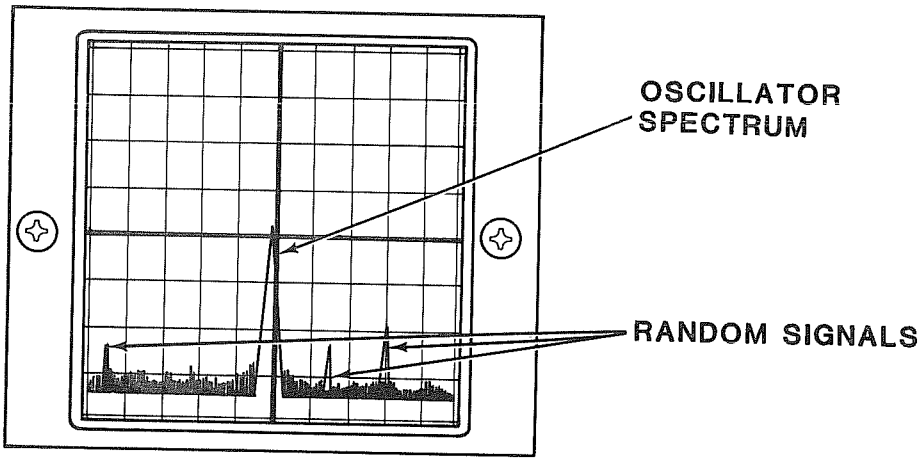

FIGURE 4-58 OSCILLATOR SPECTRUM ALIGNED WITH MAJOR VERTICAL AXIS

10. Shut off power to UUT and observe spectrum analyzer to confirm that the spectrum previously aligned with major vertical axis disappears.

    a. If spectrum disappears when power to UUT is shut off, spectrum is confirmed to be a product of UUT; proceed to Step 13.

    b. If spectrum does not disappear, its origin is confirmed to be from a source other than UUT; proceed to Step 12.

STEP	PROCEDURE
11.	Reapply power to UUT and observe spectrums which reappear on spectrum analyzer. Those spectrums which reappear are produced by UUT. Repeat Step 9 to locate and align spectrum of oscillator under test with major vertical axis.
12.	Rotate ANALY DISPR Control (39) fully ccw, short of detent position.
13.	Realign local oscillator spectrum with major vertical axis by incrementing or decrementing FREQUENCY MHz Thumbwheels (32).
14.	While carefully observing FREQ ERROR Meter (41), increment or decrement FREQUENCY MHz Thumbwheels (32) to center FREQ ERROR Meter (41) at zero.
15.	Rotate 1.5/5/15 kHz Control (33) to "5 kHz" position and increment or decrement FREQUENCY MHz Thumbwheels (32) to center FREQ ERROR Meter (41) at zero.
16.	Rotate 1.5/5/15 kHz Control (33) to "1.5 kHz" position and increment or decrement FREQUENCY MHz Thumbwheels (32) to center FREQ ERROR Meter (41) at zero. a. Present setting of FREQUENCY MHz Thumbwheels (32) represents frequency of oscillator under test.

4-8-3

TEST PROCEDURE: ***MEASURING RF SECTION BANDPASS AND CENTER FREQUENCY (AM/FM RCVR)***

TEST OBJECTIVE: N/A

SPECIAL ACCESSORY EQUIPMENT REQ'D:

For Circuits Using Detector:

1 Positive or negative detector (Hewlett Packard 8471A or similar)

1 Coax cable with BNC male connector on both ends

2 Oscilloscope probes (1:1). If CUT has terminating connectors, use 50Ω coax cables with appropriate connectors.

1 BNC female to female adaptor

2 DC blocking capacitors (required only if DC components are present)

For Circuits Using Detector Probe (High Impedance Circuits):

1 Oscilloscope probe (1:1). If CUT has terminating connectors, use 50Ω coax cable with appropriate connectors

1 Detector probe

1 DC blocking capacitor (required only if DC components are present)

TEST SET-UP DIAGRAM: For Circuits Using Detector:

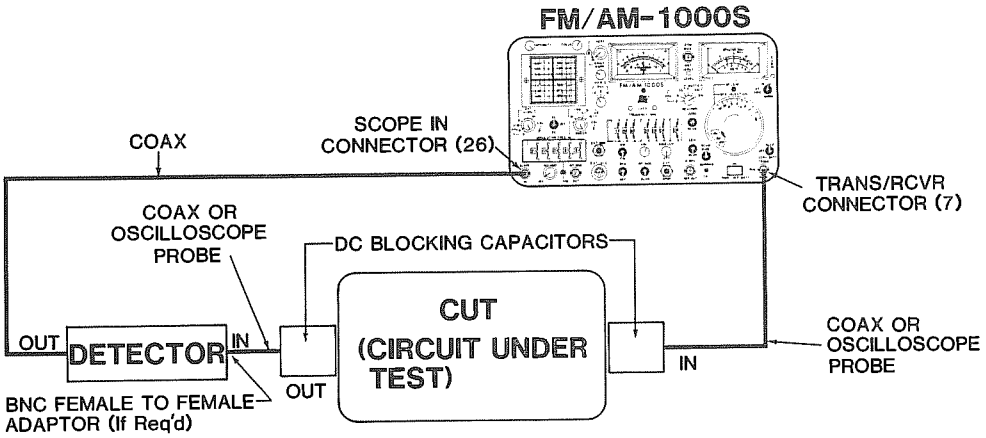

FIGURE 4-59 TEST SET-UP DIAGRAM FOR MEASURING RF SECTION BANDPASS AND CENTER FREQUENCY (USING DETECTOR)

TEST SET-UP
DIAGRAM: (cont'd)

For Circuits Using Detector Probe (High Impedance Circuits):

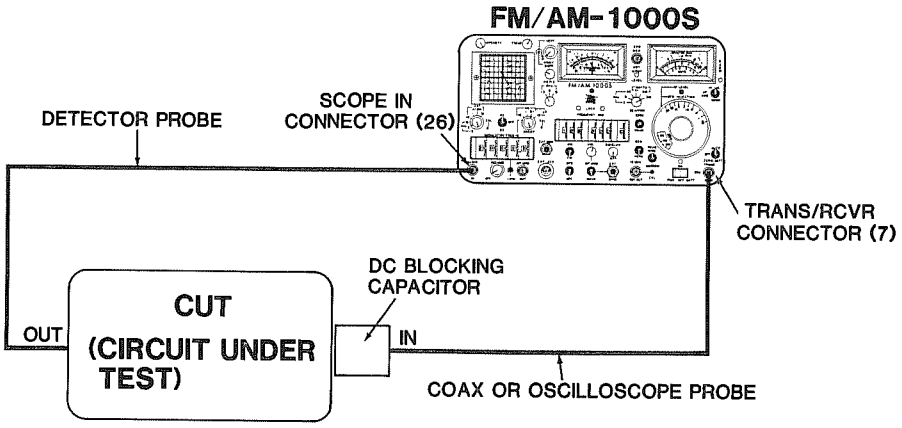

FIGURE 4-60 TEST SET-UP DIAGRAM FOR MEASURING RF SECTION BANDPASS AND CENTER FREQUENCY (USING DETECTOR PROBE)

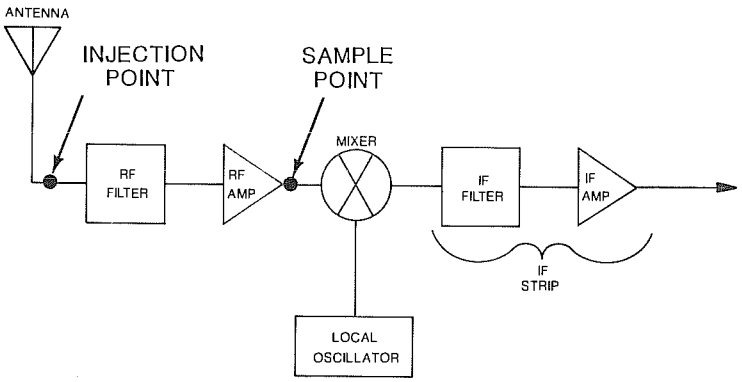

FIGURE 4-61 UUT INJECTION AND SAMPLE POINTS (SINGLE CONVERSION RECEIVER)

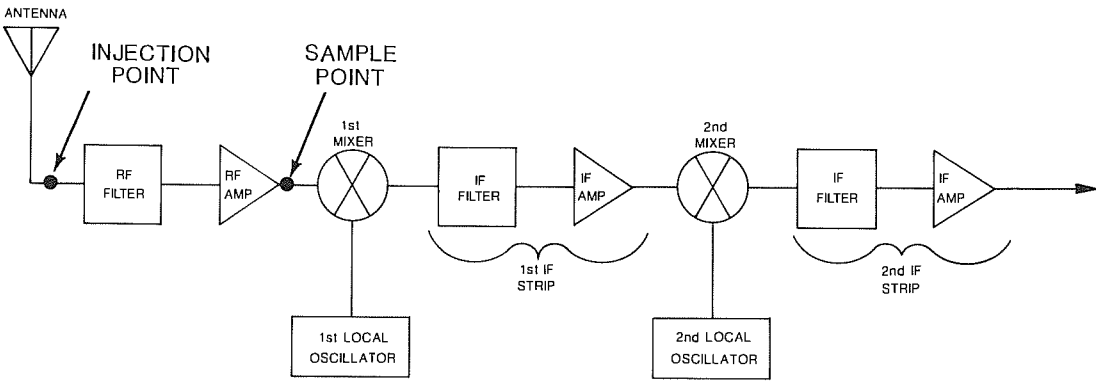

FIGURE 4-62 UUT INJECTION AND SAMPLE POINTS (DUAL CONVERSION RECEIVER)

STEP	PROCEDURE
1.	Set FM/AM-1000S controls for sweep generator/tracking oscilloscope operation as shown in Figure 4-30, page 4-79.
2.	Connect FM/AM-1000S to required test accessory equipment and circuit under test within UUT as shown in appropriate test set-up diagram at beginning of this procedure.
3.	Apply power to UUT.
4.	Apply power to FM/AM-1000S.
5.	Adjust INTENSITY Control (35) and FOCUS Control (37) for a sharp visible dot on CRT.
6.	Adjust VERT Control (38) and HORIZ Control (36) to position dot three graticule divisions above or below major horizontal axis, along major vertical axis.

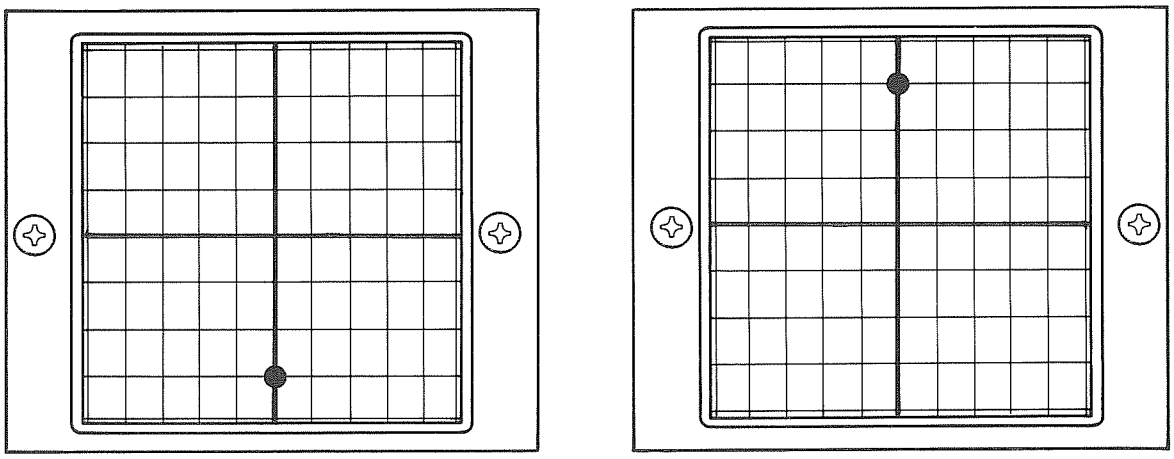

USING POSITIVE DETECTOR USING NEGATIVE DETECTOR

FIGURE 4-63 DOT POSITIONED 3 GRATICULE DIVISIONS ABOVE OR BELOW MAJOR HORIZONTAL AXIS , ON MAJOR VERTICAL AXIS

7.	Rotate INT MOD Control (23) cw until deviation reading on DEVIATION/WATTS Meter (1) is 5 kHz. Dot on CRT will now become a horizontal trace.
8.	If trace exhibits any vertical components (e.g. noise) rotate EXT V/DIV Control (31) ccw to ".1 volts/div" position to eliminate those components.
9.	Set FREQUENCY MHz Thumbwheels (32) to center of frequency being swept (approximate center of bandpass).

STEP	PROCEDURE
10.	Rotate RF LEVEL/BFO INJECTION Dial (5) cw until trace becomes aligned with major horizontal axis.

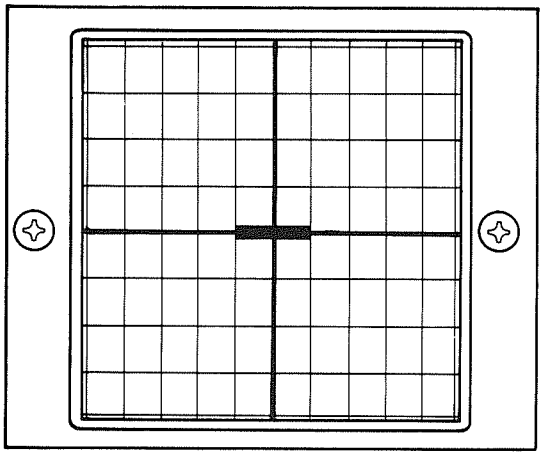

FIGURE 4-64 HORIZONTAL TRACE ALIGNED WITH MAJOR HORIZONTAL AXIS (USING POSITIVE AND NEGATIVE DETECTOR)

11. Rotate RF LEVEL/BFO INJECTION Dial (5) cw to add 3 dB to signal strength. The major horizontal axis now represents the -3 dB point (or half power point) of CUT.

NOTE

- If the 3 dB point above major horizontal (below axis when using negative detector) cannot be achieved because of significant attenuation, repeat Step 10 until horizontal trace is aligned with any other horizontal graticule marking above or below major horizontal axis. After repeating Step 11, selected horizontal marking will represent the -3 dB point (or half power point) of frequency response curve.

STEP PROCEDURE

12. Increment FREQUENCY MHz Thumbwheels (32) until horizontal trace is centered at point where major vertical and horizontal axes intersect. Record setting of FREQUENCY MHz Thumbwheels (32).

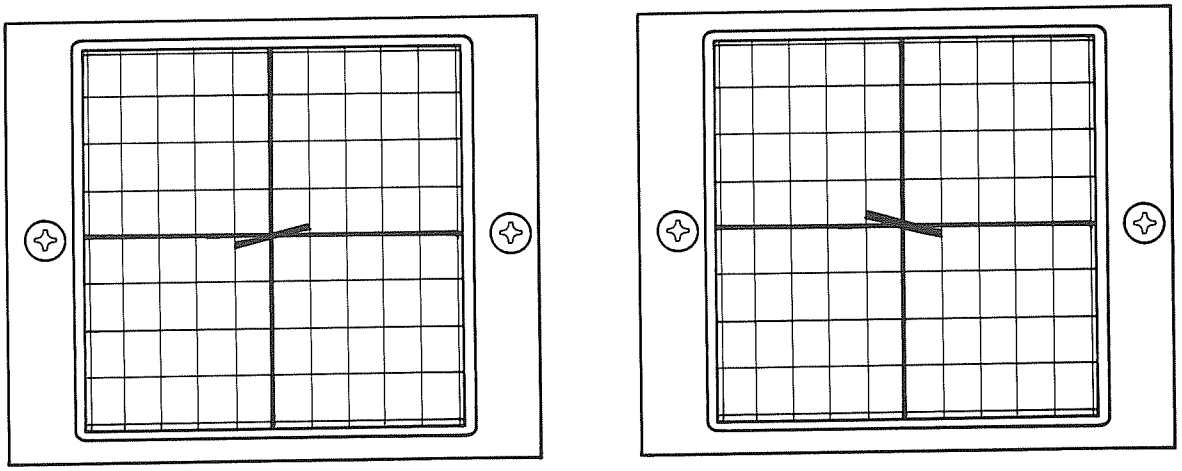

USING POSITIVE DETECTOR USING NEGATIVE DETECTOR

FIGURE 4-65 HORIZONTAL TRACE (OR SECTION OF FREQUENCY RESPONSE CURVE) POSITIONED AT INTERSECTION OF MAJOR AXIS

13. Decrement FREQUENCY MHz Thumbwheels (32) until horizontal trace is centered at point where major vertical and horizontal axes intersect. Record setting of FREQUENCY MHz Thumbwheels (32).

NOTE

- While preforming Step 13, horizontal trace will deviate from intersection of major vertical and horizontal axes before returning to its centered position as shown in Figure 4-66 on following page.

STEP PROCEDURE

13. (cont'd)

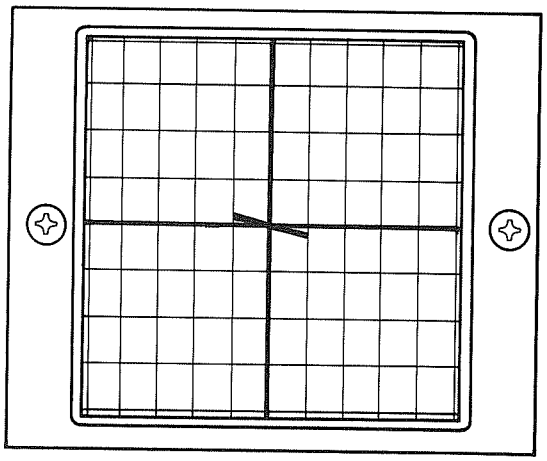

USING POSITIVE DETECTOR

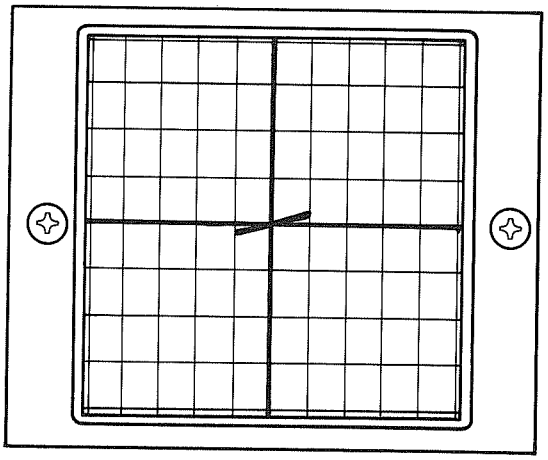

USING NEGITIVE DETECTOR

FIGURE 4-66 HORIZONTAL TRACE (OR SECTION OF FREQUENCY RESPONSE CURVE) POSITIONED AT INTERSECTION OF MAJOR AXIS

14. To determine bandpass of CUT, subtract result of Step 13 from result of Step 12; difference represents bandpass of CUT.

15. To obtain center frequency of CUT, add result of Step 12 to result of Step 13 and divide total by two; quotient represents center frequency of CUT.

4-8-4

TEST PROCEDURE: ***MEASURING BANDPASS AND CENTER FREQUENCY OF AN IF STRIP (AM/FM RCVR)***

TEST OBJECTIVE: N/A

SPECIAL ACCESSORY EQUIPMENT REQ'D: Same as required for procedure 4-7-3, titled "USING THE FM/AM-1000S AS A SWEEP GENERATOR/TRACKING OSCILLOSCOPE", on page 4-81.

TEST SET-UP DIAGRAM: Use block diagrams below to locate injection and sample points within a typical UUT.

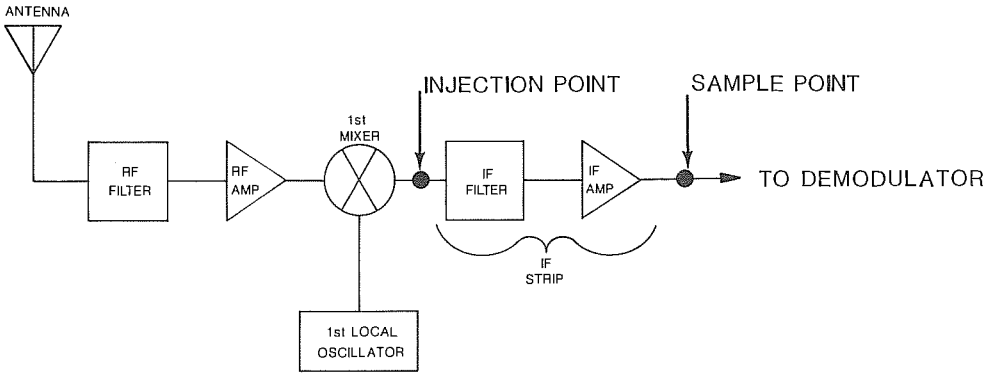

FIGURE 4-67 UUT SAMPLE AND INJECTION POINTS (SINGLE CONVERSION RECEIVER)

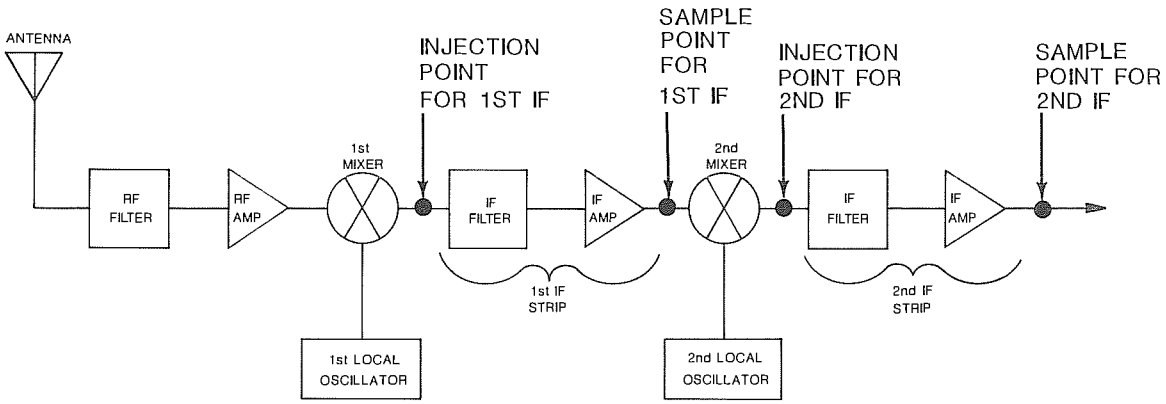

FIGURE 4-68 UUT SAMPLE AND INJECTION POINTS (DUAL CONVERSION RECEIVER)

STEP	PROCEDURE

1. Perform procedure 4-7-4, titled "MEASURING BANDPASS AND CENTER FREQUENCY OF A BANDPASS CIRCUIT", on page 4-87.

NOTE

- The circuit under test (CUT) referenced in above procedure is now represented by block diagrams furnished above.
- Center frequency of span to be swept will be IF frequency of UUT.

2. Return DEV/PWR Control (47) to "20 kHz" position.

3. Rotate INT MOD Control (23) cw until DEVIATION/WATTS Meter (1) reads 20 kHz.

4. Observe frequency response curve for good flatness, symmetry and roll-off characteristics.

NOTE

- Examples below reflect measurements taken with a positive detector.
- Narrow bandwidth receivers will not exhibit flatness characteristic.

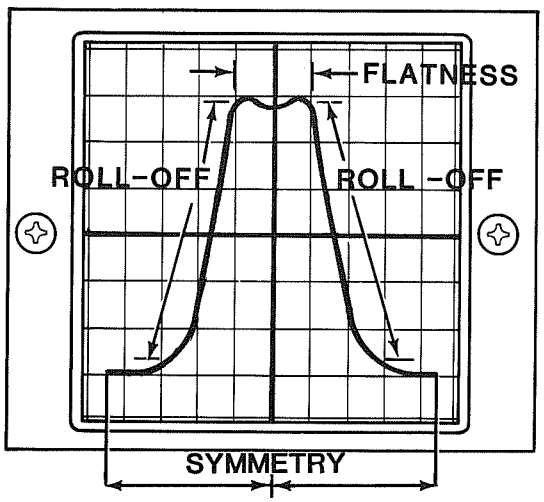

FREQUENCY RESPONSE CURVE CHARACTERISTICS

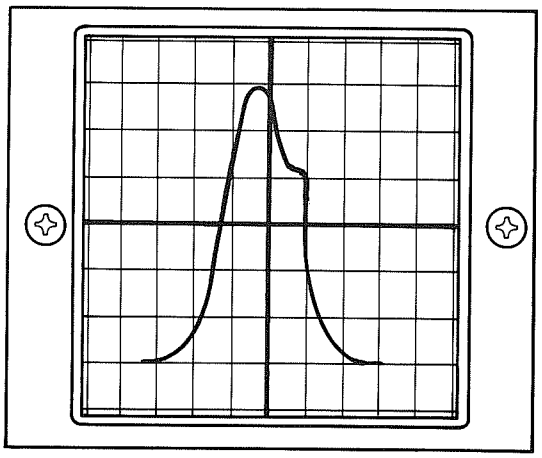

NON - SYMMETRICAL FREQUENCY RESPONSE CURVE WITH POOR FLATNESS

FIGURE 4-69 TYPICAL DISPLAYS OF FREQUENCY RESPONSE CURVE

STEP PROCEDURE

4. (cont'd)

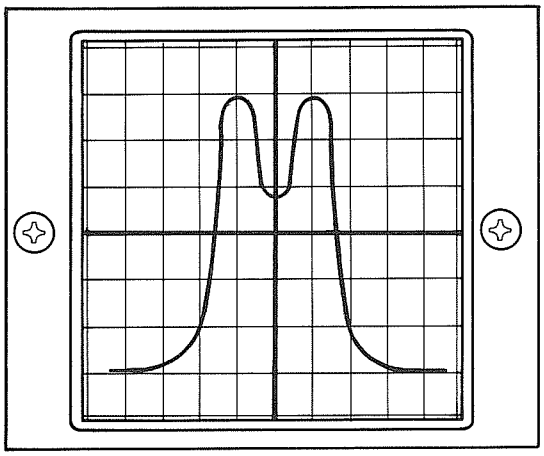

SYMMETRICAL FREQUENCY RESPONSE CURVE LACKING FLATNESS

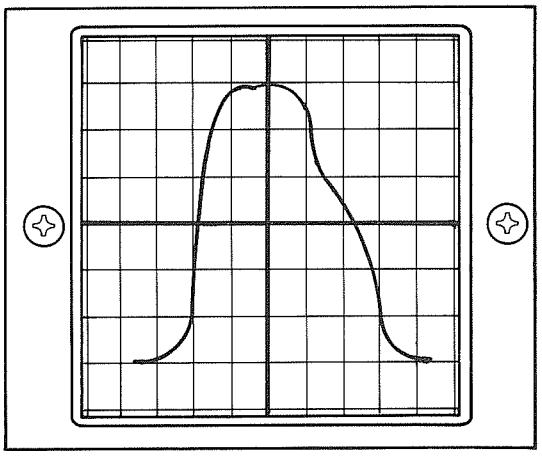

NON-SYMMETRICAL FREQUENCY CURVE WITH POOR ROLL-OFF.

FIGURE 4-70 TYPICAL DISPLAYS OF FREQUENCY RESPONSE CURVES

4-8-5

TEST PROCEDURE: ***MEASURING RECEIVER BANDPASS AND CENTER FREQUENCY (FOR BANDPASSES LESS THAN 40 kHz)***

TEST OBJECTIVE: N/A

SPECIAL ACCESSORY EQUIPMENT REQ'D: Same as required for procedure 4-7-3, titled "USING THE FM/AM-1000S AS A SWEEP GENERATOR/TRACKING OSCILLOSCOPE", on page 4-81.

TEST SET-UP DIAGRAM: Use block diagrams below to locate injection and sample points within a typical UUT.

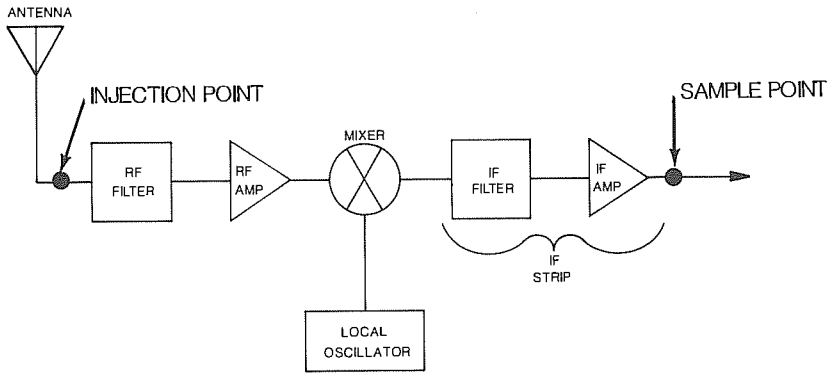

FIGURE 4-71 UUT INJECTION AND SAMPLE POINTS (SINGLE CONVERSION RECEIVER)

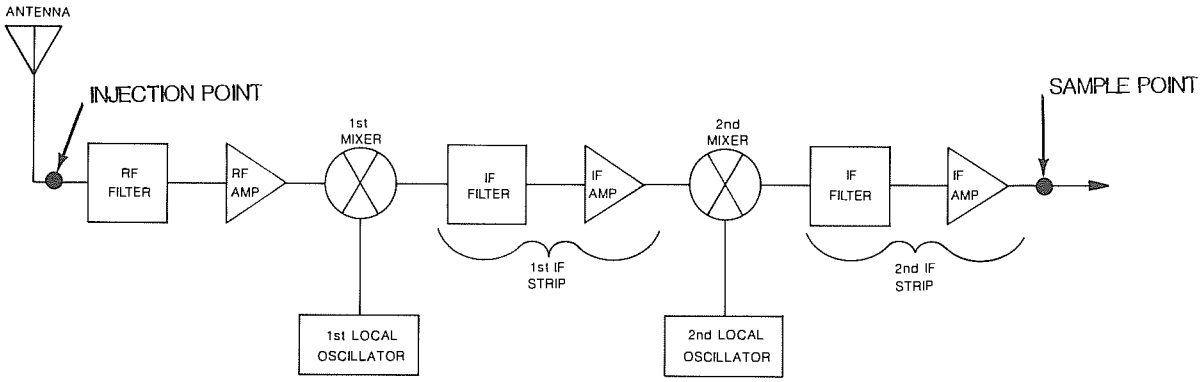

FIGURE 4-72 UUT INJECTION AND SAMPLE POINTS (DUAL CONVERSION RECEIVER)

STEP PROCEDURE

1. Perform procedure titled 4-7-4, "MEASURING CENTER FREQUENCY AND BANDPASS OF A BANDPASS CIRCUIT", on page 4-87.

NOTE

- The circuit under test (CUT) referenced in above procedure is now represented by block diagrams furnished above.
- Center frequency of span to be swept will be receiver frequency.

2. Return DEV/PWR Control (47) to "20 kHz" position.

3. Rotate INT MOD Control (23) cw until DEVIATION/WATTS Meter reads "20 kHz."

4. Observe bandpass response curve for good flatness, symmetry and roll-off charcteristics:

NOTE

- If frequency of UUT local oscillator is greater than sweep frequency (low side injection), the polarity of CRT display will be reversed; therefore, frequency is minimum on left side of CRT and maximum on right side of CRT.
- Examples below reflect measurements taken with a positive detector.
- Narrow bandwidth receivers will not exhibit flatness characteristic.

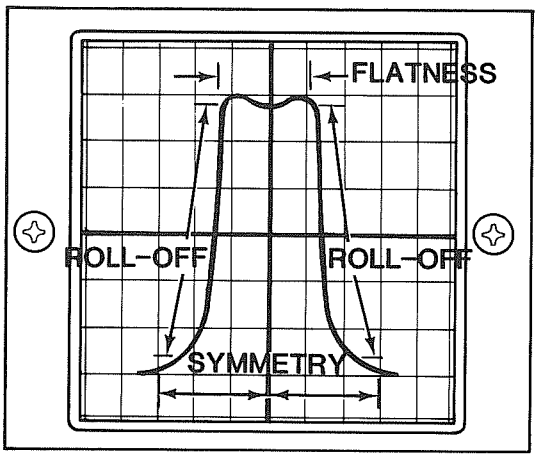

FREQUENCY RESPONSE CHARACTERISTICS

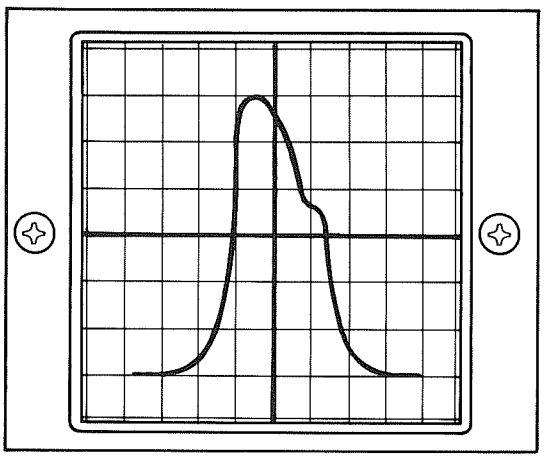

NON-SYMMETRICAL BANDPASS RESPONSE CURVE WITH POOR FLATNESS

FIGURE 4-73 TYPICAL DISPLAYS OF FREQUENCY RESPONSE CURVES FOR AVERAGE BAND RECEIVERS

STEP PROCEDURE

4. (cont'd)

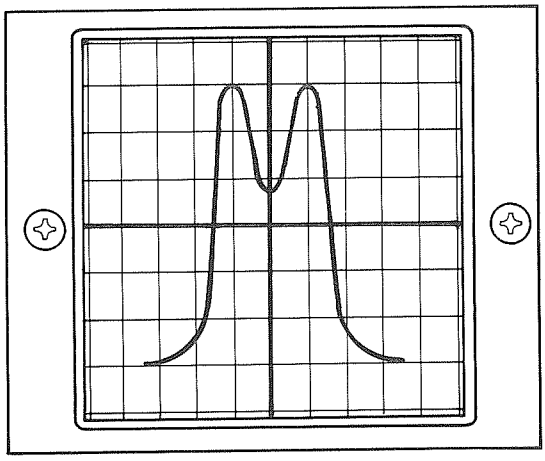

SYMMETRICAL BANDPASS RESPONSE CURVE LACKING FLATNESS

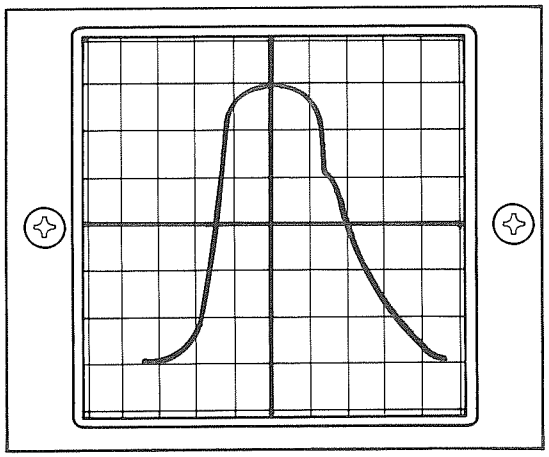

NON-SYMMETRICAL BANDPASS RESPONSE CURVE WITH POOR ROLL-OFF

FIGURE 4-74 TYPICAL DISPLAYS OF FREQUENCY RESPONSE CURVES FOR AVERAGE BAND RECEIVERS

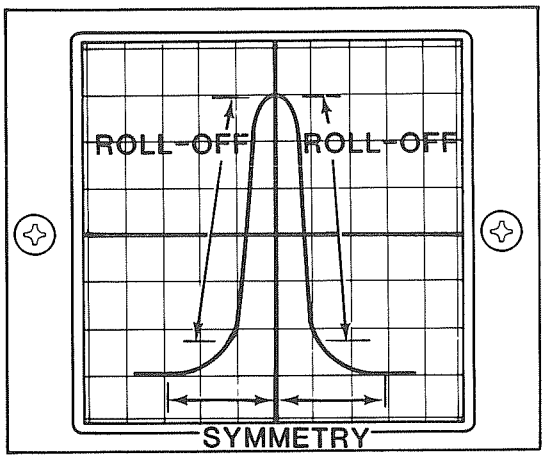

FREQUENCY RESPONSE CURVE CHARACTERISTICS

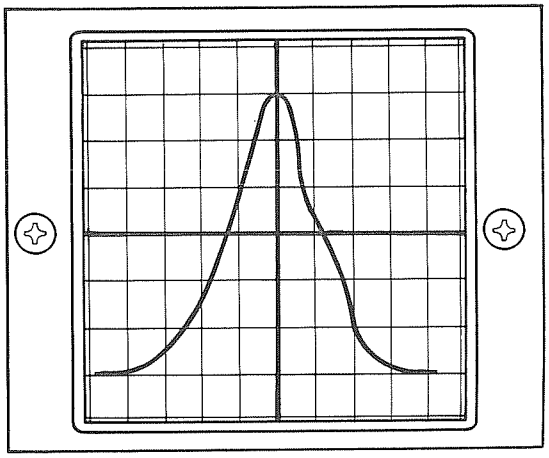

BANDPASS RESPONSE CURVE WITH POOR ROLL-OFF

FIGURE 4-75 TYPICAL DISPLAYS OF FREQUENCY RESPONSE CURVES FOR NARROW BAND RECEIVERS

STEP PROCEDURE

4. (cont'd)

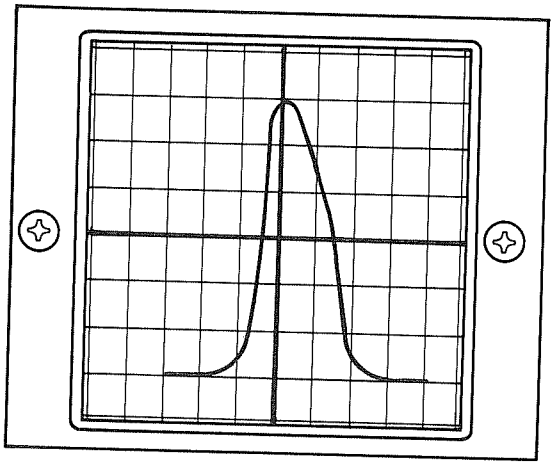

BANDPASS RESPONSE CURVE
WITH POOR SYMMETRY

FIGURE 4-76 TYPICAL DISPLAY OF FREQUENCY RESPONSE CURVE FOR NARROW BAND RECEIVERS

4-8-6

TEST PROCEDURE: ***MEASURING RECEIVER BANDPASS AND CENTER FREQUENCY (FOR AM/FM RECEIVER BANDPASSES GREATER THAN 40 kHz)***

TEST OBJECTIVE: N/A

SPECIAL ACCESSORY EQUIPMENT REQ'D: Same as required for procedure 4-7-3, titled "USING FM/AM-1000S AS A SWEEP GENERATOR/TRACKING OSCILLOSCOPE", on page 4-81.

TEST SET-UP DIAGRAM: Use block diagrams below to locate injection and sample points within a typical UUT.

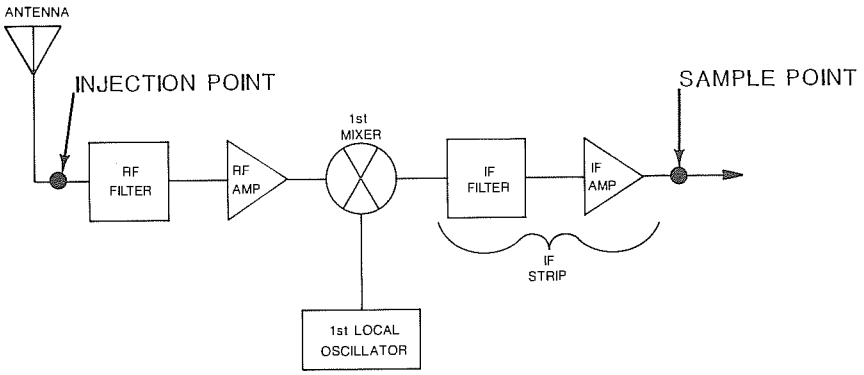

FIGURE 4-77 UUT INJECTION AND SAMPLE POINTS (SINGLE CONVERSION RECEIVER)

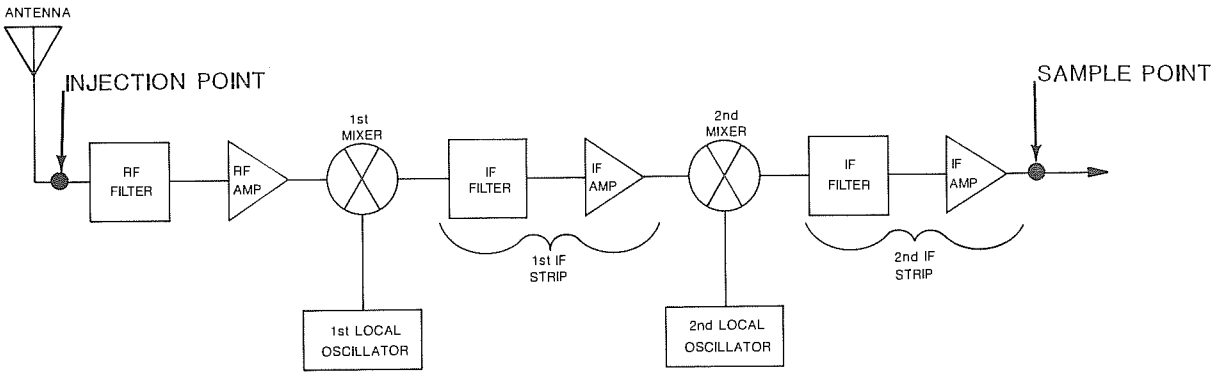

FIGURE 4-78 UUT INJECTION AND SAMPLE POINTS (DUAL CONVERSION RECEIVER)

STEP PROCEDURE

1. Perform Steps 1 through 9 of procedure 4-7-3, titled "USING FM/AM-1000S AS A SWEEP GENERATOR/TRACKING OSCILLOSCOPE", on page 4-81.

2. Rotate RF LEVEL/BFO INJECTION Dial (5) cw until horizontal trace is aligned with major horizontal axis.

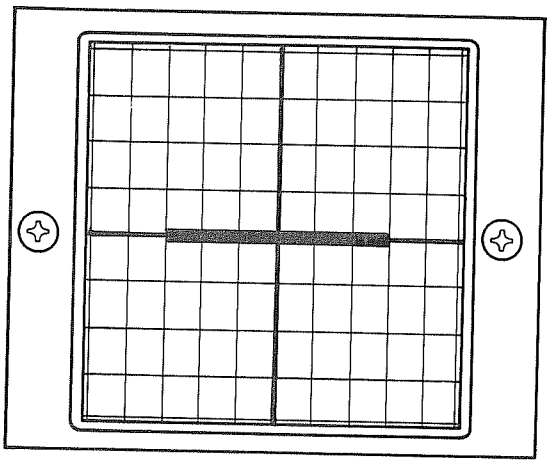

FIGURE 4-79 HORIZONTAL TRACE ALIGNED WITH MAJOR HORIZONTAL AXIS

3. Rotate RF LEVEL/BFO INJECTION Dial (5) cw to add 3 dB to signal strength. Oscilloscope is now displaying a small section of frequency response curve of UUT. The major horizontal axis on CRT now represents -3 dB point (or half power point of UUT.

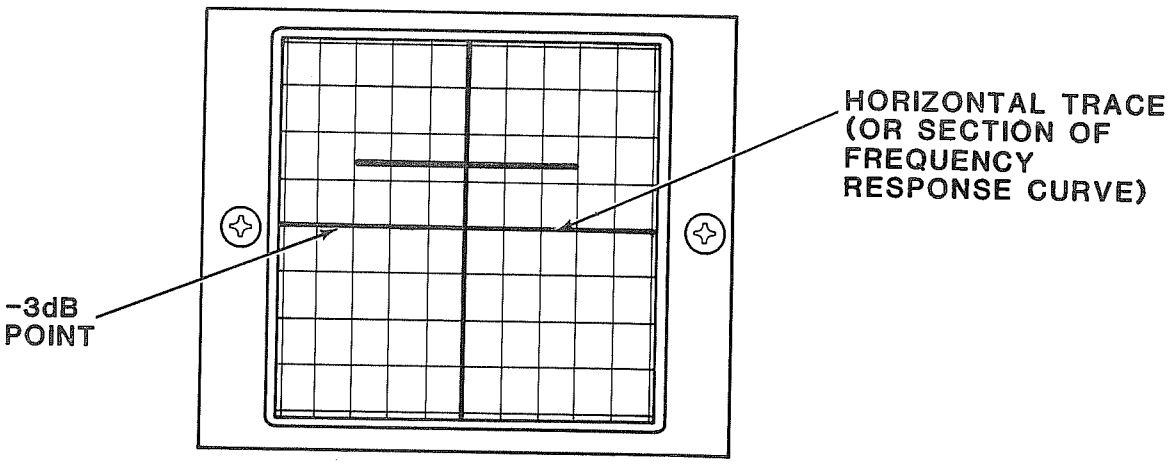

FIGURE 4-80 SECTION OF FREQUENCY RESPONSE CURVE DISPLAYED USING POSITIVE DETECTOR

3. (cont'd)

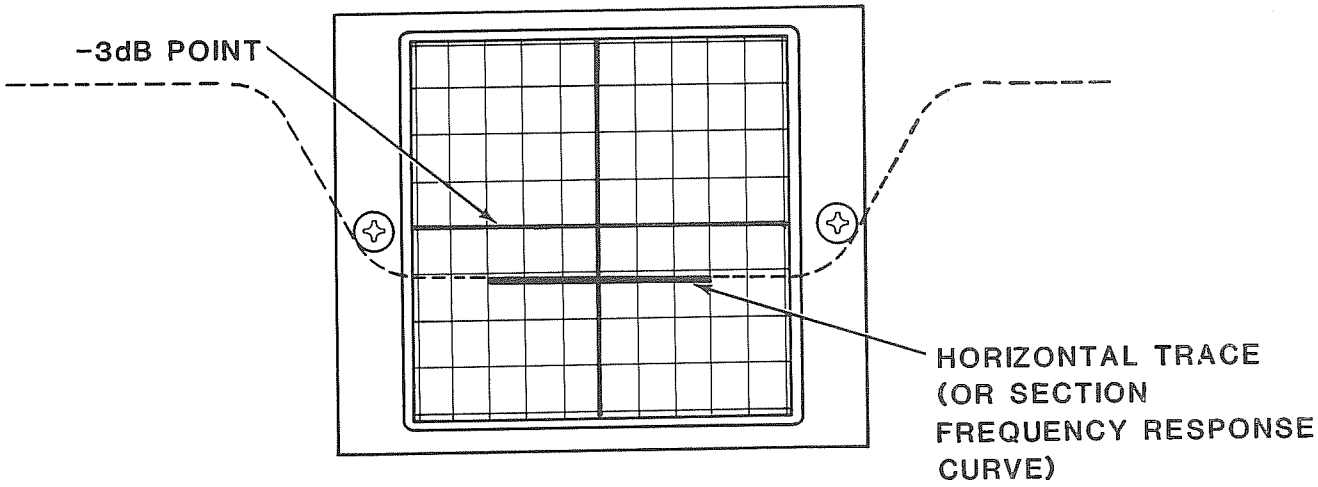

FIGURE 4-81 SECTION FREQUENCY RESPONSE CURVE DISPLAYED USING NEGATIVE DETECTOR

4. Increment FREQUENCY MHz Thumbwheels (32) to center high edge of frequency response curve at intersection of major vertical and horizontal axes.

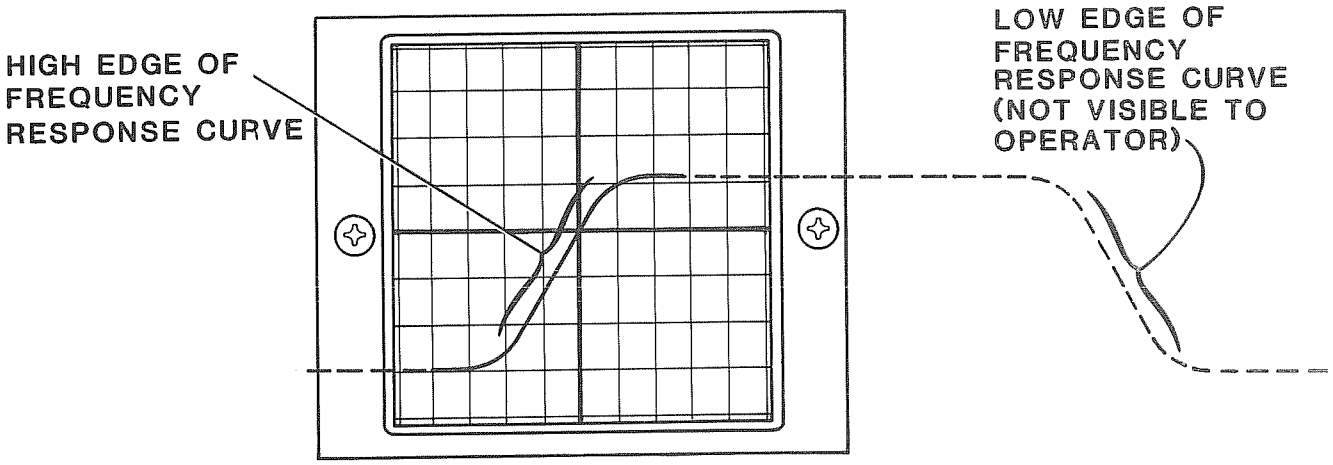

FIGURE 4-82 HIGH EDGE OF FREQUENCY RESPONSE CURVE CENTERED AT INTERSECTION OF MAJOR VERTICAL AND HORIZONTAL AXES (USING POSITIVE DETECTOR)

STEP PROCEDURE

4. (cont'd)

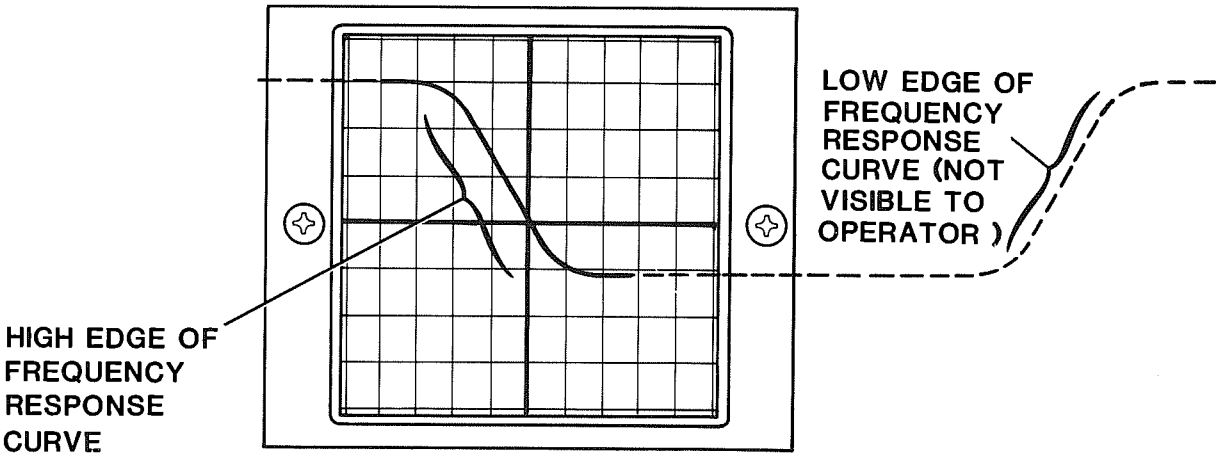

FIGURE 4-83 HIGH EDGE OF FREQUENCY RESPONSE CURVE CENTERED AT INTERSECTION OF MAJOR VERTICAL AND HORIZONTAL AXIS (USING NEGATIVE DETECTOR)

5. Record setting of FREQUENCY MHz Thumbwheels (32).

6. Decrement FREQUENCY MHz Thumbwheels (32) to center low edge of frequency response curve at intersection of major vertical and horizontal axes.

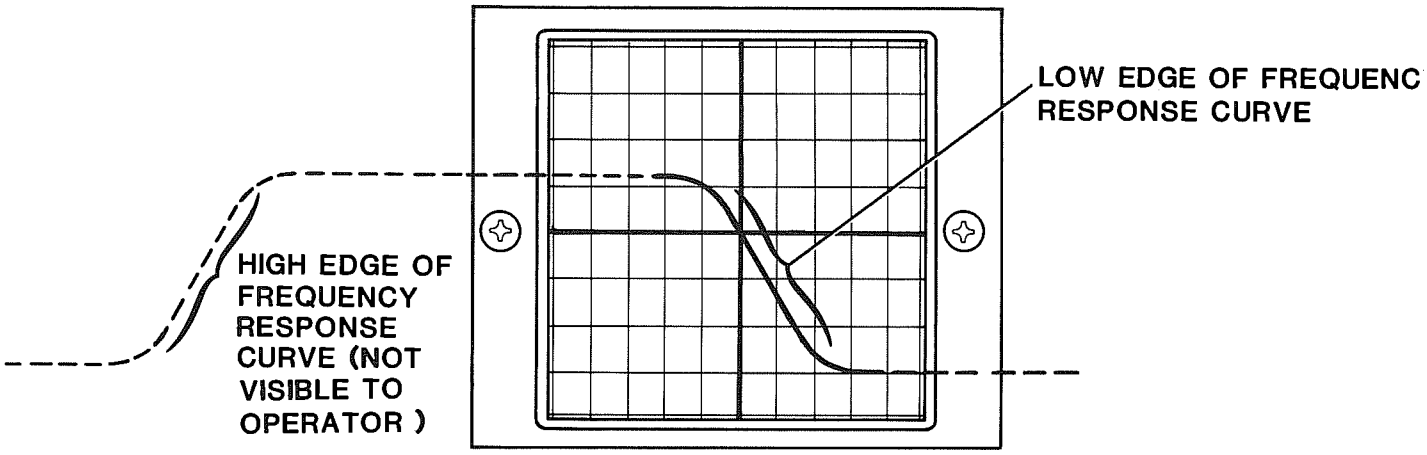

FIGURE 4-84 LOW EDGE OF FREQUENCY RESPONSE CURVE CENTERED AT INTERSECTION OF MAJOR VERTICAL AND HORIZONTAL AXIS (USING POSITIVE DETECTOR)

STEP PROCEDURE

6. (cont'd)

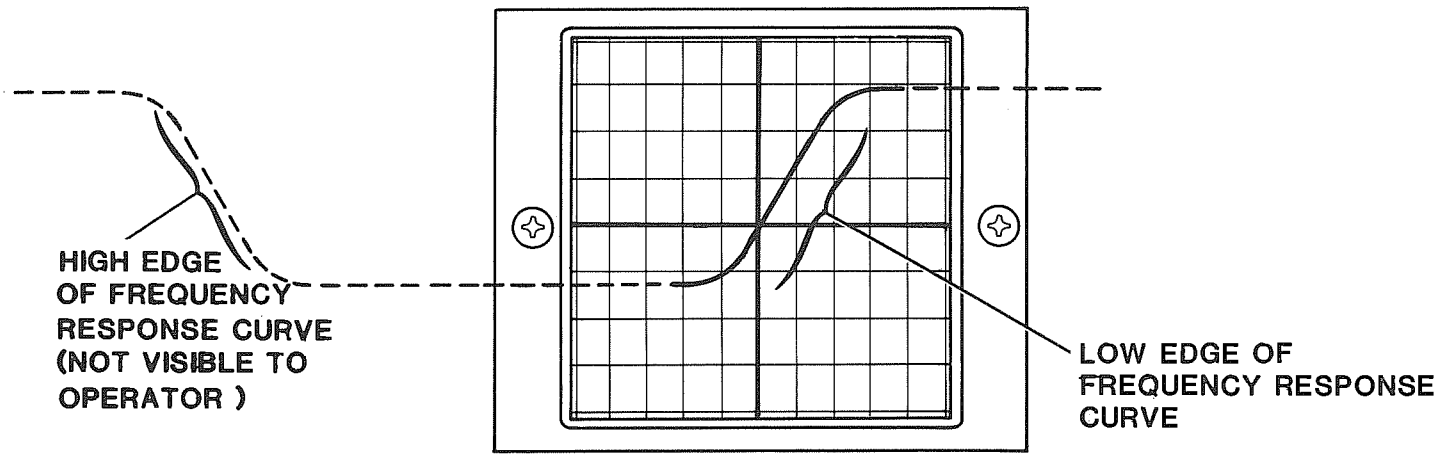

FIGURE 4-85 LOW EDGE OF FREQUENCY RESPONSE CURVE CENTERED AT INTERSECTION OF MAJOR VERTICAL AND HORIZONTAL AXIS (USING NEGATIVE DETECTOR)

7. Record present setting of FREQUENCY MHz Thumbwheels (32).

8. Subtract result obtained in Step 7 from result obtained in Step 5. Difference represents receiver bandpass.

9. To obtain bandpass center frequency, add result of Step 5 to result of Step 7 and divide total by two; quotient represents bandpass center frequency.

4-8-7

TEST PROCEDURE: ***MEASURING SQUELCH THRESHOLD AND DIFFERENTIAL (FOR AM/FM RECEIVERS WITH FIXED SQUELCH CONTROL***

TEST OBJECTIVE: Using FM/AM-1000S as a signal generator to determine power level required to activate/deactivate UUT squelch. The level at which squelch is deactivated is "squelch threshold"; the difference between squelch threshold and point at which squelch is activated is the "squelch differential."

SPECIAL ACCESSORY EQUIPMENT REQ'D: 1 Coax cable with BNC male connector or one end and appropriate UUT connector on opposite end.

TEST SET-UP DIAGRAM:

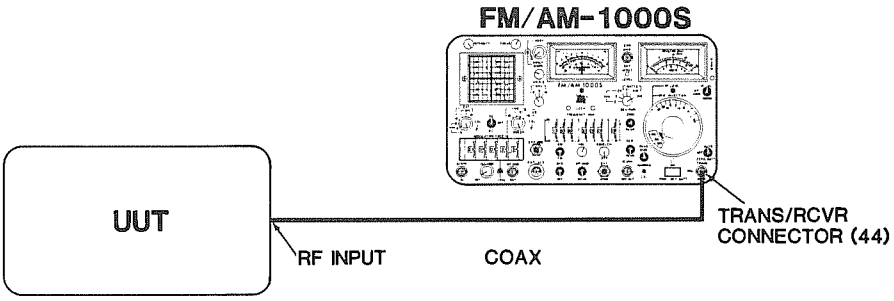

FIGURE 4-86 TEST SET-UP DIAGRAM FOR MEASURING SQUELCH THRESHOLD AND DIFFERENTIAL (FIXED SQUELCH)

STEP	PROCEDURE
1.	Perform test procedure 4-5-4 or 4-5-5, titled "GENERATING AM (or FM, whichever applicable) MODULATED SIGNALS", on pages 4-57 or 4-59.

NOTE

- RF LEVEL/BFO INJECTION Dial (5) setting in above procedure should be .05 μV.

2. Connect UUT to FM/AM-1000S using required accessory equipment as shown in test set-up diagram above.

STEP	PROCEDURE

3. Apply power to UUT.

4. Set UUT audio gain control to a midrange setting.

5. Rotate RF LEVEL/BFO INJECTION Dial (5) cw slowly, until UUT audio output just becomes audible. This point represents maximum squelch threshold in dBm.

NOTE

- If an audio tone is not heard before RF LEVEL/BFO INJECTION Dial (5) is fully cw, place HI LVL/µV X 100/NORM Switch (3) to "µV x 100" position and repeat Step 5.

6. Record setting of RF LEVEL/BFO INJECTION Dial (5) on dBm scale.

NOTE

- If HI LVL/µV X 100/NORM Switch (3) is in "µV x 100" position, mathematically add 40 dB to setting of RF LEVEL/BFO INJECTION Dial (5) on dBm scale to obtain true squelch threshold level.

7. Rotate RF LEVEL/BFO INJECTION Dial (5) ccw slowly until audio tone ceases. Record setting of RF LEVEL/BFO INJECTION Dial (5) on dBm scale.

NOTE

- If HI LVL/µV X 100/NORM Switch (3) is in "µV x 100" position, mathematically add 40 dB to setting of RF LEVEL/BFO INJECTION Dial (5) on dBm scale to obtain true output level.

8. Subtract result of Step 5 from result of Step 7 to obtain squelch differential.

EXAMPLE:

Result of Step 5: -42 dBm
Result of Step 7: -44 dBm

(-44 dBm) - (-42 dBM) =
-44 dBm + 42 dBm = 2 dB Squelch Differential

4-8-8

TEST PROCEDURE: ***MEASURING SQUELCH THRESHOLD AND DIFFERENTIAL (FOR AM/FM RECEIVERS WITH VARIABLE SQUELCH CONTROL)***

TEST OBJECTIVE: Using FM/AM-1000S as a signal generator to determine power level required to activate/deactivate UUT squelch. The level at which squelch is deactivated is "squelch threshold"; the difference between squelch threshold and point at which squelch is activated is the "squelch differential."

SPECIAL ACCESSORY EQUIPMENT REQ'D: 1 Coax cable with BNC male connector on one end and appropriate UUT connector on opposite end.

TEST SET-UP DIAGRAM:

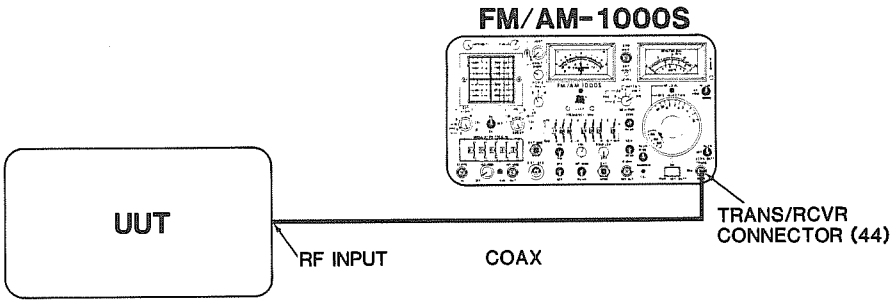

FIGURE 4-87 TEST SET-UP DIAGRAM FOR MEASURING SQUELCH THRESHOLD AND DIFFERENTIAL (VARIABLE SQUELCH)

STEP	PROCEDURE
1.	Perform test procedure 4-5-4 or 4-5-5, titled "GENERATING AM (or FM, whichever applicable) MODULATED SIGNALS", on pages 4-57 or 4-59.

NOTE

- RF LEVEL/BFO INJECTION Dial (5) setting in above procedure should be .05 µV.

2. Connect UUT to FM/AM-1000S using required accessory equipment as shown in test set-up diagram above.

STEP	PROCEDURE
3.	Apply power to UUT.
4.	Set UUT audio gain control to a midrange setting.
5.	Set UUT squelch control fully ccw (or "OFF" in detent if applicable).
6.	Rotate RF LEVEL/BFO INJECTION Dial (5) cw slowly to confirm a gradual increase in the audio output of UUT.

NOTE

- This action is required to confirm that UUT squelch is disabled; audio tone should not become audible abruptly.

7.	Rotate RF LEVEL/BFO INJECTION Dial (5) fully ccw.
8.	Rotate UUT squelch control fully cw (Full "ON").
9.	Rotate RF LEVEL/BFO INJECTION Dial (5) cw slowly until UUT audio output just becomes audible. This point represents maximum squelch threshold in dBm.

NOTE

- If an audio tone is not heard before RF LEVEL/BFO INJECTION Dial (5) is fully cw, place HI LVL/µV X 100/NORM Switch (3) to "µV x 100" position and repeat Step 9.

10.	Record setting of RF LEVEL/BFO INJECTION Dial (5) on dBm scale.

NOTE

- If HI LVL/µV X 100/NORM Switch (3) is in "µV x 100" position, mathematically add 40 dB to setting of RF LEVEL/BFO INJECTION Dial (5) on dBm scale to obtain true squelch threshold level.

11.	Rotate RF LEVEL/BFO INJECTION Dial (5) ccw slowly until audio tone ceases. Record setting of RF LEVEL/BFO INJECTION Dial (5) on dBm scale.

NOTE

- If HI LVL/µV X 100/NORM Switch (3) is in "µV x 100" position, mathematically add 40 dB to setting of RF LEVEL/BFO INJECTION Dial (5) on dBm scale to obtain true output level.

STEP	PROCEDURE
12.	Subtract result of Step 9 from result of Step 11 to obtain squelch differential.

EXAMPLE:

Result of Step 9: -42 dBm
Result of Step 11: -44 dBm

(-44 dBm) - (-42 dBM) =
-44 dBm + 42 dBm = 2 dB Squelch Differential

4-8-9

TEST PROCEDURE: ***MEASURING AGC ACTION (AM RCVR)***

TEST OBJECTIVE: Determining received signal strength at which receiver AGC circuit threshold is achieved.

NOTE

- This procedure is not valid for receivers with audio AGC in the output.

SPECIAL ACCESSORY EQUIPMENT REQ'D:

1 BNC "Tee" connector

1 "Dummy" load (to match impedance of UUT audio output)

2 Coax cables with BNC male connectors on one end and appropriate UUT connectors on opposite end.

TEST SET-UP DIAGRAM:

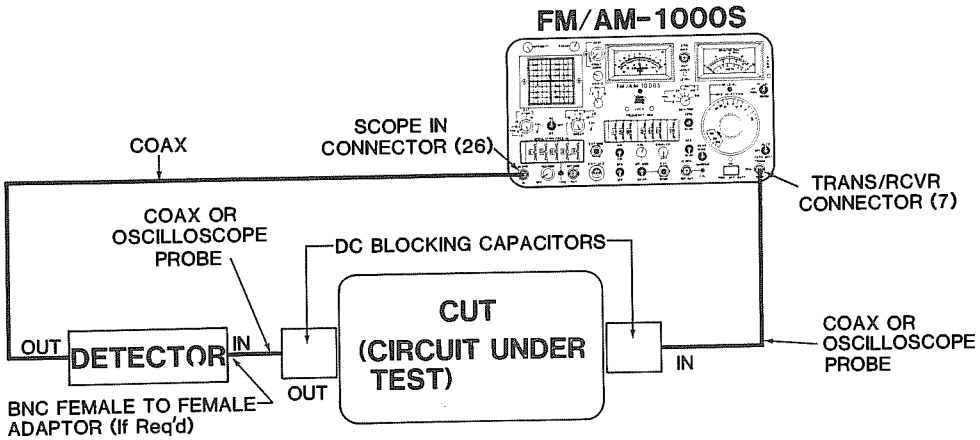

FIGURE 4-88 TEST SET-UP DIAGRAM FOR MEASURING AGC ACTION

STEP	PROCEDURE
1.	Perform procedure 4-5-3, titled "GENERATING RF SIGNALS", on page 4-55.

NOTE

- RF LEVEL/BFO INJECTION Dial (5) setting in above procedure should be .05 μV.

STEP	PROCEDURE
2.	Place AM/FM Switch (19) to "AM."
3.	Set MODULATION FREQ Hz Thumbwheels (25) to 1000.0 Hz.
4.	Rotate ANALY DISPR Control (39) fully ccw to detent position.
5.	Rotate EXT V/DIV Control (31) to "1.5 kHz", "6 kHz" or "15 kHz" position.
6.	Rotate EXT V/DIV Vernier Control (30) to "CAL" position.
7.	Adjust INTENSITY Control (35) cw and FOCUS Control (37) appropriately for a sharp visible trace display.
8.	Adjust VERT Control (38) and HORIZ Control (36) to obtain a centered trace, with lower edge of displayed carrier signal aligned with major horizontal axis.

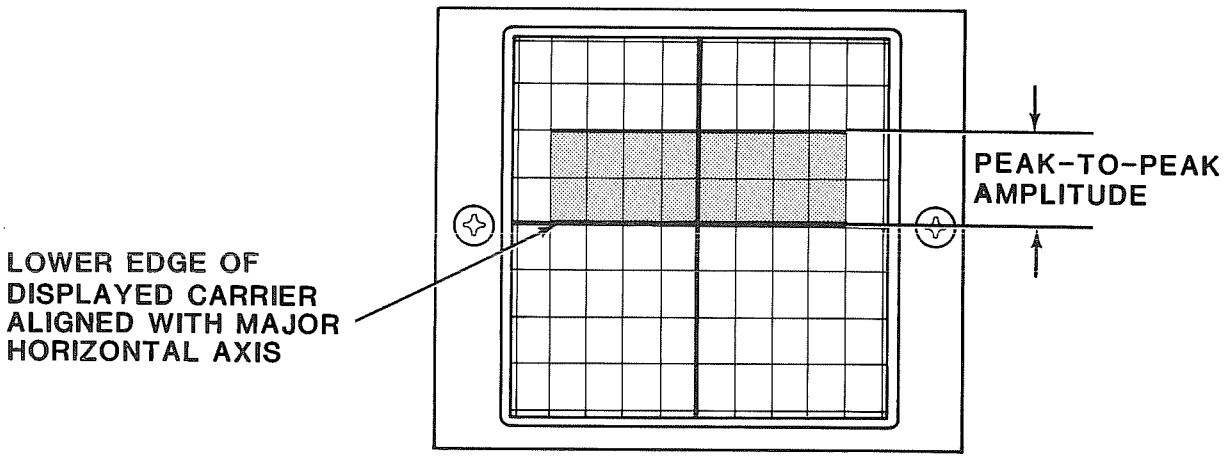

FIGURE 4-89 DISPLAYED CARRIER SIGNAL ALIGNED WITH MAJOR HORIZONTAL AXIS

9. Measure peak-to-peak amplitude (in graticule division) of displayed carrier. Record result.

10. Apply result obtained in Step 9 to following equation and record value of "x":

$$x = 0.3 \text{ (Result of Step 9)}$$

Where x = number of graticule divisions (peak-to-peak) of modulated signal

STEP	PROCEDURE
11.	a. Adjust VERT Control (38) to align negative peak of one of the modulated signals with major horizontal axis.
	b. Rotate INT MOD Control (23) to adjust peak-to-peak amplitude of same modulated signal (in graticule divisions) to value of "x" obtained in Step 10.

NOTE

- Steps 11a and 11b must be performed simultaneously, as both are interactive.

EXAMPLES:

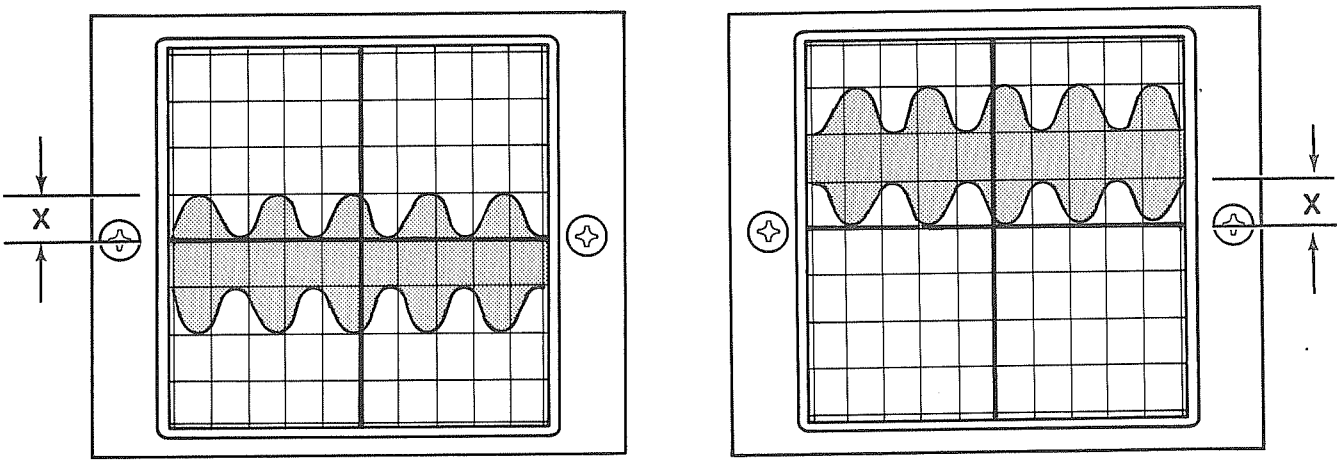

FIGURE 4-90 ALIGNMENT OF UPPER AND LOWER MODULATION SIGNALS WITH MAJOR HORIZONTAL AXIS

c. The FM/AM-1000S signal generator is now calibrated to 30% modulation and is generating at selected frequency and output level.

12. Connect UUT to FM/AM-1000S to UUT and required test equipment as shown in test set-up diagram above.

13. Apply power to UUT.

STEP PROCEDURE

14. Set UUT audio gain control to a midrange setting. Up to this point, FM/AM-1000S scope should display a modulated signal similar to that shown below.

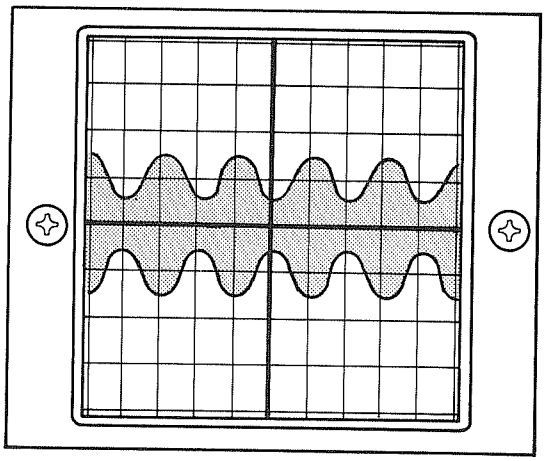

FIGURE 4-91 MODULATED SIGNAL DISPLAY

15. Rotate EXT V/DIV Control (31) to "10 volts/division" position. Scope may display a horizontal trace containing a small level of noise.

NOTE

- If audio output rating of UUT is low power, EXT V/DIV Control (31) may require positioning to "1 or .1 volts/division" setting.

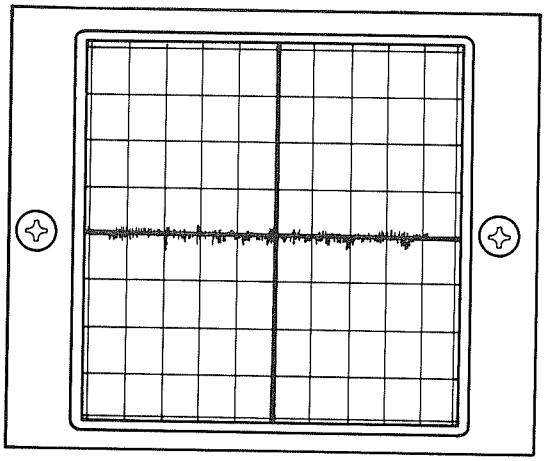

FIGURE 4-92 SCOPE TRACE EXHIBITING MINOR AMOUNT OF NOISE

STEP	PROCEDURE
16.	Slowly rotate RF LEVEL/BFO INJECTION Dial (5) cw while observing scope display; the following progression will be evident with respect to horizontal trace on CRT:

a. While rotating RF LEVEL/BFO INJECTION Dial (5) cw, noise on horizontal trace will continuously change in amplitude, ultimately developing into a sine wave.

b. The sine wave will increase in amplitude proportionately to the cw rotation of RF LEVEL/BFO INJECTION Dial (5).

c. During rotation of the RF LEVEL/BFO INJECTION Dial (5), a point will be reached where sine wave no longer increases in amplitude (or increases very little). Position RF LEVEL/BFO INJECTION Dial (5) to the point where this transition occurs.

d. Read setting of RF LEVEL/BFO INJECTION Dial (5) on dBm scale. This setting represents the "AGC threshold" of the UUT.

NOTE

- If the AGC threshold in not reached when RF LEVEL/BFO INJECTION Dial (5) is fully cw, place HI LVL/μV X 100/NORM Switch (3) to "μV x 100" position and repeat Step 6. An additional 40 dB must now be mathematically added to reading obtained in Step 6d to obtain true AGC threshold.

4-8-10

TEST PROCEDURE: ***MEASURING AM RECEIVER SENSITIVITY (AM RCVR)***

TEST OBJECTIVE: Determining carrier strength required to produce a 10 dB difference in receiver audio output between an unmodulated carrier and same carrier modulated at 30% with a 1 kHz tone.

SPECIAL ACCESSORY EQUIPMENT REQ'D: AC Voltmeter

TEST SET-UP DIAGRAM:

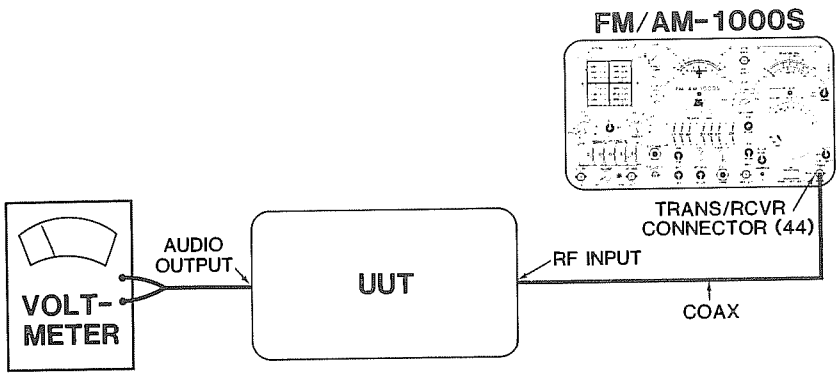

FIGURE 4-93 TEST SET-UP DIAGRAM FOR MEASURING AM SENSITIVITY

STEP	PROCEDURE
1.	Perform procedure 4-5-3, titled "GENERATING RF SIGNALS", on page 4-55.
2.	Place AM/FM Switch (19) to "AM."
3.	Set MODULATION FREQ Hz Thumbwheels (25) to 1000.0 Hz.
4.	Rotate ANALY DISPR Control (39) fully ccw to detent position.
5.	Rotate EXT V/DIV Control (31) to "1.5 kHz", "6 kHz" or "15 kHz" position.
6.	Rotate EXT V/DIV Vernier Control (30) to "CAL" position.
7.	Adjust INTENSITY Control (35) cw and FOCUS Control (37) appropriately for a sharp visible trace display.

STEP	PROCEDURE
8.	Adjust VERT Control (38) and HORIZ Control (36) to obtain a centered trace, with lower edge of displayed carrier aligned with major horizontal axis.

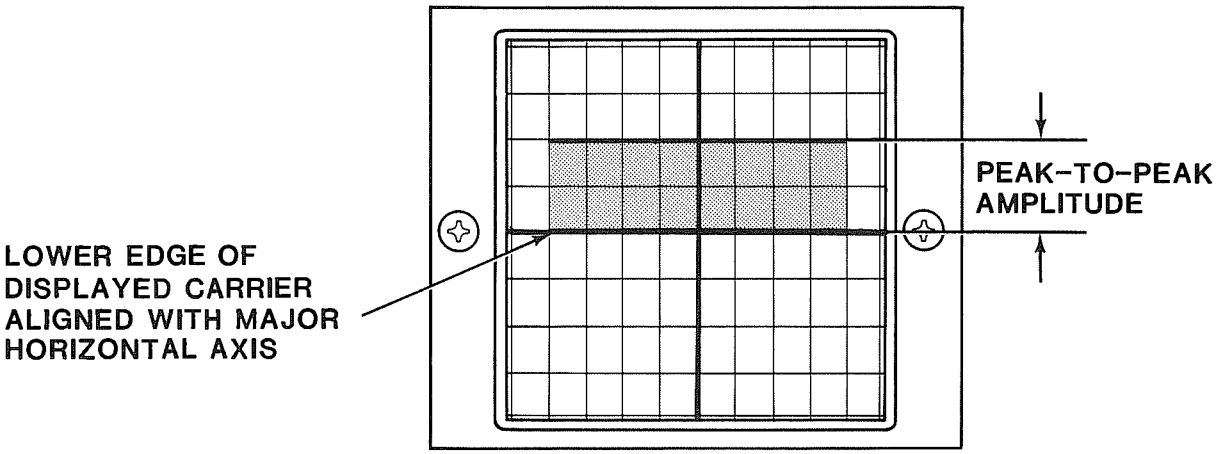

FIGURE 4-94 DISPLAYED CARRIER SIGNAL ALIGNED WITH MAJOR HORIZONTAL AXIS

9. Measure peak-to-peak amplitude (in graticule divisions) of displayed carrier. Record result.

10. Apply result obtained in Step 9 to following equation and record value of "x":

    x = 0.3 (Result of Step 9)
    where x = number of graticule divisions (peak-to-peak) of modulated signal

11. a. Adjust VERT Control (38) to align negative peak of one of the modulated signals with major horizontal axis.

    b. Rotate INT MOD Control (23) to adjust peak-to-peak amplitude of same modulated signal (in graticule divisions) to value of "x" obtained in Step 10.

NOTE

- Steps 11a and 11b must be performed simultaneously, as both are interactive.

STEP PROCEDURE

11. (cont'd)

EXAMPLES:

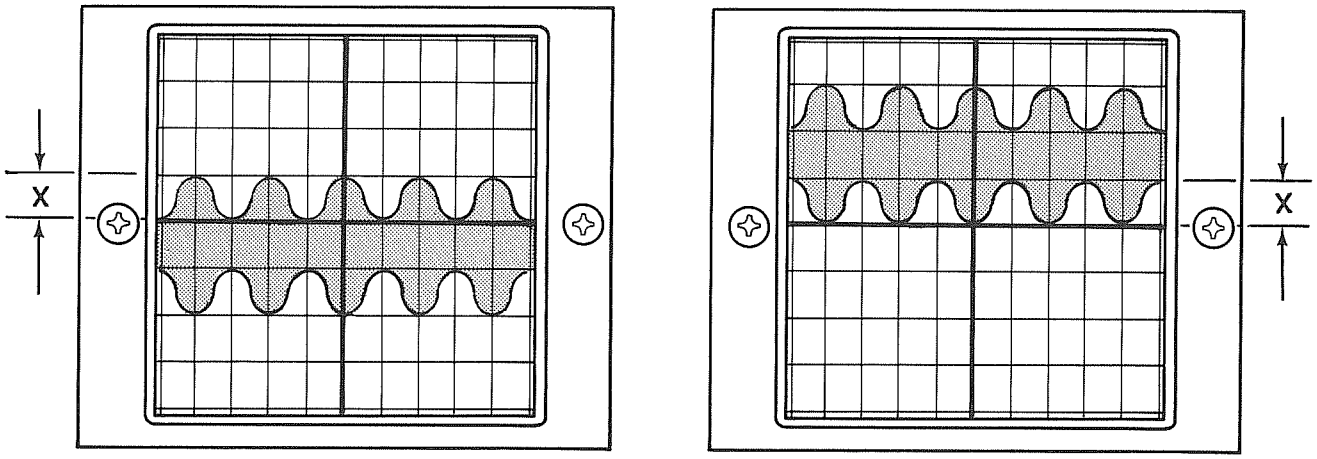

FIGURE 4-95 ALIGNMENT OF UPPER AND LOWER MODULATION SIGNALS WITH MAJOR HORIZONTAL AXIS

c. The FM/AM-1000S signal generator is now calibrated to 30% modulation and is generating at selected frequency and output level.

12. Connect FM/AM-1000S to UUT and required accessory equipment as shown in Test Set-Up Diagram above.

13. Rotate RF LEVEL/BFO INJECTION Dial (5) cw until FM/AM-1000S is generating sufficient RF to quiet UUT.

14. Adjust UUT audio gain control to achieve maximum rated audio output power. Note value obtained on voltmeter.

15. Rotate INT MOD Control (23) fully ccw to detent (OFF) position (0% modulation).

16. Rotate RF LEVEL/BFO INJECTION Dial (5) appropriately until voltmeter displays a noise level 10 dB below level obtained in Step 14.

17. Rotate INT MOD Control (23) cw until modulated signal is again at 30% modulation. (Reference value of "x" obtained in Step 10.)

STEP	PROCEDURE
18.	Check voltmeter reading; if voltmeter reading is equal to reading obtained in Step 14, setting of RF LEVEL/BFO INJECTION Dial (5) represents sensitivity of UUT (in μV or dBm). If voltmeter reading in this step does not equal reading obtained in Step 14, proceed with remaining steps below.
19.	Record present voltmeter reading.
20.	Rotate INT MOD Control (23) fully ccw to detent (OFF) position (0% modulation).
21.	Rotate RF LEVEL/BFO INJECTION Dial (5) appropriately until voltmeter displays a noise level 10 dB below level obtained in Step 19.
22.	Rotate IND MOD Control (23) cw until modulated signal is again at 30% modulation. (Reference value of "x" obtained in Step 10.)
23.	Check voltmeter reading; if voltmeter reading is equal to reading obtained in Step 19, setting of RF LEVEL/BFO INJECTION Dial (5) represents sensitivity of UUT (in μV or dBm). If voltmeter reading does not equal result obtained in Step 19, repeat Steps 19 thru 23 until result of Step 21 is 10 dB below result of Step 23.

4-8-11

TEST PROCEDURE: ***MEASURING FM RECEIVER 20 dB QUIETING (FM RCVR)***

TEST OBJECTIVE: To measure smallest discernable signal receiver under test is capable of receiving at a given noise level.

SPECIAL ACCESSORY EQUIPMENT REQ'D: 1 Coax cable with BNC male connector on one end and appropriate UUT connector on opposite end.

AC Voltmeter

TEST SET-UP DIAGRAM:

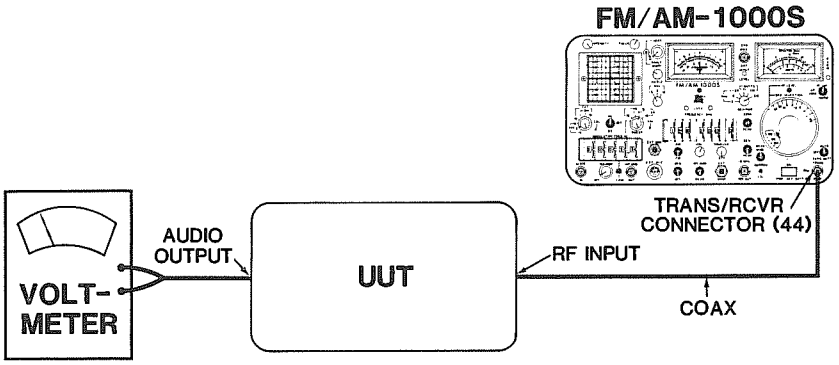

FIGURE 4-96 TEST SET-UP DIAGRAM FOR MEASURING FM RECEIVER 20 dB QUIETING

STEP	PROCEDURE
1.	Set FM/AM-1000S controls for RF generator operation as shown in Figure 4-25, page 4-53.
2.	Set FREQUENCY MHz Thumbwheels (32) to frequency of UUT.
3.	Connect BNC male connector on end of coax cable to TRANS/RCVR Connector (7) on FM/AM-1000S.

STEP	PROCEDURE

3. (cont'd)

CAUTION

- DO NOT APPLY MORE THAN 20 WATTS OF CONTINUOUS INPUT TO THIS CONNECTOR. Maximum "ON" time for measurement of transmitter output using this connector is:

  10 seconds at 100 W, 15% Duty Cycle
  20 seconds at 50 W, 30% Duty Cycle
  2 minutes at 30 W, 50% Duty Cycle

4. Connect opposite end of coax cable to RF input of UUT.

5. Connect AC voltmeter across audio output terminals of UUT.

6. Apply power to UUT.

7. Apply power to FM/AM-1000S.

8. Adjust UUT audio output to obtain convenient reference output level on voltmeter (preferably on an even division marking of voltmeter scale).

9. Rotate RF LEVEL/BFO INJECTION Dial (5) cw until voltmeter reading decreases to one-tenth (1/10) of original reference reading.

NOTE

- If it is not possible to obtain one-tenth (1/10) voltage reading of reference level, place HI LVL/ µV X 100/NORM Switch (3) to "µV x 100" position.

10. Read UUT sensitivity on "dBm" scale of RF LEVEL/BFO INJECTION Dial (5).

NOTE

- If HI LVL/µV X 100/NORM Switch (3) is in the "µV x 100" position, mathematically add +40 dB to dBm reading of RF LEVEL/BFO INJECTION Dial (5) to obtain true sensitivity level.

EXAMPLE:

If result of Step 10 is -110 dBm, add +40 dB to this figure to obtain -60 dBm.

TEST PROCEDURE: ***MEASURING 12 dB SINAD SENSITIVITY (FM RCVR)***

TEST OBJECTIVE: To measure the amount of input signal a receiver requires to produce an output 12 dB above noise and distortion output levels. The 12 dB SINAD (SIgnal plus Noise And Distortion) figure provides an indication of input signal level required for understandable voice reception.

In this test, a tone modulated FM signal is applied to the RF input of receiver under test (UUT). The receiver's total audio output level is measured and compared against receivers noise/distortion level, while the RF input level is varied to obtain a 12 dB difference between the two levels.

SPECIAL ACCESSORY EQUIPMENT REQ'D: Distortion Analyzer

Cables for connecting distortion analyzer to UUT.

1 Coax cable with BNC male connector on one end and appropriate UUT connector on opposite end.

TEST SET-UP DIAGRAM:

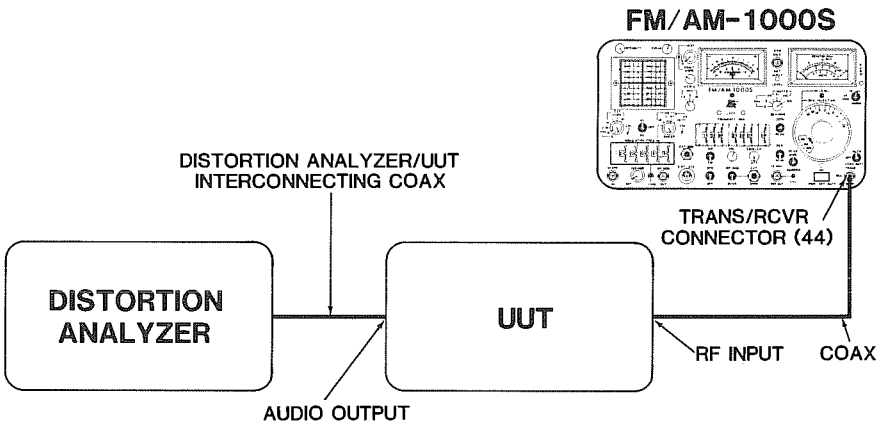

FIGURE 4-97 TEST SET-UP DIAGRAM FOR MEASURING 12dB SINAD SENSITIVITY

STEP	PROCEDURE
1.	Set FM/AM-1000S controls for RF generator operation as shown in Figure 4-25, page 4-53.

STEP	PROCEDURE
2.	Make cable connections between FM/AM-1000S, UUT and distortion analyzer as shown in set-up diagram.
3.	Apply power to distortion analyzer.
4.	Apply power to UUT.
5.	Apply power to FM/AM-1000S.
6.	Set MODULATION FREQ Hz Thumbwheels (25) to 1000.0 Hz.
7.	Set FREQUENCY MHz Thumbwheels (32) to receiving frequency of UUT.
8.	Rotate INT MOD Control (23) cw so DEVIATION/WATTS Meter (1) reading is two-thirds (2/3) of UUT peak deviation.
9.	Rotate RF LEVEL/BFO INJECTION Dial (5) cw until FM/AM-1000S is generating sufficient RF to quiet UUT.

NOTE

- If unable to quiet receiver in above step, place HI LVL/μV X 100/NORM Switch (3) to "μV x 100" position. Then rotate RF LEVEL/BFO INJECTION Dial (5) to a level sufficient to quiet receiver.

10.	Adjust UUT audio output to maximum rated power level (refer to UUT specifications).
11.	Adjust distortion analyzer to display a ratio of signal to distortion levels.
12.	Rotate RF LEVEL/BFO INJECTION Dial (5) ccw until distortion analyzer displays 12 dB SINAD or 25% distortion.

a. Present setting of RF LEVEL/BFO INJECTION Dial (5) represents 12 dB SINAD sensitivity of UUT.

NOTE

- If HI LVL/μV x 100/NORM Switch is in the "μV x 100" position, mathematically add +40 dB to dBm reading of RF/BFO INJECTION DIAL (5) to obtain true sensitivity level.

4-8-13

TEST PROCEDURE: ***MEASURING MAXIMUM RECEIVABLE DEVIATION (FM RCVR)***

TEST OBJECTIVE: To determine maximum acceptable FM deviation of UUT.

SPECIAL ACCESSORY EQUIPMENT REQ'D: See procedure titled "MEASURING 12 dB SINAD SENSITIVITY"

TEST SET-UP DIAGRAM: See procedure titled "MEASURING 12 dB SINAD SENSITIVITY"

STEP	PROCEDURE
1.	Perform procedure 4-8-12, titled "MEASURING 12 dB SINAD SENSITIVITY", on page 4-151.
2.	Rotate RF LEVEL/BFO INJECTION Dial (5) cw to increase dBm reading by 20 dB (or per UUT specifications).
3.	Rotate INT MOD Control (23) cw until distortion analyzer displays a distortion level 12 dB below signal level.
4.	Multiply reading of DEVIATION/WATTS Meter (1) by two. Result represents modulation acceptance bandwidth of UUT.

4-9 GENERAL TRANSMITTER TESTS

4-9-1 GENERAL

This section contains an assortment of the more common tests to be used in evaluating AM/FM transmitter performance using the FM/AM-1000S. The tests included were selected on the basis of appropriateness, wide ranging applicability and minimal support equipment required to complete the tests.

This test procedures contained in this section are:

4-9-2 MEASURING TRANSMITTER CARRIER POWER
4-9-3 MEASURING TRANSMITTER FREQUENCY
4-9-4 MEASURING AM MODULATION OF A TRANSMITTER
4-9-5 MEASURING TRANSMITTER DEVIATION (Below ±20 kHz)

4-9-2

TEST PROCEDURE: ***GENERAL TRANSMITTER TEST MEASURING TRANSMITTER CARRIER POWER***

TEST OBJECTIVE: N/A

SPECIAL ACCESSORY EQUIPMENT REQ'D: 1 Coax cable with BNC male connector on one end and appropriate UUT connector on opposite end.

TEST SET-UP DIAGRAM:

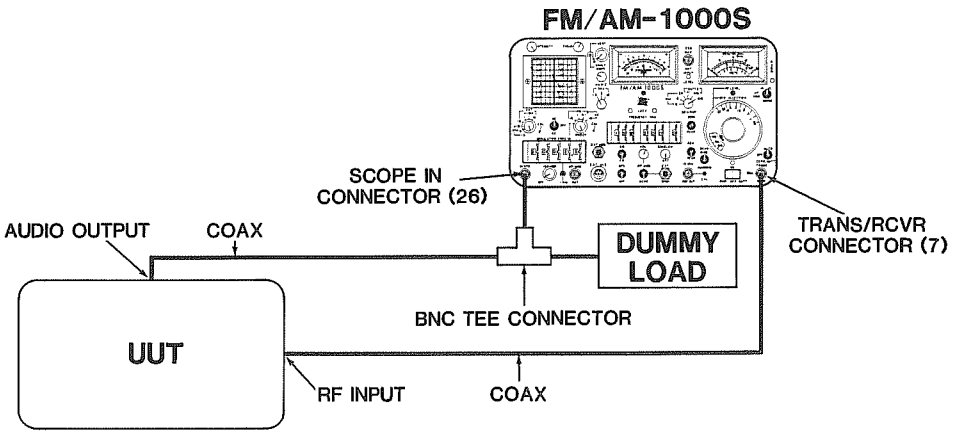

FIGURE 4-98 TEST SET-UP DIAGRAM FOR MEASURING TRANSMITTER CARRIER POWER

STEP	PROCEDURE
1.	Set FM/AM-1000S controls for receiver operation (AM or FM) as shown in Figure 4-28, page 4-63.
2.	Apply power to FM/AM-1000S.
3.	Apply power to UUT.
4.	Connect coax cable between UUT RF output and FM/AM-1000S TRANS/RCVR Connector (7), as shown in test set-up diagram above.
5.	Rotate DEV/PWR Control (47) to "WATTS x 10" position.

STEP	PROCEDURE
6.	Key up UUT. Read UUT power output on red scale of DEVIATION/ WATTS Meter (1).

NOTE

- If DEVIATION/WATTS Meter (1) needle deflection is less than 10 Watts when UUT is keyed, rotate DEV/PWR Control (46) to "WATTS x 1" position.

- UUT power output can also be viewed on spectrum analyzer dB scale, using following approximate equivalencies (FREQUENCY MHz Thumbwheels must be set to frequency of UUT and ANALY DISPR Control must be out of detent position):

  -30 dB marking on spectrum analyzer = 100 Watts
  -40 dB marking on spectrum analyzer = 10 Watts
  -50 dB marking on spectrum analyzer = 1 Watt
  -60 db marking on spectrum analyzer = .1 Watt

4-9-3

TEST PROCEDURE: ***MEASURING TRANSMITTER FREQUENCY***

TEST OBJECTIVE: N/A

SPECIAL ACCESSORY EQUIPMENT REQ'D: Same as for procedure titled "MEASURING TRANSMITTER CARRIER POWER"

TEST SET-UP DIAGRAM: Same as for procedure titled "MEASURING TRANSMITTER CARRIER POWER"

STEP	PROCEDURE
1.	Set FM/AM-1000S controls for receiver operation (AM or FM) as shown Figure 4-28, page 4-63.
2.	Set FM/AM-1000S controls for spectrum analyzer operation as shown in Figure 4-16, page 4-33.
3.	Connect coax cable between UUT output and FM/AM-1000S TRANS/RCVR Connector (7) as shown in test set-up diagram above.
4.	Apply power to FM/AM-1000S.
5.	Apply power to UUT.
6.	Adjust INTENSITY Control (35) cw and FOCUS Control (37) appropriately to obtain a sharp visible trace display.

NOTE

- Warm-up time of CRT is approximately 30 seconds from a "cold" start-up; trace display will not become visible until CRT achieves warm-up.

7.	Set FREQUENCY MHz Thumbwheels (32) to within ±5 MHz of UUT frequency.
8.	Key up UUT while observing spectrum analyzer. Locate UUT spectrum.
9.	Increment or decrement FREQUENCY MHz Thumbwheels (32) while continuously keying UUT, until spectrum of UUT is aligned with major vertical axis on CRT.
10.	Rotate ANALY DISPR Control (39) fully ccw short of detent position.
11.	Repeat Step 9.

STEP	PROCEDURE
12.	Rotate 1.5/5/15 kHz Control (33) to "5 kHz" position.
13.	Increment or decrement FREQUENCY MHz Thumbwheels (32) while continuously keying UUT, until FREQ ERROR Meter (41) reads zero.
14.	Rotate 1.5/5/15 kHz Control (33) to "1.5 kHz" position.
15.	Repeat Step 13.
16.	Add or subtract residual FREQ ERROR Meter (41) reading (less than 100 Hz) to or from setting of FREQUENCY MHz Thumbwheels (32). Result represents transmitting frequency.

TEST PROCEDURE: ***MEASURING AM MODULATION OF A TRANSMITTER***

TEST OBJECTIVE: N/A

SPECIAL ACCESSORY EQUIPMENT REQ'D:

1 BNC "Tee" connector

2 Coax cables with BNC male connectors on one end and appropriate UUT connectors on opposite end.

1 Short coax cable with BNC male connector on each end.

1 DC blocking capacitor (required only if DC components are present)

TEST SET-UP DIAGRAM:

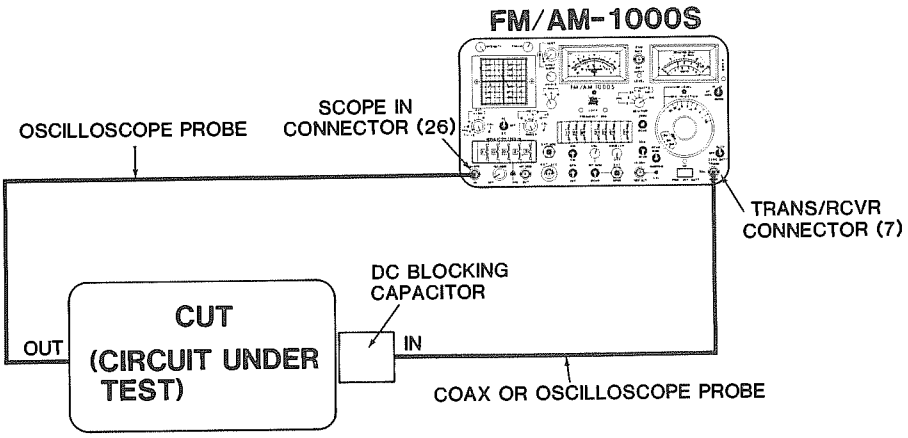

FIGURE 4-99 TEST SET-UP DIAGRAM FOR MEASURING AM MODULATION OF A TRANSMITTER

STEP	PROCEDURE
1.	Perform Steps 1 through 12 of procedure 4-4-3, titled "GENERATING AUDIO TONES OF KNOWN AMPLITUDE", on page 4-47. Frequency of audio tone to be generated is 1 kHz.

NOTE

- Amplitude of injected 1 kHz audio tone must be within limits of UUT input specifications.
- Tone injection point on UUT Is "Audio Input" or "Microphone Jack."

STEP	PROCEDURE

2. Set FM/AM-1000S controls for AM receiver operation as shown in Figure 4-28, page 4-63.

NOTE

- DO NOT ALTER SETTING OF INT MOD CONTROL (23).

3. Set FM/AM-1000S controls for oscilloscope operation as shown in Figure 4-1, page 4-5.

4. Set EXT V/DIV Control (31) to "1.5 kHz", "6 kHz" or "15 kHz" position.

5. Adjust INTENSITY Control (35) cw and FOCUS Control (37) appropriately to obtain a sharp visible trace display.

NOTE

- Warm-up time of CRT is approximately 30 seconds from a "cold" start-up; trace display will not become visible until CRT achieves warm-up.

6. Oscilloscope should now display a noise level of approximately 2.5 to 3 graticule divisions in amplitude.

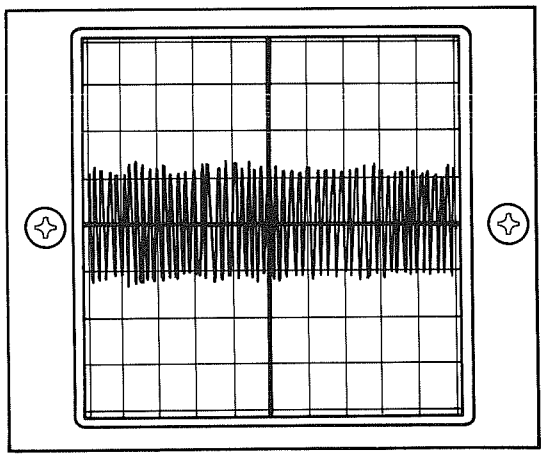

FIGURE 4-100 NOISE LEVEL DISPLAY OF APPOX. 2.5 GRATICULE DIVISIONS (PEAK -TO-PEAK)

7. Adjust VERT Control (38) and HORIZ Control (36) to center scope display over major horizontal axis of CRT.

8. Apply power to UUT.

STEP	PROCEDURE
9.	Key up UUT while observing oscilloscope display. While keying UUT, rotate VERT Control (38) so negative peaks of modulation envelope rest on any horizontal axis.

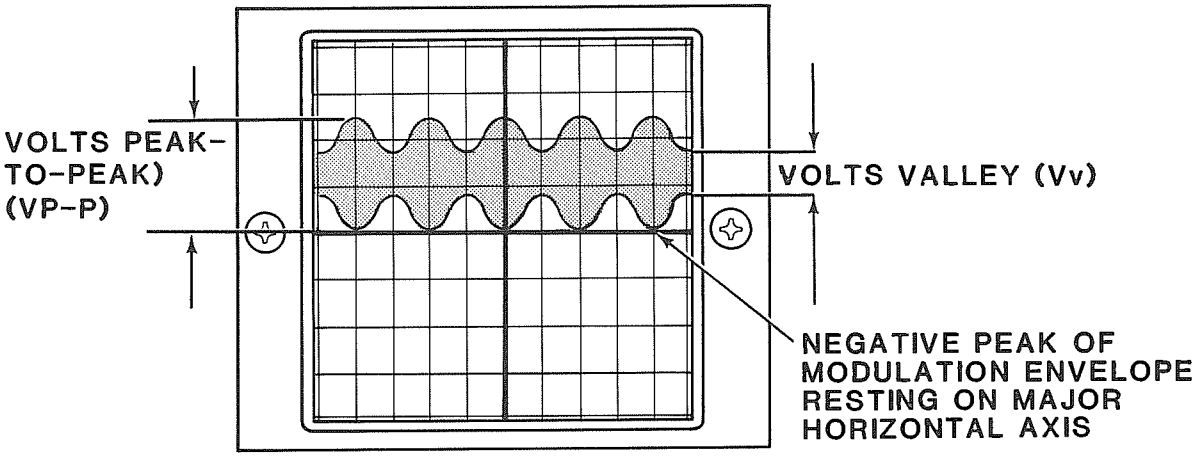

FIGURE 4-101 NEGATIVE PEAKS OF MODULATION ENVELOPE RESTING ON MAJOR HORIZONTAL AXIS

10. Measure Volts peak-to-peak (Vp-p) (in major graticule divisions) of displayed modulation envelope. Record result.

11. Measure distance Volts valley (Vv) (in major graticule divisions) of displayed modulation envelope. Record result.

12. To determine "percent modulation", apply result of Steps 10 and 11 to following equation:

$$\frac{Vp\text{-}p - Vv}{Vp\text{-}p + Vv} \times 100 = \%\ \text{Modulation}$$

4-9-5

TEST PROCEDURE: ***MEASURING TRANSMITTER DEVIATION (BELOW 20 kHz)***

TEST OBJECTIVE: N/A

SPECIAL ACCESSORY EQUIPMENT REQ'D:

1 BNC "Tee" Connector

2 Coax cables with BNC male connectors on one end and appropriate UUT connectors on opposite end

1 Short coax cable with BNC male connector on each end

1 DC blocking capacitor

TEST SET-UP DIAGRAM:

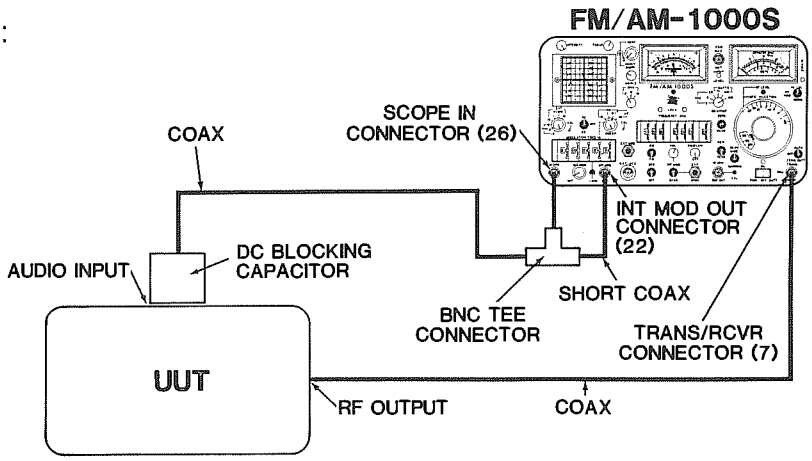

FIGURE 4-102 TEST SET-UP DIAGRAM FOR MEASURING TRANSMITTER DEVIATION

STEP	PROCEDURE
1.	Perform procedure 4-4-3, titled "GENERATING AUDIO TONES OF KNOWN AMPLITUDE", on page 4-47. Frequency of audio tone to be generated is 1 kHz; set MODULATION FREQ Hz Thumbwheels (25) 1000.0 Hz.

NOTE

- Amplitude of injected 1 kHz audio tone must be within limits of UUT input specifications.
- Tone injection point on UUT is "Audio Input" or "Microphone Jack."

2. Set FM/AM-1000S controls for FM receiver operation as shown in Figure 4-28, page 4-63.

STEP	PROCEDURE
3.	Place DEV/PWR Control (47) to "20 kHz" position.
4.	Key up UUT and proceed to Step 5.
5.	Observe reading of DEVIATION/WATTS Meter (1):

a. If reading on uppermost scale of meter is less than 6 kHz, rotate DEV/PWR Control (47) to "6 kHz" position and proceed to Step 5b. If reading is above 6 kHz, proceed directly to Step 5c.

b. If reading on middle scale is less than 2 kHz, rotate DEV/PWR Control (47) to "2 kHz" position and proceed to Step 5c. If reading is above 2 kHz, proceed directly to Step 5c.

c. Record reading of meter. Result represents peak FM deviation of UUT.

SECTION 5 - RECEIVER ALIGNMENT AND TROUBLESHOOTING

5-1 GENERAL

This section contains instructions for aligning and troubleshooting most typical AM/FM receivers, using the FM/AM-1000S. For ease of understanding the alignment/troubleshooting thought process, most of the information contained in this section is presented in the form of logical flowcharts. These flowcharts will enable operator to evaluate overall UUT performance and will provide a systematic means of localizing/correcting common receiver problems

NOTE

- The receiver alignment/troubleshooting procedures contained in this manual are provided primarily for the benefit of the novice technician.

The information contained in this section is divided into the following subsections:

Section	Title
5-2	ROUTINE MAINTENANCE CHECKLIST
5-3	AM/FM RECEIVER ALIGNMENT FLOWCHART
5-4	AM/FM RECEIVER TROUBLESHOOTING FLOWCHARTS
5-4-1	Power Supply Troubleshooting Flowchart
5-4-2	Oscillator Troubleshooting Flowchart
5-4-3	RF Amplifier Troubleshooting Flowchart
5-4-4	IF Amplifier Troubleshooting Flowchart
5-4-5	Receiver Section Troubleshooting Flowchart
5-4-6	Squelch Troubleshooting Flowchart
5-4-7	AGC Troubleshooting Flowchart
5-4-8	AM Audio Troubleshooting Flowchart
5-4-9	Sensitivty Troubleshooting Flowchart
5-4-10	Squelch Enable Troubleshooting Flowchart
5-4-11	FM Audio Troubleshooting Flowchart
5-4-12	Maximum Receivable Deviation Troubleshooting Flowchart

5-1-1 PRELIMINARY CONSIDERATIONS

1. For maximum benefit of all the alignment/troubleshooting procedures contained herein, it is strongly recommended that operator be familiar with the circuit under test so some idea is perceived as to voltage, frequency and waveform to be expected at each test point. This knowledge will aid operator in performing the alignment/troubleshooting procedures in a logical efficient manner, with a minimum of blind searching.

2. The flowcharts contained in this section are primarily intended to cover those receiver problems which occur continuously, as opposed to those occurring intermittantly or at random intervals. Intermittant problems are more difficult to troubleshoot because of the difficulty in making the malfunction occur on cue. With this type of problem, operator should strive to:

5-1-1 PRELIMINARY CONSIDERATIONS (CONT'D)

a. Determine conditions under which problem is most likely to occur.

b. Simulate those conditions so the problem can be corrected.

Examples of intermittant type problems are:

(1) Malfunctions related to temperature (e.g. UUT operates satisfactorily for a period when first energized; when UUT achieves warm-up, malfunction occurs).

(2) Malfunctions related to vibration (e.g. UUT operates satisfactorily in a test bench environment, but not under mobile conditions).

(3) Malfunctions related to control position, mode or range. (e.g. malfunction occurs only when a given UUT control is in a certain position).

3. As a prerequisite to performing the procedures contained in this section, it is recommended that operator obtain as much technical data as possible on UUT. (Data should include block diagrams, schematics, specifications and if available, maintenance procedures recommended by UUT manufacturer.) This information will be useful in providing location of test points, correct test point values, correct input/output specifications as well as details relative to overall UUT design.

5-1-2 ALIGNMENT/TROUBLESHOOTING SAFETY PRECAUTIONS

In addition to the general safety precautions listed under Section 2-1-1 of this manual, the operator must observe the following additional alignment/troubleshooting precautions:

1. When working with "live" circuits of high potential, keep one hand in pocket or behind back to avoid serious shock hazard.

2. Remove all jewelry or other cosmetic apparel before performing any test procedures involving "live" circuits.

3. Use only insulated troubleshooting tools when working with "live" circuits.

4. For added insulation, place rubber bench mat underneath all powered bench equipment, as well as a rubber floor mat underneath operator chair.

5. Heed all WARNINGS and CAUTIONS concerning maximum voltage and power inputs.

5-1-2 ALIGNMENT/TROUBLESHOOTING SAFETY PRECAUTIONS (CONT'D)

6. Avoid using oscilloscope/spectrum analyzer in direct sunlight as scope trace is difficult to see under these conditions.

7. Do not allow scope trace to become concentrated on CRT as a stationary spot, as CRT screen may be burned permanently. Reduce trace intensity if trace must remain stationary.

8. Protect FM/AM-1000S from vibration or mechanical shock. The CRT of the FM/AM-1000S is highly evacuated and if broken, will implode causing possible serious injury from fragmented glass.

5-1-3 HOW TO USE ALIGNMENT/TROUBLESHOOTING FLOWCHARTS

To begin the alignment/troubleshooting process, perform procedures below in sequence given:

1. ROUTINE MAINTENANCE CHECKLIST (Section 5-2)
   Requires visual inspection of UUT exterior and interior components.

2. RECEIVER ALIGNMENT FLOWCHART (Section 5-3)
   The alignment chart serves as initial starting point for determining overall UUT performance as follows:

   a. For instructions on how to perform certain alignment procedures using FM/AM-1000S, operator will be referred to appropriate test procedure in "SECTION 4, OPERATION" of this manual. On the alignment flowchart, those references will appear within the following symbol:

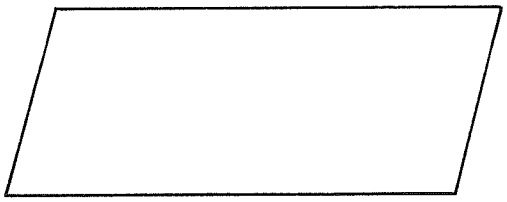

FIGURE 5-1 FLOWCHART SYMBOL REFERENCING AN OPERATING TEST PROCEDURE CONTAINED IN SECTION 4

   b. If during the course of alignment, certain UUT performance parameters do not meet expected norm, operator will be referred to troubleshooting flowcharts in "SECTION 5-4" of this manual. These flowcharts will provide general recommendations for troubleshooting various stages of the UUT.

5-1-3 HOW TO USE ALIGNMENT/TROUBLESHOOTING FLOWCHARTS (CONT'D)

b. (cont'd)
On the alignment chart, references to a given troubleshooting flowchart will appear within following symbol:

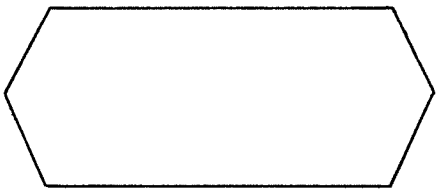

FIGURE 5-2 FLOWCHART SYMBOL REFERENCING A TROUBLESHOOTING FLOWCHART CONTAINED IN SECTION 5

c. Once a UUT performance problem has been located and corrected, operator is directed to a "RETURN" block (as shown below) at conclusion of troubleshooting flowchart. This block requires operator to return to "START" block of "RECEIVER ALIGNMENT FLOWCHART" and repeat all steps of the alignment procedure.

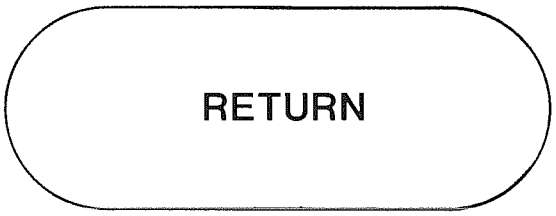

FIGURE 5-3 FLOWCHART SYMBOL DIRECTING OPERATOR TO RETURN TO "START" OF "RECEIVER ALIGNMENT FLOWCHART"

5-2 ROUTINE MAINTENANCE CHECKLIST

This section provides a checklist useful in determining the physical condition of a UUT through visual inspection. Defects resulting from wear, physical damage or deterioration can be detected using this checklist.

WARNING

- Power to UUT must be disconnected while completing entire checklist.

1. INSPECT UUT EXTERIOR FOR VISIBLE DAMAGE (Repair or replace damaged components as required):

   a. Check for scratches, dents, punctures, badly worn areas, broken covers or other evidence reflective of possible internal damage.

   b. Check for burned or scorched paint on UUT covers indicating possible UUT overheating.

   c. Check for clogged cooling vents or air filters.

   d. Check for evidence of corrosion.

2. INSPECT UUT CONTROLS AND INDICATORS FOR DEFECTIVE OR DAMAGED HARDWARE (Repair or replace damaged components as required):

   a. Check for loose control knobs.

   b. Check for cracked or broken bezels, lamps etc.

   c. Check for burned out indicator lamps.

   d. Check for defective control knob or switch detents.

3. INSPECT UUT CONNECTORS FOR VISIBLE DAMAGE (Repair or replace damaged components as required):

   a. Check for corroded contacts, pins etc.

   b. Check for loose, bent or broken pins.

   c. Check for damaged connector housings or insulation.

   d. Check for improperly soldered or broken connections.

5-2 ROUTINE MAINTENANCE CHECKLIST (CONT'D)

4. WITH UUT COVERS OFF, CLEAN INNER COMPONENTS OF UUT:

   Recommended cleaning supplies: Denatured alcohol, soft bristle brush, lint-free cloth and hand controlled dry air jet (30 psi maximum pressure).

   a. Remove dust and dirt from all electrical components. (Dust all components with bristle brush or dry air jet and where applicable, clean with lint-free cloth moistened with denatured alcohol.)

   CAUTION

   - Use air jet cautiously to avoid damaging fragile components.

   b. Clean all accessible switch and relay contacts.

   c. Use denatured alcohol to clean any corroded areas.

   d. Inspect for any leaky components. Replace as necessary.

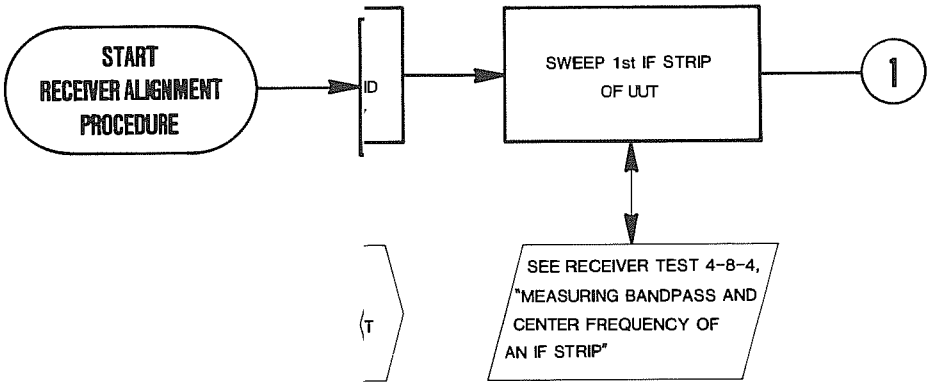

5-3
RECEIVER ALIGNMENT FLOWCHART

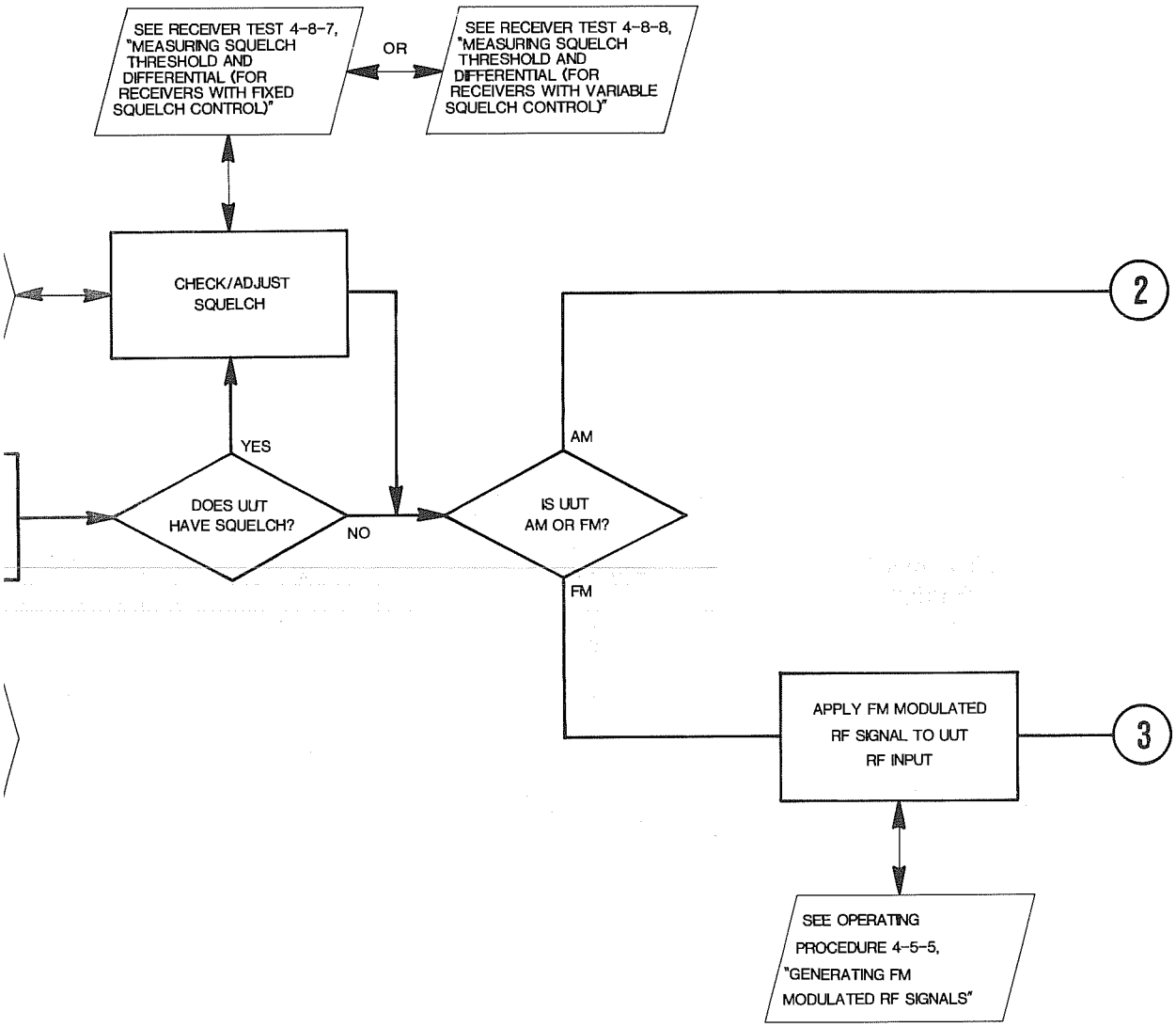

5-3
RECEIVER ALIGNMENT FLOWCHART

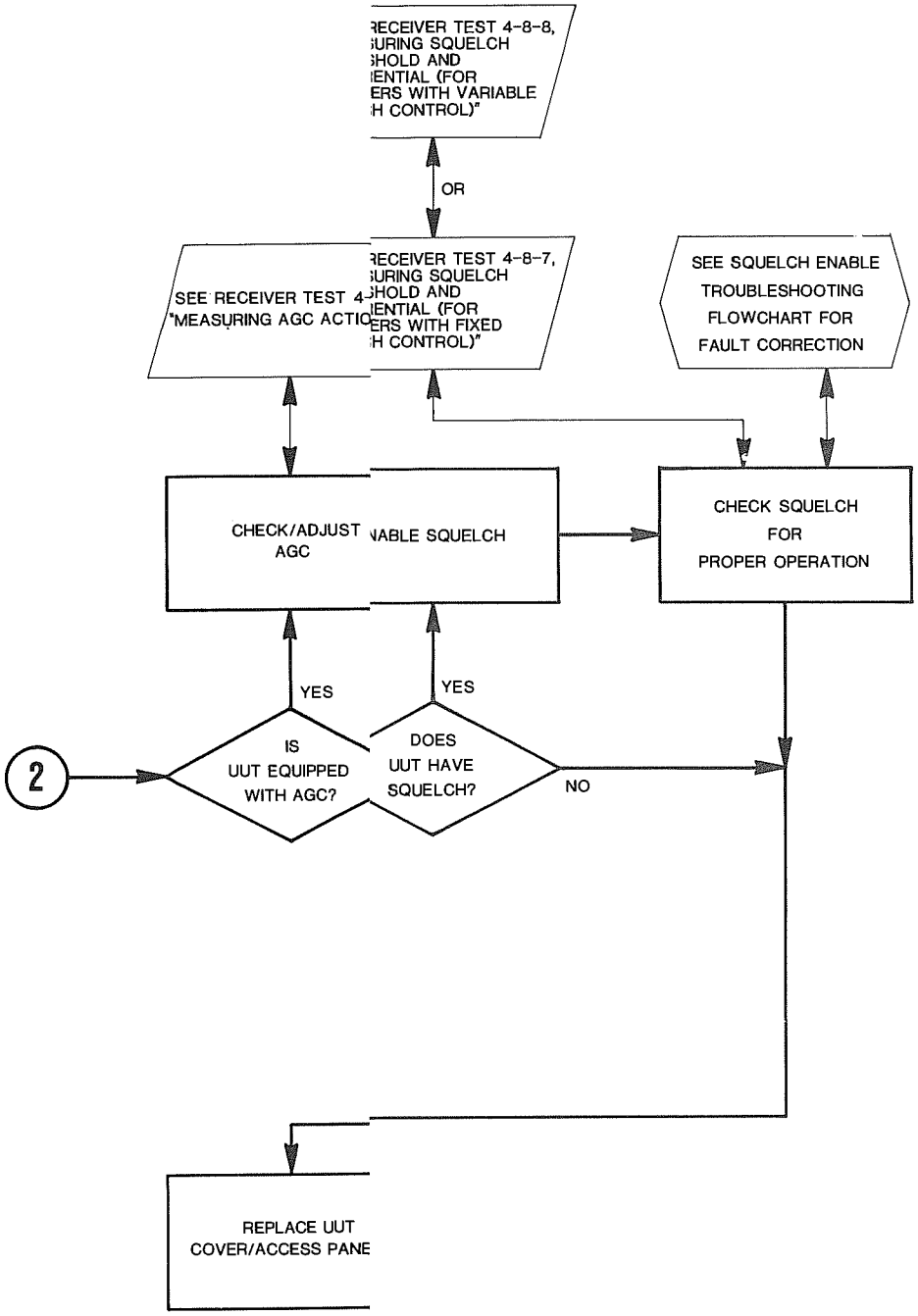

5-

RECEIVE

ALIGNMEN

FLOWCHAR

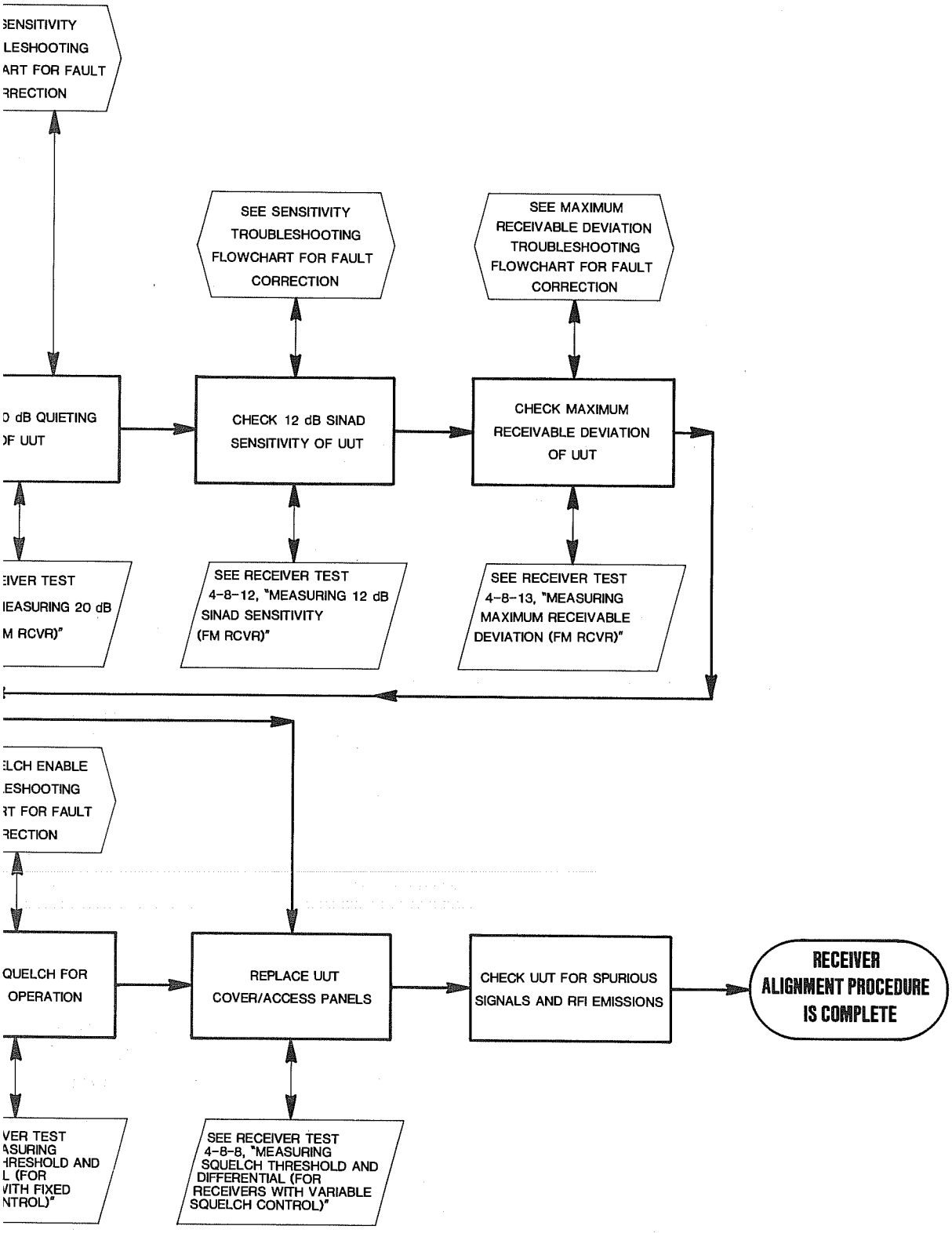

5-3
RECEIVER ALIGNMENT FLOWCHART

5-4 AM/FM RECEIVER TROUBLESHOOTING FLOWCHARTS

5-4-1 POWER SUPPLY TROUBLESHOOTING FLOWCHART

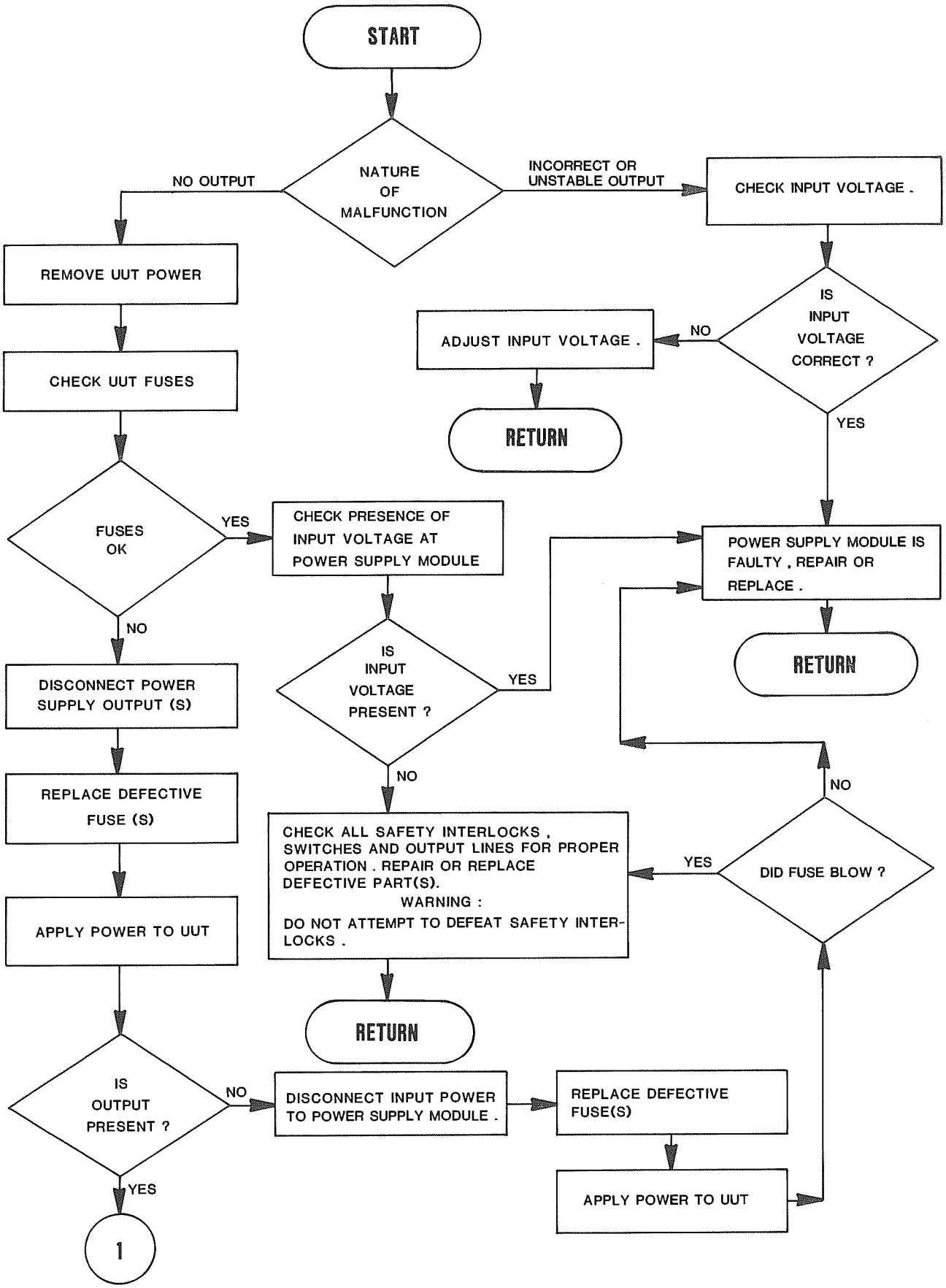

5-4-1 POWER SUPPLY TROUBLESHOOTING FLOWCHART

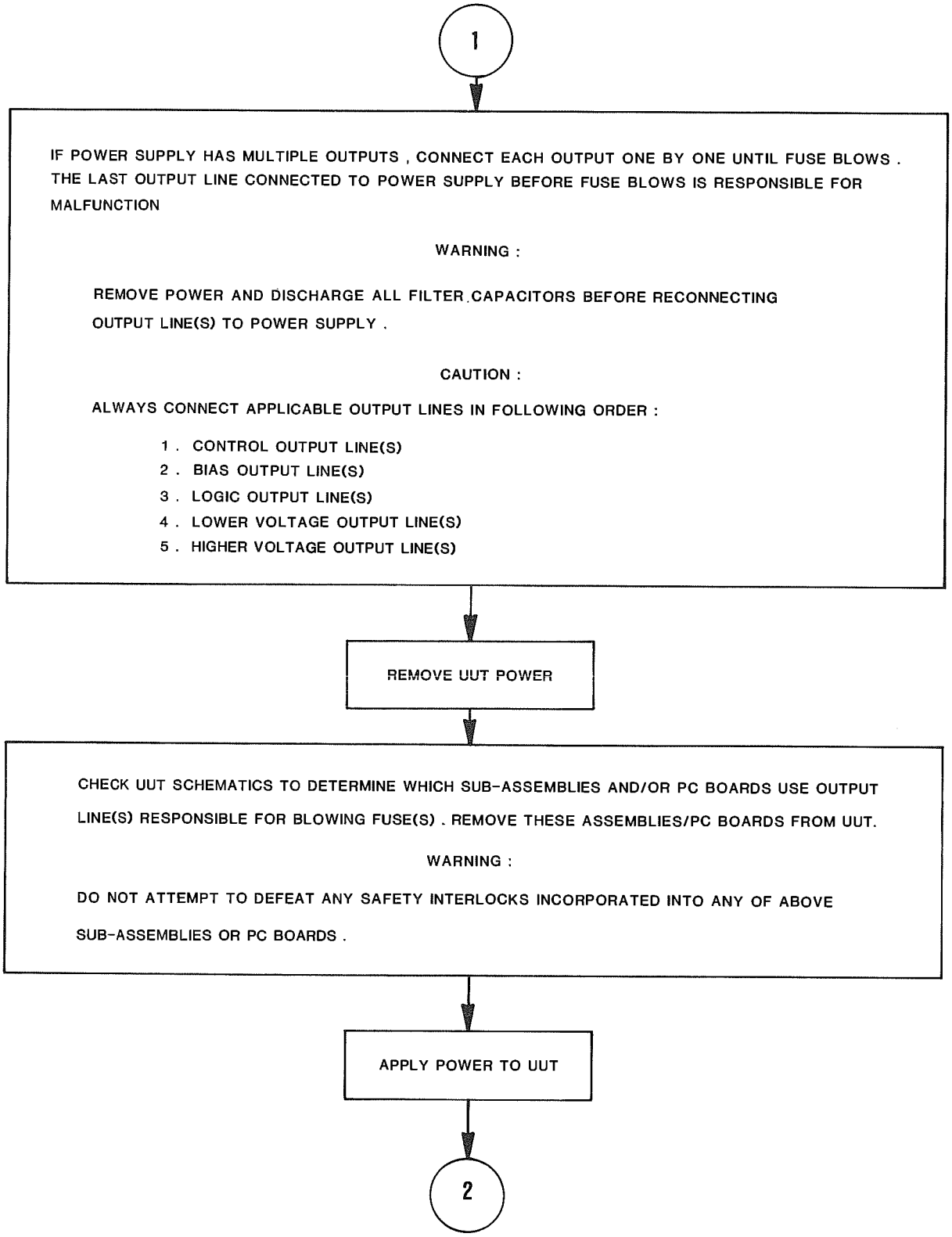

5-4-1 POWER SUPPLY TROUBLESHOOTING FLOWCHART

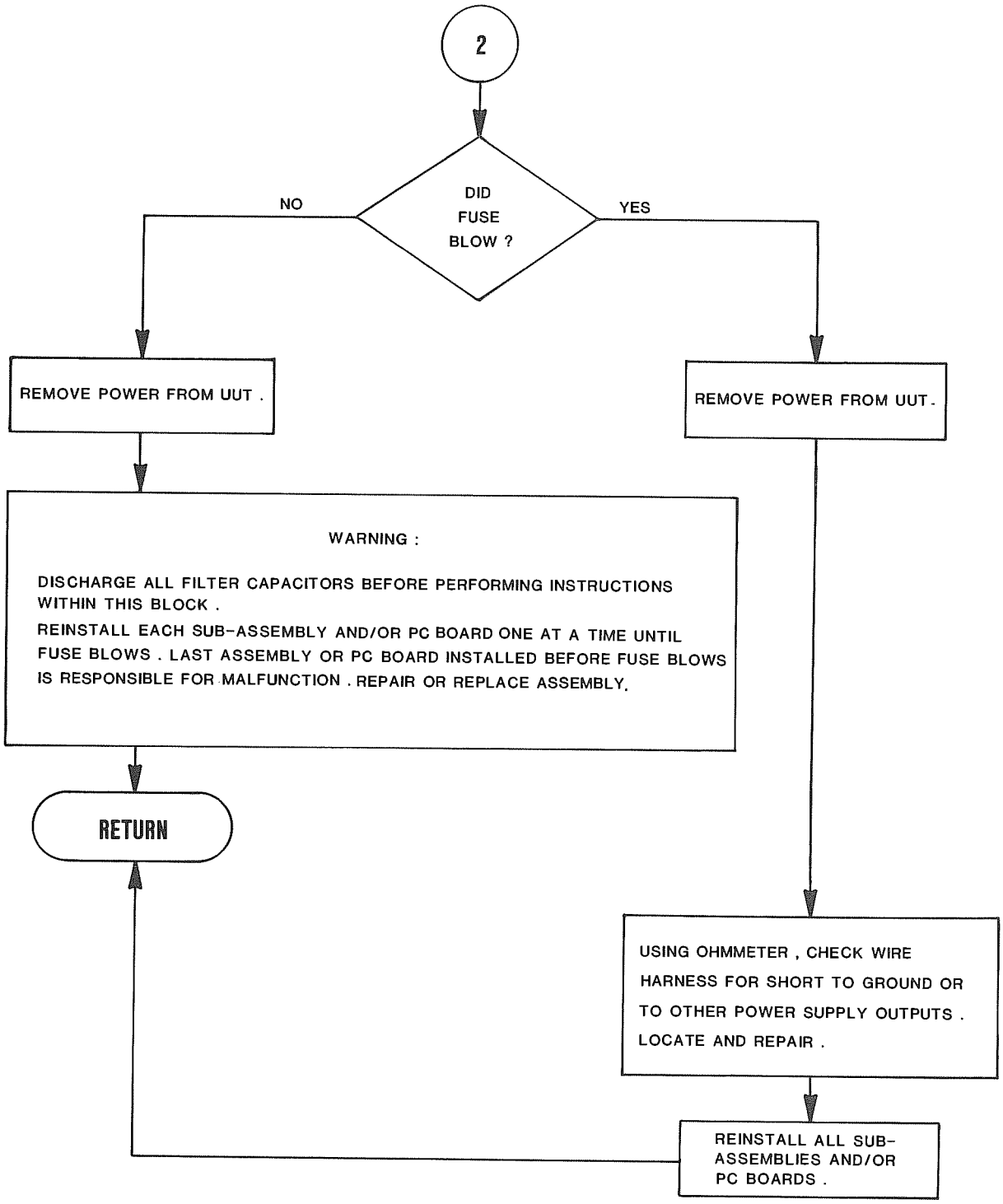

5-4-2 OSCILLATOR TROUBLESHOOTING FLOWCHART
(REFERENCE TEST PROCEDURE 4-8-2 IN SECTION 4)

NOTE :

OSCILLATOR UNDER TEST MUST BE PHYSICALLY LOCATED ON UUT AND IDENTIFIED ON UUT SCHEMATIC BEFORE PERFORMING TROUBLESHOOTING STEPS BELOW .

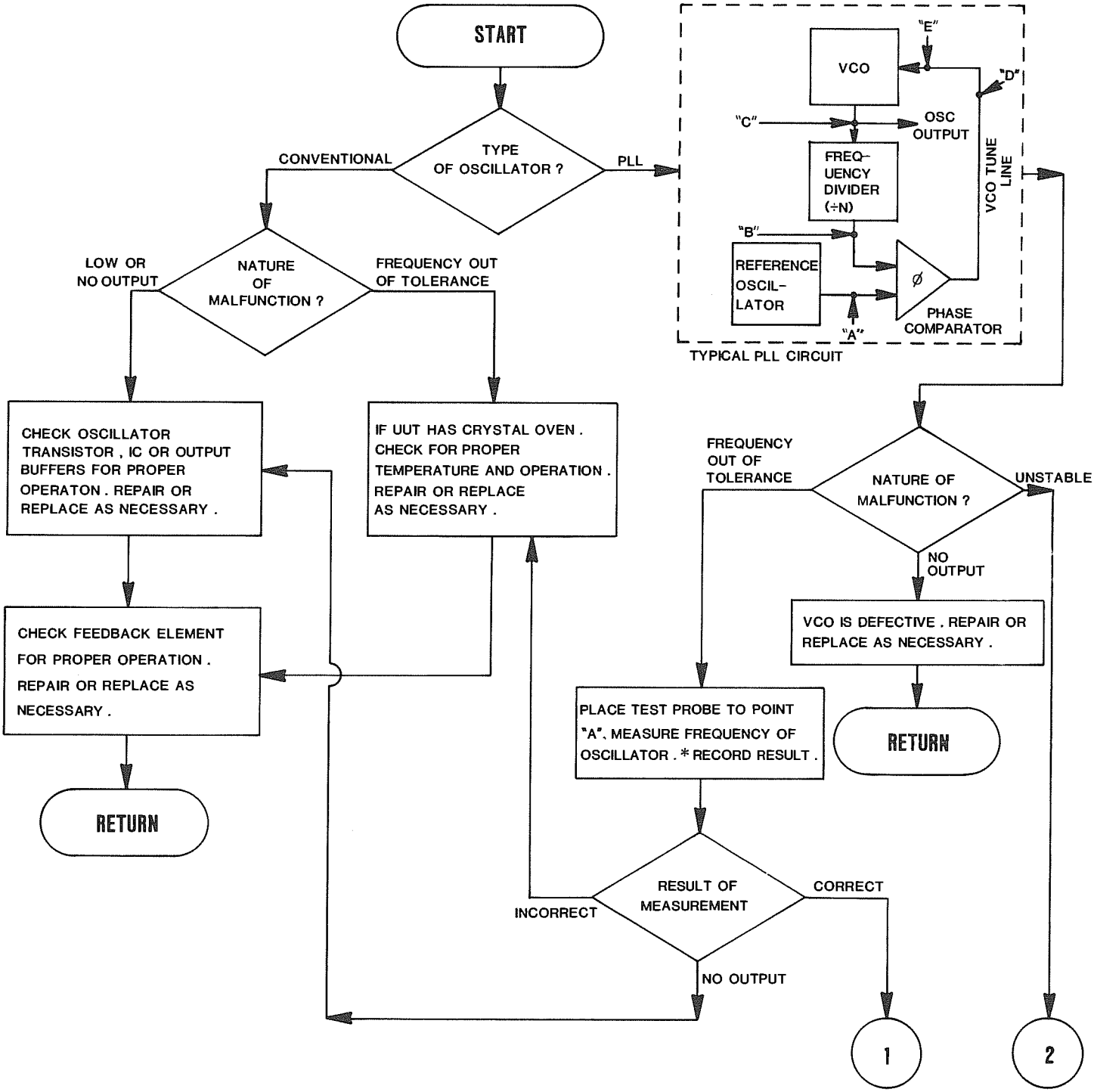

* CHECK UUT SCHEMATIC FOR OSCILLATOR FREQUENCY RANGE . IF BELOW 50 kHz , MEASURE FREQUENCY USING OPERATING PROCEDURE 4-2-7 "MEASURING FREQUENCIES BETWEEN 5 Hz AND 500 KHz" (STEPS 12 THRU 17) . IF ABOVE 50 KHz , MEASURE FREQUENCY USING FREQUENCY COUNTER .

5-4-2 OSCILLATOR TROUBLESHOOTING FLOWCHART

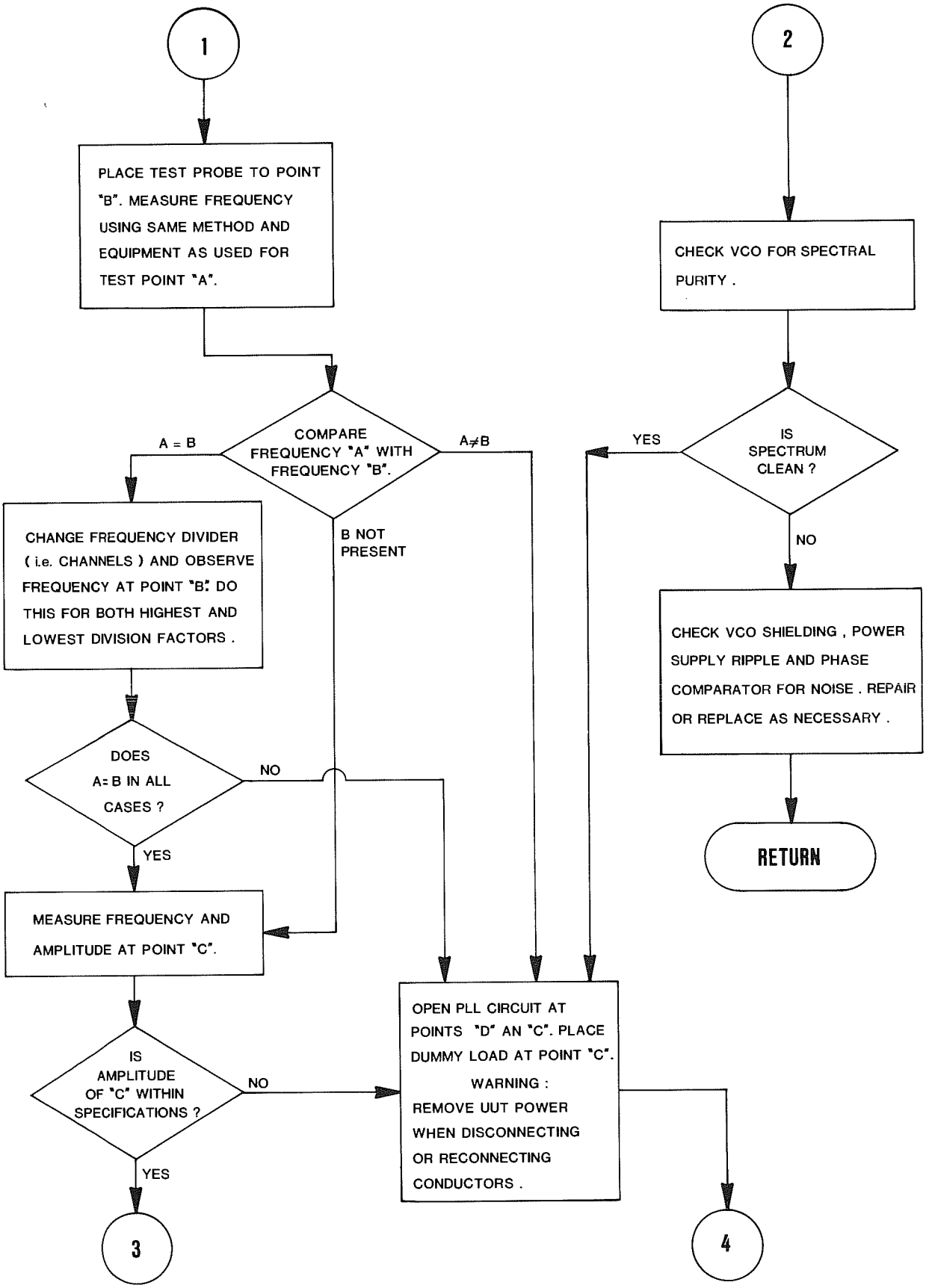

5-4-2 OSCILLATOR TROUBLESHOOTING FLOWCHART

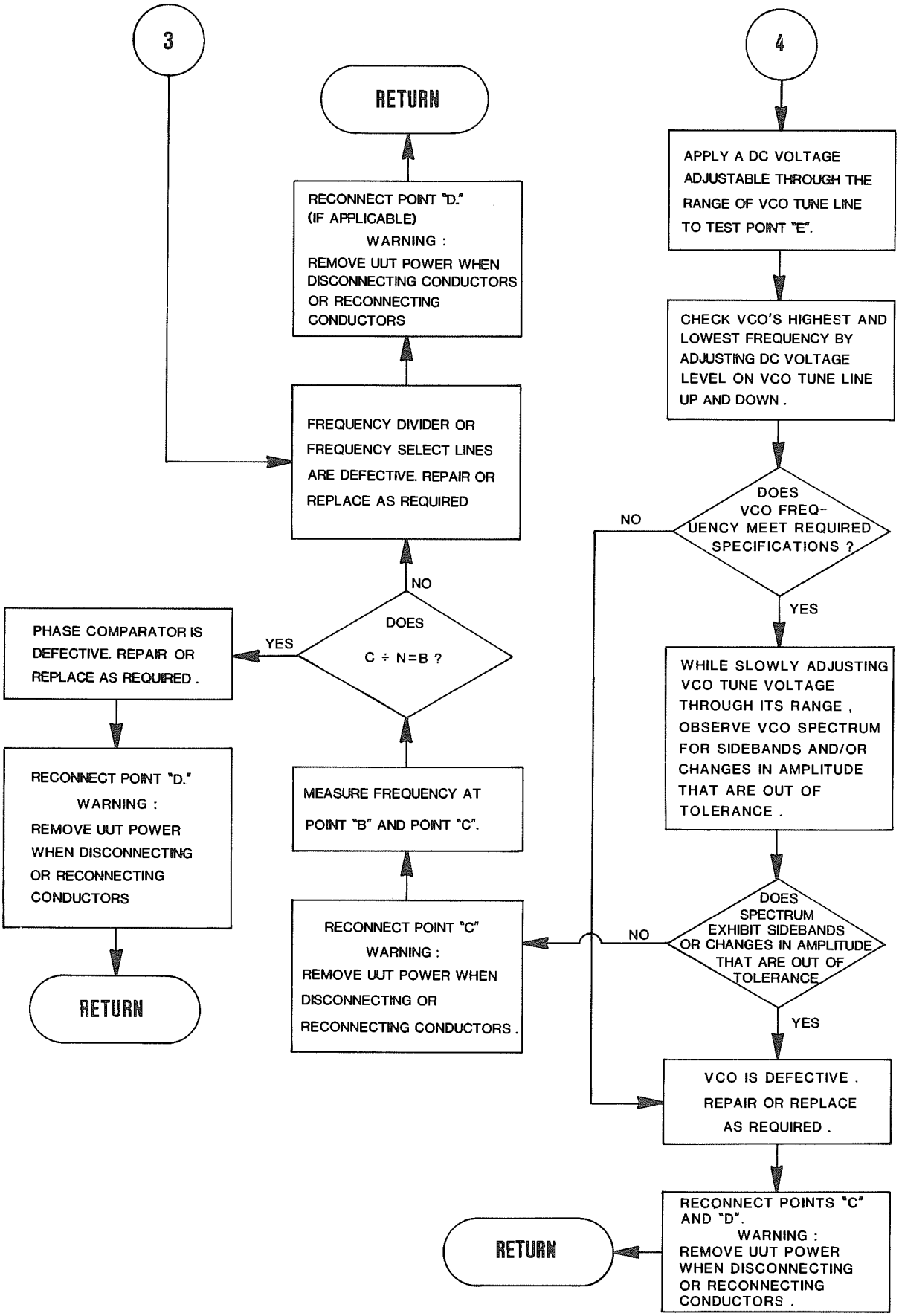

5-4-3 RF AMPLIER TROUBLESHOOTING FLOWCHART
(REFERENCE TEST PROCEDURE 4-8-3 IN SECTION 4)

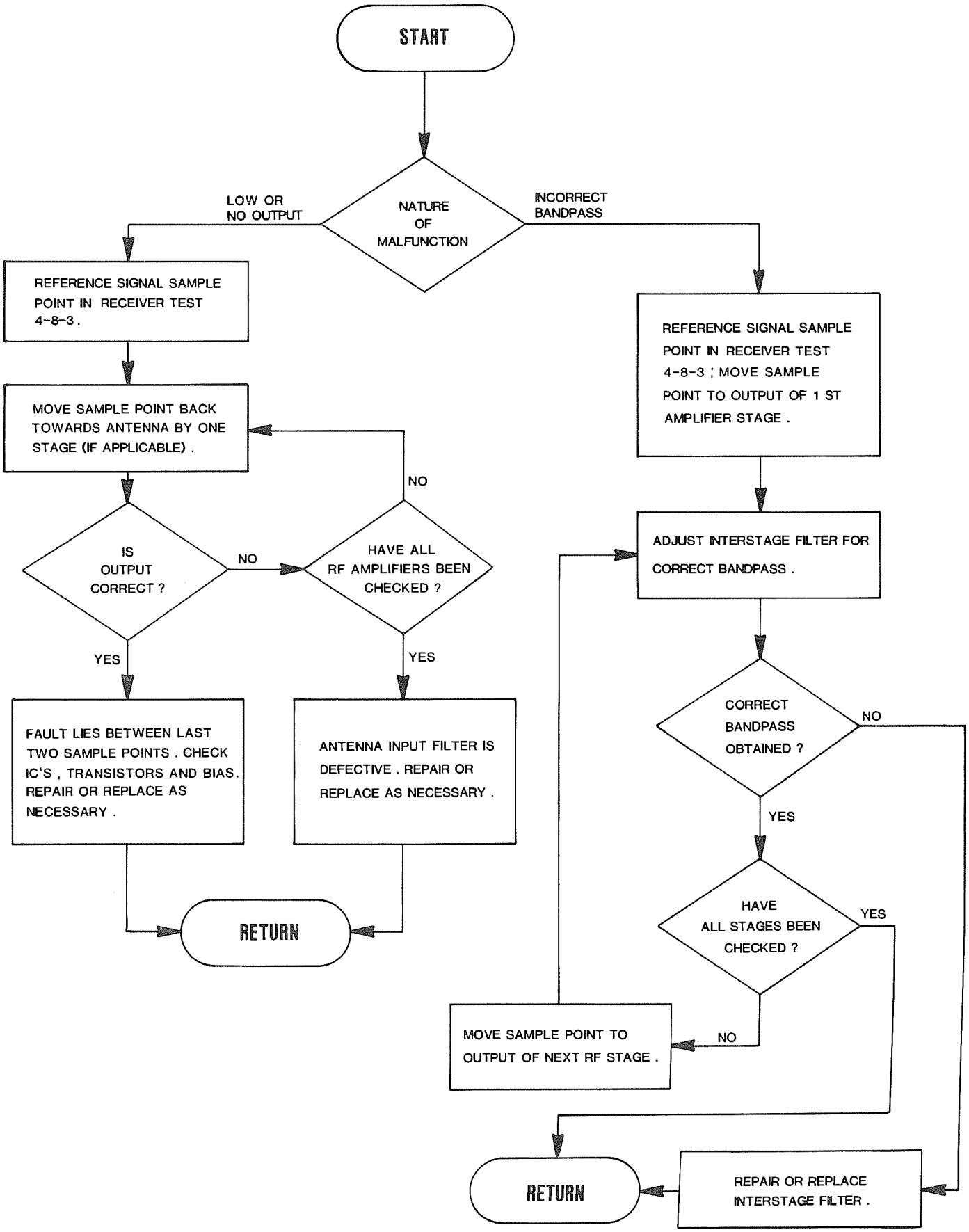

5-4-4 IF AMPLIFIER TROUBLE SHOOTING FLOWCHART
(REFERENCE TEST PROCEDURE 4-8-4 IN SECTION 4)

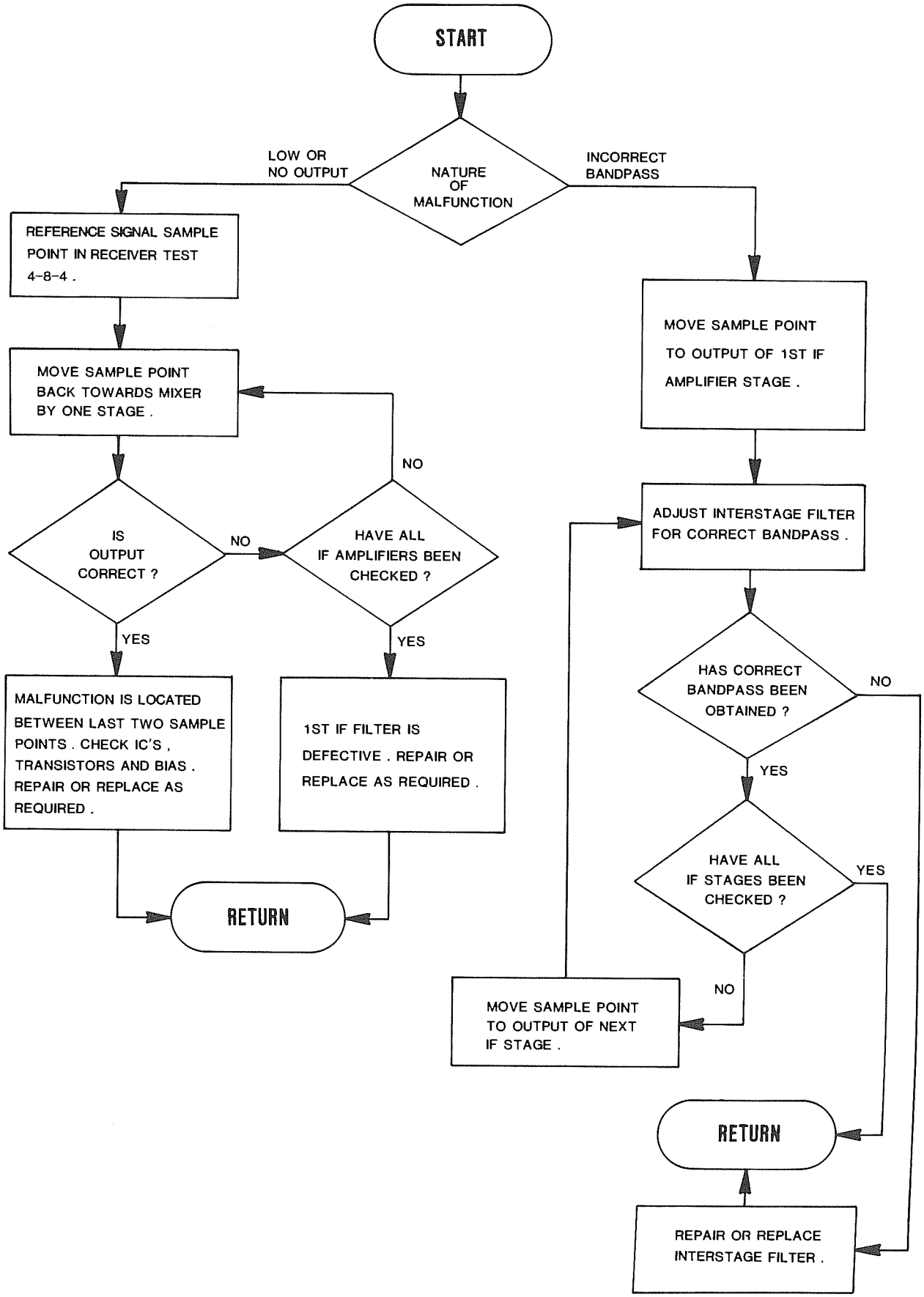

5-4-5 RECEIVER SECTION TROUBLESHOOTING FLOWCHART
(REFERENCE TEST PROCEDURE 4-8-5 IN SECTION 4)

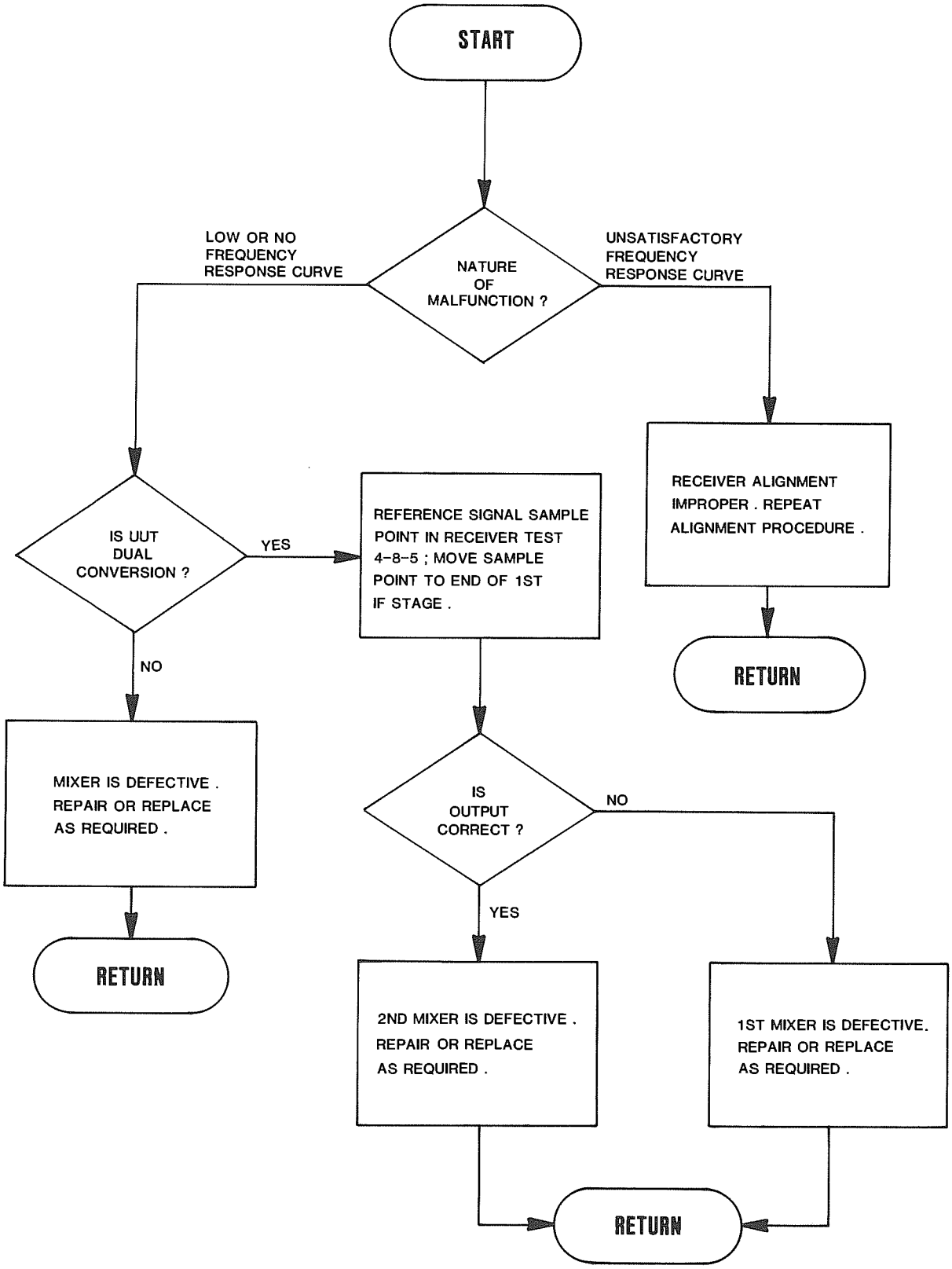

5-4-6 SQUELCH TROUBLESHOOTING FLOWCHART
(REFERENCE TEST PROCEDURES 4-8-7 OR 4-8-8 IN SECTION 4

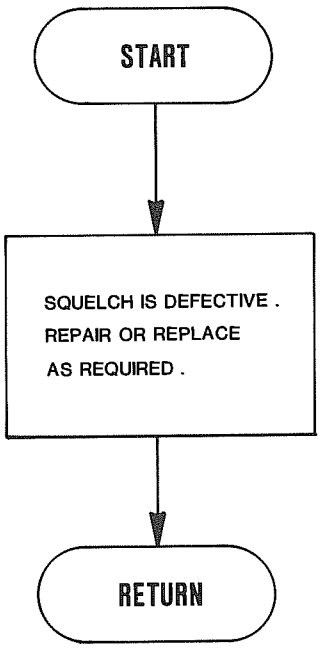

5-4-7 AGC TROUBLESHOOTING FLOWCHART
(REFERENCE TEST PROCEDURE 4-8-9 IN SECTION 4)

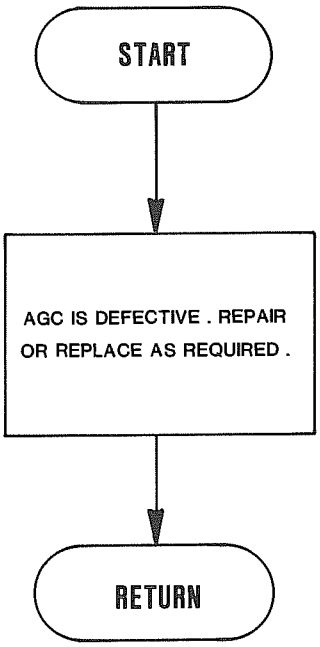

5-4-8 AM AUDIO TROUBLESHOOTING FLOWCHART

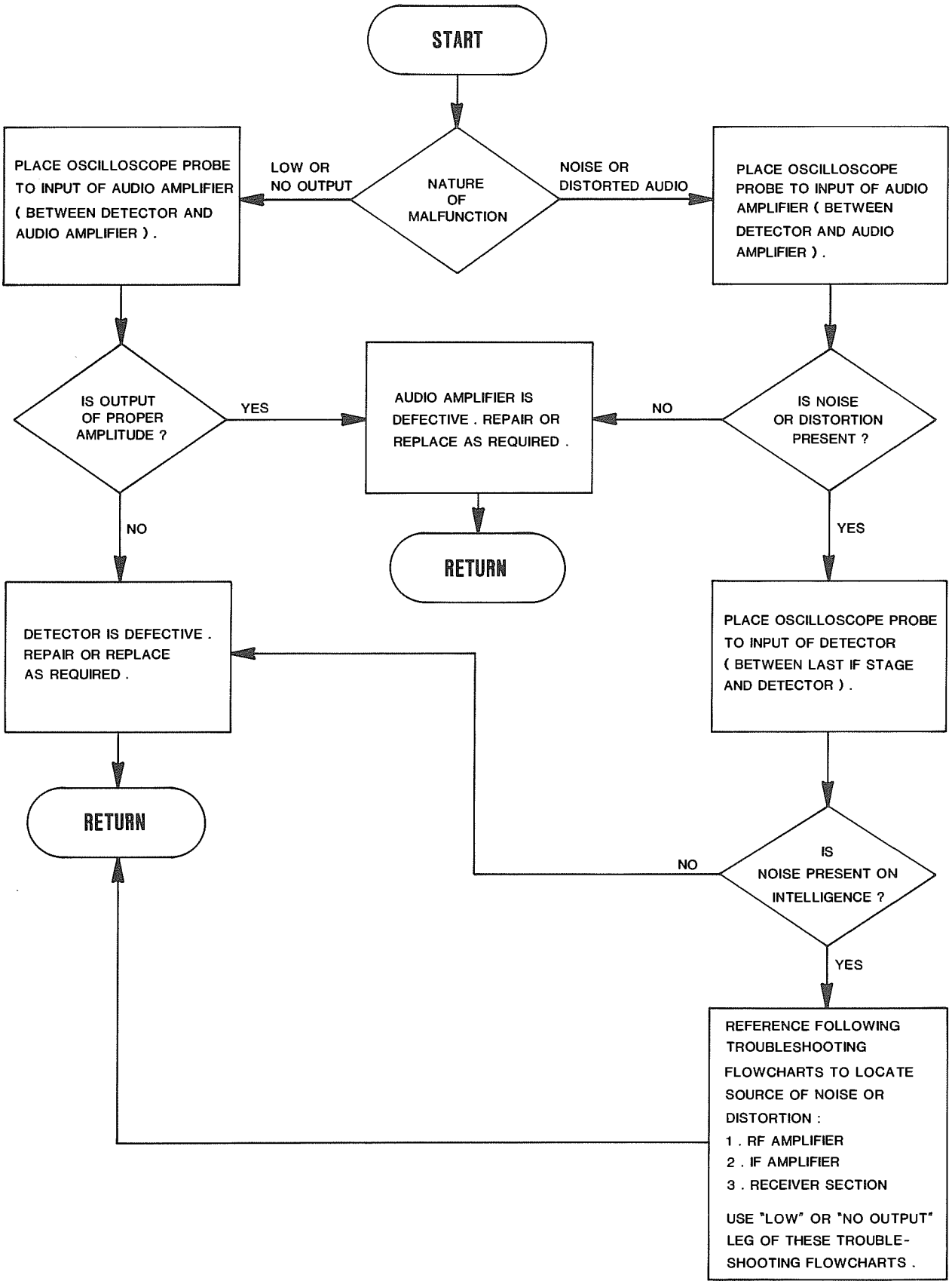

5-4-9 SENSITIVITY TROUBLESHOOTING FLOWCHART
(REFERENCE TEST PROCEDURES 4-8-10, 4-8-11 OR 4-8-12 IN SECTION 4)

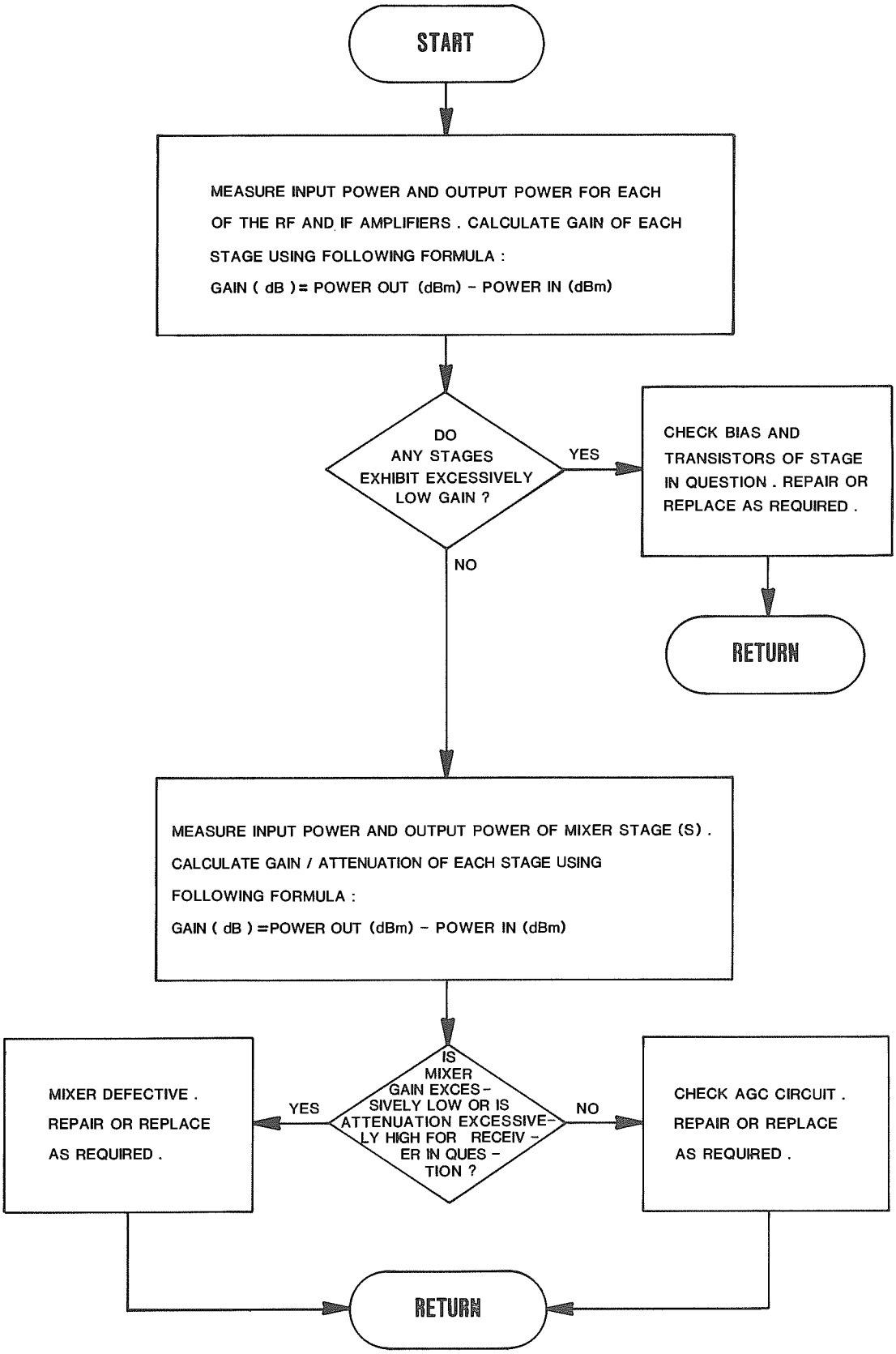

5-4-10 SQUELCH ENABLE TROUBLESHOOTING FLOWCHART
(REFERENCE TEST PROCEDURE 4-8-7 OR 4-8-8 IN SECTION 4)

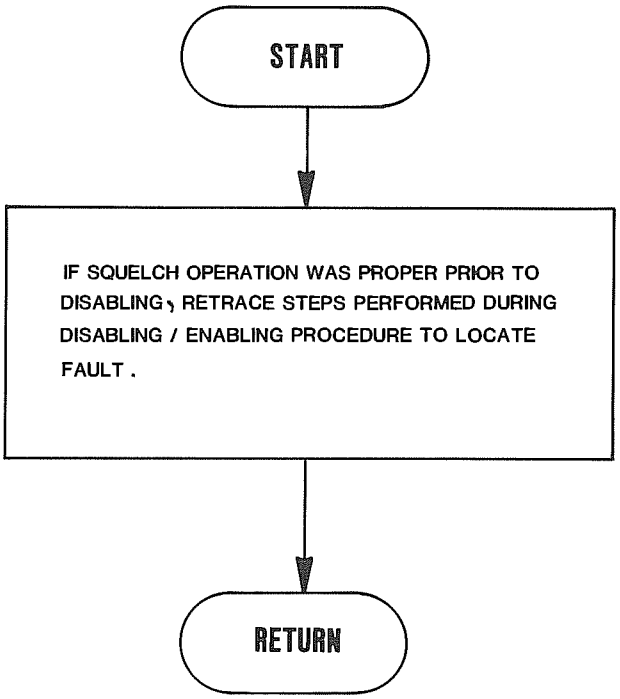

5-4-11 FM AUDIO TROUBLESHOOTING FLOWCHART

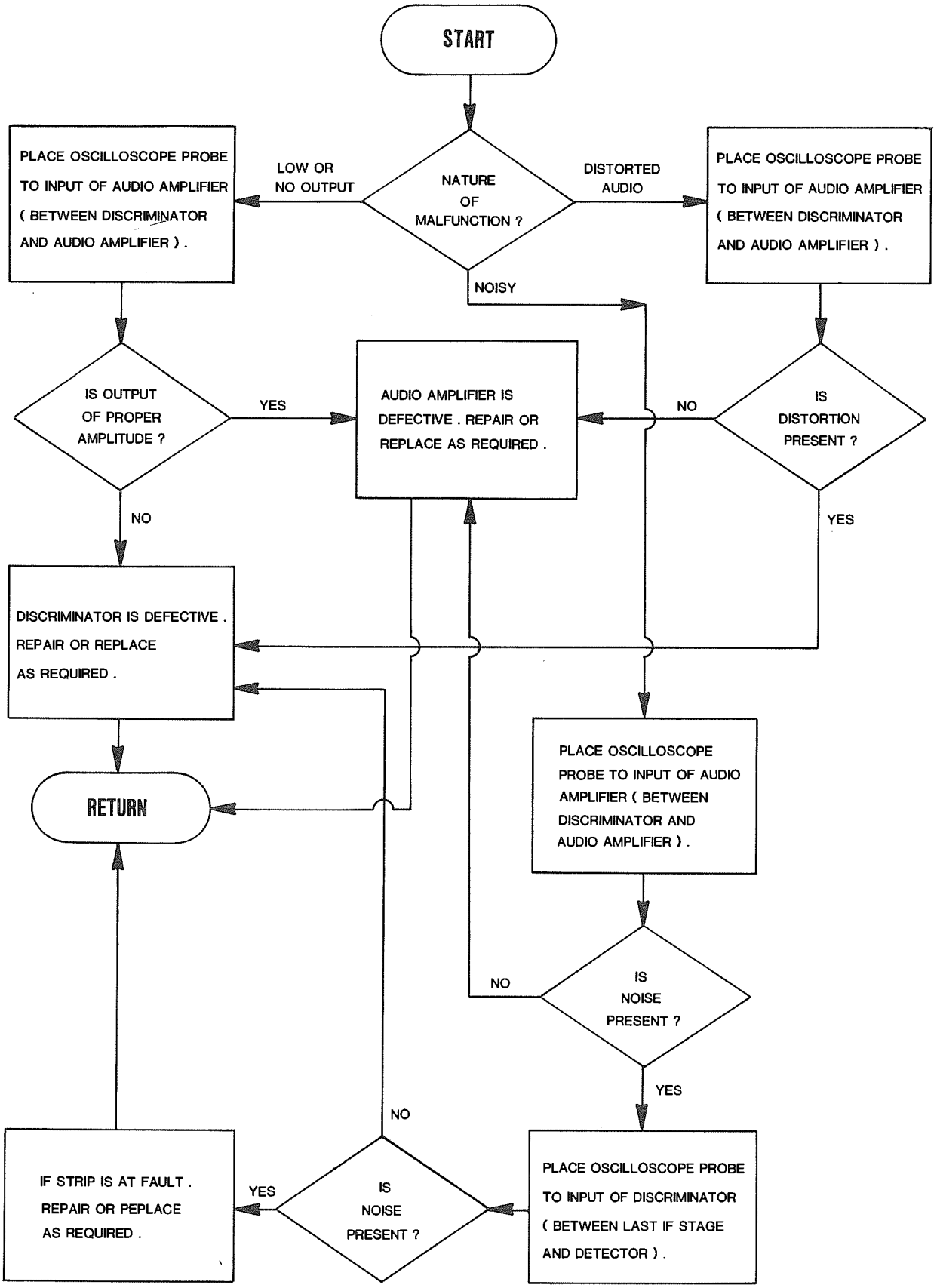

5-4-12 MAXIMUM RECEIVABLE DEVIATION TROUBLESHOOTING FLOWCHART (REFERENCE TEST PROCEDURE 4-8-13 IN SECTION 4)

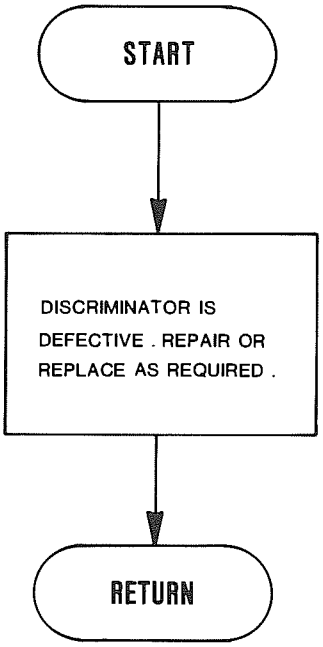

APPENDICES

APPENDIX A: SPECIFICATIONS FM/AM-1000S (EFF: S/N 1616 & ON)

RF SIGNAL GENERATOR

FREQUENCY RANGE:	100 Hz to 999.9999 MHz in 100 Hz increments
FREQUENCY ACCURACY:	5×10^{-7} (±0.00005%) 2×10^{-7} (typically) (See specification on TCXO MASTER OSCILLATOR)
FM QUIETING:	42 dB below 3.3 kHz deviation at 1 kHz rate, as measured in a 0.3 to 3 kHz post detection bandwidth
RESIDUAL FM:	Less than 100 Hz
RF OUTPUT POWER*:	-130 dBm to -33 dBm (100 Hz to 1 GHz), -130 dBm to 0 dBm (20 kHz to 1 GHz); continuously variable into 50Ω
RANGES:	"Normal" "μV x 100" and "HIGH LEVEL" (0 dBm)
ACCURACY*:	-110 to -35 dBm ±2.5 dB up to 400 MHz, ±3.0 dB above 400 MHz
"HI LEVEL" POWER RANGE INDICATOR ACCURACY:	0 dBm; ±2.5 dB (20 kHz to 600 MHz), ±4.0 dB (600 MHz to 999.9999 MHz) Dial indicator accuracy (dBm scale) is maintained relative to 0 dBm indication
INTERNAL MODULATION AM:	10 Hz to 5 kHz (0 to 90%)
FM:	10 Hz to 9999.9 Hz rate (0 to ±15 kHz deviation)
EXTERNAL MODULATION AM:	3.0 V (±1 V) peak-to-peak produces 90% modulation
FM:	6.0 V (±2 V) peak-to-peak produces 15 kHz deviation (maximum modulating frequency = 15 kHz)

* These specifications may not be complied with at certain frequencies, as a result of the internal design of the unit.

APPENDIX A (CONT'D)

OSCILLOSCOPE

DISPLAY SIZE:	5 x 5 cm
VERTICAL BANDWIDTH:	DC to 1 MHz (at 3 dB bandwidth)
EXTERNAL VERTICAL INPUT RANGES:	10 mV, 100 mV, 1 V, 10 V per division
HORIZONTAL SWEEP RATE:	10 mSec, 1 mSec, 100 µSec, 10 µSec per division

SPECTRUM ANALYZER

DYNAMIC RANGE:	70 dB (-30 dBm to -100 dBm)
DISPERSION:	Continuous from ±0.5 MHz to ±5 MHz from center frequency (1 to 10 MHz span)
BANDWIDTH RESOLUTION:	30 kHz

AUDIO GENERATOR

OPERATING MODE Internal:	Variable frequency generator or 1 kHz tone, or both simultaneously
External and Internal*:	Any external tone(s) plus either or both internal tones simultaneously
FREQUENCY RANGE Variable Tone:	10.0 Hz to 9999.9 Hz
Fixed Tone:	1 kHz
ACCURACY Fixed Tone:	±20 Hz
Variable Tone:	0.01%
Resolution:	0.1 Hz
OUTPUT LEVEL:	0 to 2.5 V RMS minimum for either tone into 150Ω

* RF Generator may be modulated simultaneously from internal and external sources, and internal variable frequency generator may be externally keyed for sequential tone coding.

AUDIO GENERATOR (cont'd)

DISTORTION 10 Hz to 100 Hz:	2% maximum
100 Hz to 9999.9 Hz:	0.7% maximum
Fixed Tone:	2% maximum

RECEIVER/MONITOR

FREQUENCY RANGE:	300 kHz to 999.9999 MHz
RESOLUTION:	100 Hz
10 dB SINAD SENSITIVITY:	2 μV (typical)
SELECTIVITY AT 3 dB POINT Narrow:	Receiver 15 kHz; detector audio bandwidth is 8 kHz
Mid:	Receiver 150 kHz; detector audio bandwidth is 8 kHz
Wide:	Receiver 150 kHz; detector audio bandwidth is 80 kHz
Quieting:	Deviation measurements can be made down to 0.1 kHz
ADJACENT CHANNEL REJECTION:	Greater than 25 dB at ±25 kHz (typically) Greater than 40 dB at ±50 kHz (typically)
BEAT FREQUENCY OSCILLATOR (BFO):	Variable injection level
BEAT FREQUENCY OSCILLATOR ACCURACY:	±3 dB, from 2 μV to 5000 μV. BFO is phaselocked to master oscillator
DEMODULATION OUTPUT LEVEL AM:	100% = 0.47 V peak-to-peak nominal
FM:	±10 kHz = 0.65 V peak-to-peak nominal
RECEIVER ANTENNA INPUT PROTECTION:	0.25 watts maximum level without damage

APPENDIX A (CONT'D)

POWER MONTIOR

FREQUENCY RANGE:	1 MHz to 1000.00 MHz
POWER RANGES:	0 to 10 and 0 to 100 watts
ACCURACY 1 to 600 MHz:	±7% of reading plus 3% of full scale
600 to 1000.00 MHz:	±20% of reading plus 3% of full scale
INPUT POWER:	20 watts continuous; 100 watts for 10 seconds
AUTOMATIC MODE SWITCHING:	Automatic changeover from generate to monitor mode at 100 mW (typical) input to TRANS/RCVR Connector

TCXO MASTER OSCILLATOR

ACCURACY:	5×10^{-7} (±0.00005%), 2×10^{-7} (typically) Greater accuracy is attainable with front panel adjustment to WWV.
AGING STABILITY:	2 to 3 PPM during first year; 1 PPM per year thereafter

FREQUENCY ERROR METER MEASUREMENT CAPABILITY

METER SENSITIVITY:	Typically 1.5 μV above 1 MHz (sensitivity is reduced below 1 MHz)
RANGES:	±1.5 kHz, ±5 kHz, ±15 kHz (full scale)
RESOLUTION:	50 Hz (calibration marks at 100 Hz on ±1.5 kHz range)
ZEROING:	Frequency error meter is automatically zeroed every 1.5 seconds during a 3 mSec time period. Auto zeroing may be disabled with AUTO-ZERO/BATT switch.

TONE FREQUENCY MONITORING

MEASUREMENT TECHNIQUES:	Internal tone is selectable with the oscilloscope SWEEP CONTROL to produce a Lissajou oscilloscope pattern from a received signal.

GENERAL

DIMENSIONS:	12.5" Wide, 8" High, 19.5" Deep (31.8 cm W, 20.3 cm H, 49.5 cm D)
WEIGHT:	43 lbs. (19.5 kg)
OPERATING TEMPERATURE RANGE:	32° F to 122° F (0° to 50° C)
POWER REQUIREMENTS:	115/230 V AC 50 to 400 Hz 11 to 28 V DC
TYPICAL DC CURRENTS:	4.3 A at 12 V and 1.85 A at 28 V (With Oscilloscope/Receiver "ON" and Dual Tone Generator/Spectrum Analyzer "OFF".)
TYPICAL POWER CONSUMPTION:	80 W
INTERNAL BATTERY:	12 V DC 5.0 amp-hr

NOTE

- Maximum ON time for measurement of transmitter output using the TRANS/RCVR Connector (7) is:

  10 sec at 100 W, 15% duty cycle
  20 sec at 50 W, 30% duty cycle
  2 min at 30 W, 50% duty cycle

- Specifications and features subject to change without notice.

APPENDIX B: FM/AM-1000S STANDARD/OPTIONAL ACCESSORIES

B-1 STANDARD ACCESSORY LIST

Qty.	Description/Function	Model No.	IFR Part No.
1	Allen Wrench, .05" For use in loosening/tightening FM/AM-1000S control knobs.	N/A	1025-0000-107
1	Antenna For attachment to ANT INPUT Connector (44) when monitoring "off-the-air" signals.	N/A	1201-7616-500
1	AC Power Cord For use in powering FM/AM-1000S from standard AC power sources.	N/A	6041-2326-602
1	DC Power Cord (w/cigar lighter adaptor) For use in powering FM/AM-1000S from 12 volt DC power sources.	N/A	6041-2326-601
1	90° Angle BNC Connector (Male to Female) For use in pointing antenna skyward when FM/AM-1000S is set into a horizontal operating position.	N/A	2113-0000-013
1	Fuse, 1¼ Ampere, SLO BLO Replacement fuse for FM/AM-1000S AC line fuse.	N/A	5106-0000-005
2	Fuse, 7½ Ampere Replacement fuses for FM/AM-1000S battery or external DC fuses.	N/A	5106-0000-009

B-2 OPTIONAL ACCESSORY LIST

Qty.	Description/Function	Model No.	IFR Part No.
1	Canvas Cover/Carrying Case FM/AM-1000S protective carrying case with three built-in compartments for accessories.	CS-114	1412-2380-700

B-2 OPTIONAL ACCESSORY LIST (cont'd)

Qty.	Description/Function	Model No.	IFR Part No.
1	MM-100 Multimeter w/PB-114 Probe Self contained 8 function multimeter incorporated into FM/AM-1000S lid; includes "x 1" and "x 10" test probe (600 V RMS, 800 VDC)	MM-100	9001-2381-600
1	Fuse, 1/32 Ampere Replacement fuse for MM-100 Multimeter ohms circuit	N/A	5106-4500-031
1	10 dB BNC Attenuator, 1 Watt	AT-10	2901-0401-010
1	20 dB BNC Attenuator, 1 Watt	AT-20	2901-0401-020
1	30 dB BNC Attenuator, 2 Watt	AT-30	2901-0402-030
1	10 dB BNC Type N Attenuator, 150 Watt	AT-4010	2901-0680-010
1	10 dB BNC Type N Attenuator, 150 Watt, w/coax cable assy.	AT-4010A	7005-2381-100
1	Coax Assembly, Flexible, 150 Watt For use in connecting AT-4010 150 Watt Attenuator to FM/AM-1000S.	CA-114	6053-0450-600
1	Antenna (Telescopic)	ANT-2	1201-0909-900

APPENDIX C: dBm TO MICROVOLT CONVERSION CHART

dBm	μV	dBm	μV	dBm	μV
0	224,000	-47	1,000	-94	4.47
-1	200,000	-48	891	-95	3.99
-2	178,000	-49	795	-96	3.55
-3	159,000	-50	709	-97	3.17
-4	141,000	-51	633	-98	2.82
-5	126,000	-52	563	-99	2.52
-6	112,000	-53	501	-100	2.24
-7	100,000	-54	447	-101	2.00
-8	89,100	-55	399	-102	1.78
-9	79,500	-56	355	-103	1.59
-10	70,900	-57	317	-104	1.41
-11	63,300	-58	282	-105	1.26
-12	56,300	-59	252	-106	1.12
-13	50,100	-60	224	-107	1.00
-14	44,700	-61	200	-108	0.891
-15	39,900	-62	178	-109	0.795
-16	35,500	-63	159	-110	0.709
-17	31,700	-64	141	-111	0.633
-18	28,200	-65	126	-112	0.563
-19	25,200	-66	112	-113	0.501
-20	22,400	-67	100	-114	0.447
-21	20,000	-68	89.1	-115	0.399
-22	17,800	-69	79.5	-116	0.355
-23	15,900	-70	70.9	-117	0.317
-24	14,100	-71	63.3	-118	0.282
-25	12,600	-72	56.3	-119	0.252
-26	11,200	-73	50.1	-120	0.224
-27	10,000	-74	44.7	-121	0.200
-28	8,900	-75	39.9	-122	0.178
-29	7,950	-76	35.5	-123	0.159
-30	7,090	-77	31.7	-124	0.141
-31	6,330	-78	28.2	-125	0.126
-32	5,630	-79	25.2	-126	0.112
-33	5,010	-80	22.4	-127	0.100
-34	4,470	-81	20.0	-128	0.0891
-35	3,990	-82	17.8	-129	0.0795
-36	3,550	-83	15.9	-130	0.0709
-37	3,170	-84	14.1	-131	0.0633
-38	2,820	-85	12.6	-132	0.0563
-39	2,520	-86	11.2	-133	0.0501
-40	2,240	-87	10.0	-134	0.0447
-41	2,000	-88	8.91	-135	0.0399
-42	1,780	-89	7.95	-136	0.0355
-43	1,590	-90	7.09	-137	0.0317
-44	1,410	-91	6.33	-138	0.0282
-45	1,260	-92	5.63	-139	0.0252
-46	1,120	-93	5.01	-140	0.0224

APPENDIX D: REPACKING FOR SHIPMENT

D-1 SHIPPING INFORMATION

IFR test sets returned to factory for calibration, service or repair must be repackaged and shipped subject to the following conditions:

- Do not return any products to factory without first receiving authorization from IFR Customer Service Department.

  CONTACT:

  Customer Service Dept.
  IFR, Inc.
  10200 West York Street
  Wichita, Kansas 67215

  Telephone: (800)-835-2350
  TWX: 910-741-6952

- All test sets must be tagged with:

  a. Owner's indentification and address.
  b. Nature of service or repair required.
  c. Model No.
  d. Serial No.

- Sets must be repackaged in original shipping containers using IFR packing models. If original shipping containers and materials are not available, contact IFR Customer Service Dept. for shipping instructions.

- All freight costs on non-warranty shipments are assumed by customer. (See "Warranty Packet" for freight charge policy on warranty claims.)

D-2 REPACKING PROCEDURE (Reference - Figure D-1):

1. Make sure bottom packing mold is seated on floor of shipping container.

2. Carefully wrap test set with polyethylene sheeting to protect finish.

3. Place test set into shipping container, making sure set is securely seated in bottom packing mold.

4. Place top packing mold over top of set and press down until mold rests solidly on bottom packing mold.

5. Close shipping container lids and seal with shipping tape or an industrial stapler. Tie all sides of container with break resistant rope, twine or equivalent.

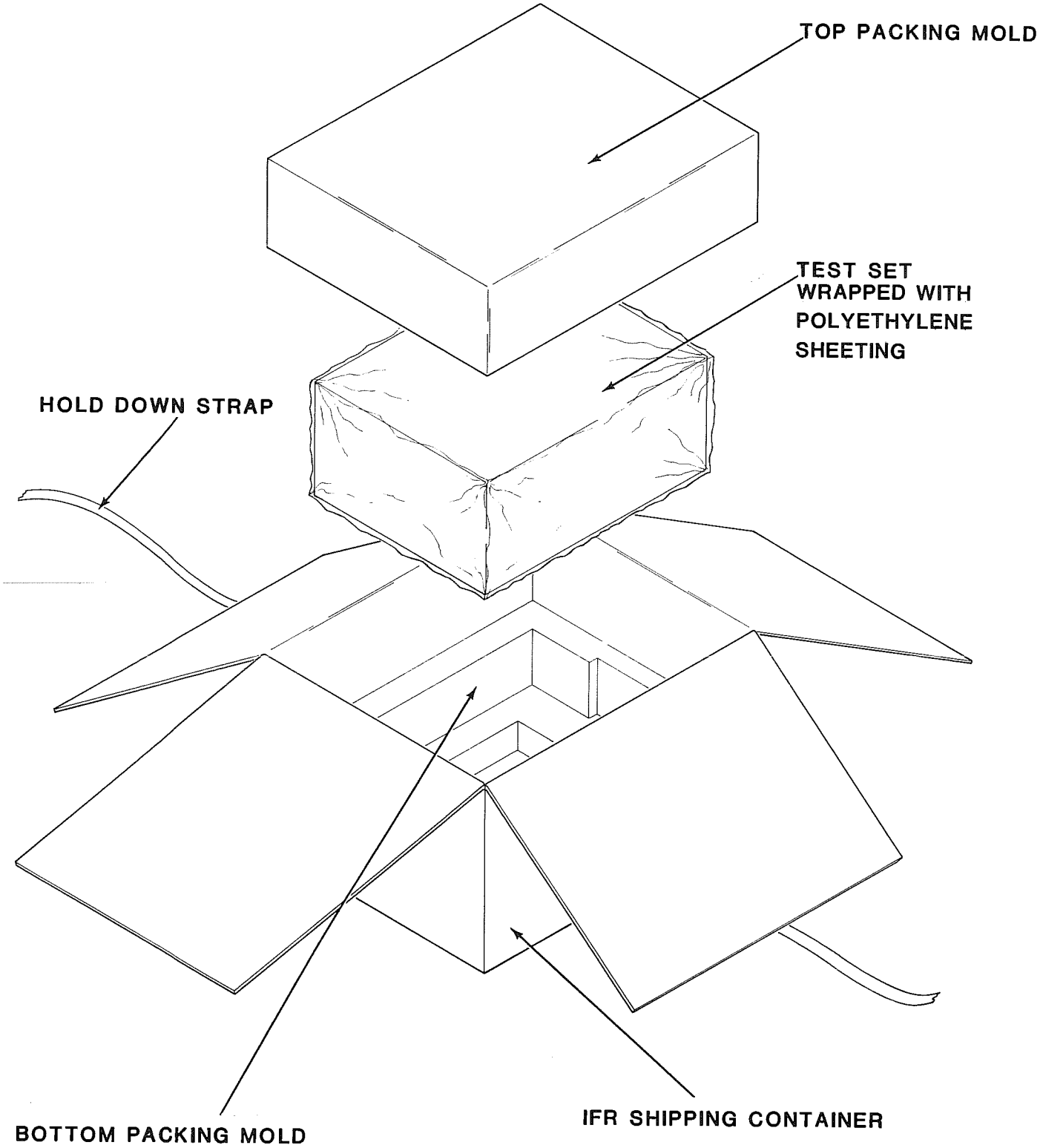

FIGURE D-1 REPACKING FOR SHIPMENT

APPENDIX E: SWEEP GENERATOR/TRACKING OSCILLOSCOPE OPERATION
(Viewing frequency response display directly on oscilloscope w/o use of detector)

When maximum frequency to be swept is below 1 MHz, operator may view frequency response curve directly on FM/AM-1000S oscilloscope, without use of a detector. If this is done, the frequency response display will appear slightly different from the display obtained when using a detector. The examples below provide comparisons between the frequency response displays using the two different viewing methods. This information should be useful in interpreting the significant characteristics of the displays.

TEST SET-UP DIAGRAM: To view frequency response envelope directly on oscilloscope (w/o use of detector), equipment set-up must be made as shown:

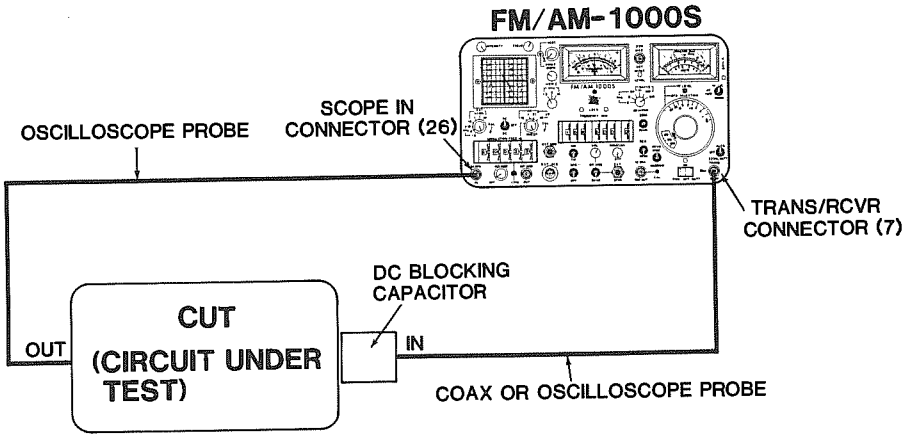

FIGURE E-1 TEST SET-UP DIAGRAM FOR VIEWING FREQUENCY RESPONSE CURVE DIRECTLY ON FM/AM-1000S OSCILLATOR OSCILLOSCOPE

TEST SET-UP
DIAGRAM: (cont'd)

EXAMPLES:

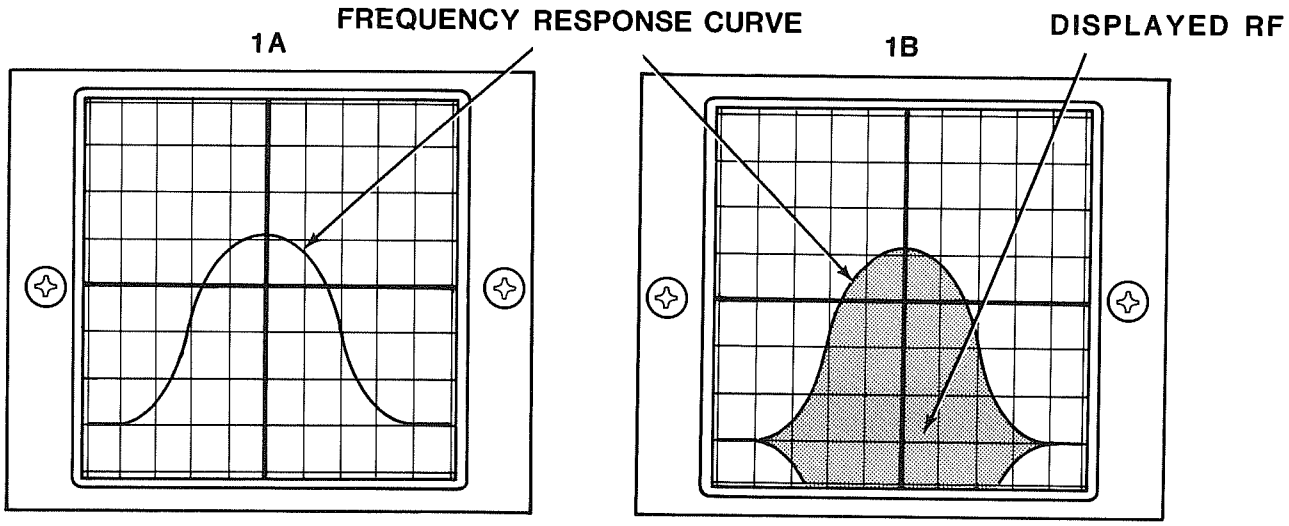

TYPICAL FREQUENCY RESPONSE CURVE (USING POSITIVE DETECTOR)

TYPICAL FREQUENCY RESPONSE CURVE AS VIEWED DIRECTLY ON OSCILLOSCPE (W/O DETECTOR)

FIGURE E-2 FREQUENCY RESPONSE CURVE COMPARISON (AS VIEWED ON OSCILLOSCOPE WITH AND WITHOUT USE OF DETECTOR

Note similarities between examples 1A & 1B above. When viewing frequency response curve directly on oscilloscope (w/o detector), operator should be concerned with response curve only; any displayed RF should be disregarded.

TEST SET-UP
DIAGRAM: (cont'd)

EXAMPLES:

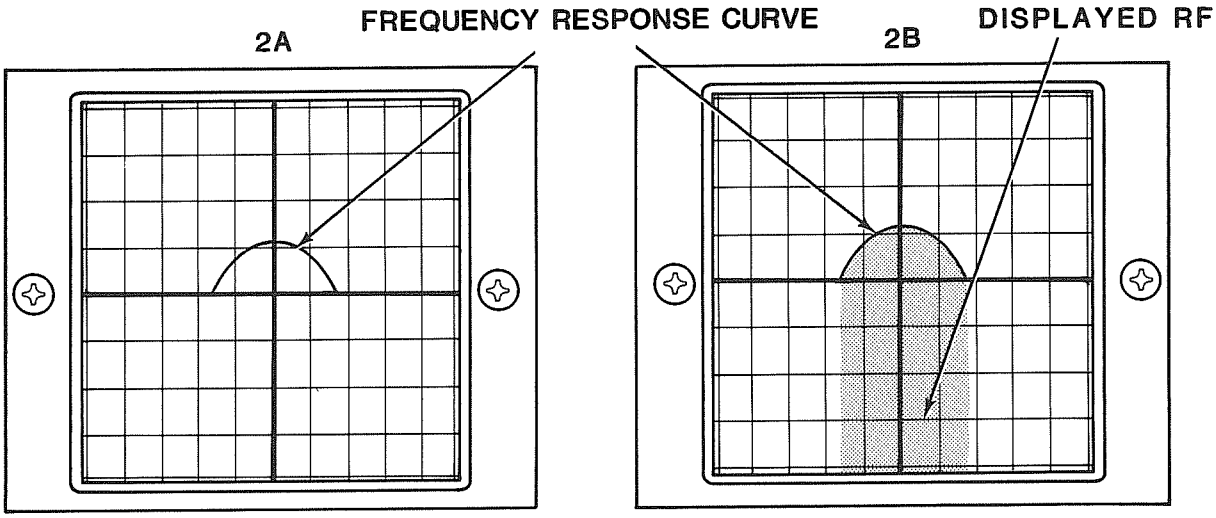

TYPICAL FREQUENCY RESPONSE CURVE AFTER REDUCING FREQUENCY DEVIATION (USING POSITIVE DETECTOR AND NARROWER FREQUENCY SPAN)

TYPICAL FREQUENCY RESPONSE CURVE AFTER REDUCING FREQUENCY DEVIATION (NARROWER FREQUENCY SPAN) AS VIEWED DIRECTLY ON OSCILLOSCOPE

FIGURE E-3 FREQUENCY RESPONSE CURVE COMPARISON (AS VIEWED ON OSCILLOSCOPE WITH AND WITHOUT USE OF DETECTOR)

Note similarities between examples 2A & 2B above. When viewing frequency response curve directly on oscilloscope (w/o detector), operator should locate legs of frequency response curve and points at which they intersect major horizontal axis.

APPENDIX F: PINOUT/CONTACT ASSIGNMENTS FOR EXTERNAL ACCESSORY & EXTERNAL MODULATION CONNECTORS

F-1 PINOUT TABLE FOR EXTERNAL ACCESSORY CONNECTOR

The table below provides pin assignments for the EXT ACC Connector (20) located on front panel of the FM/AM-1000S. This connector provides power and signal sources for external accessory equipment used with the FM/AM-1000S.

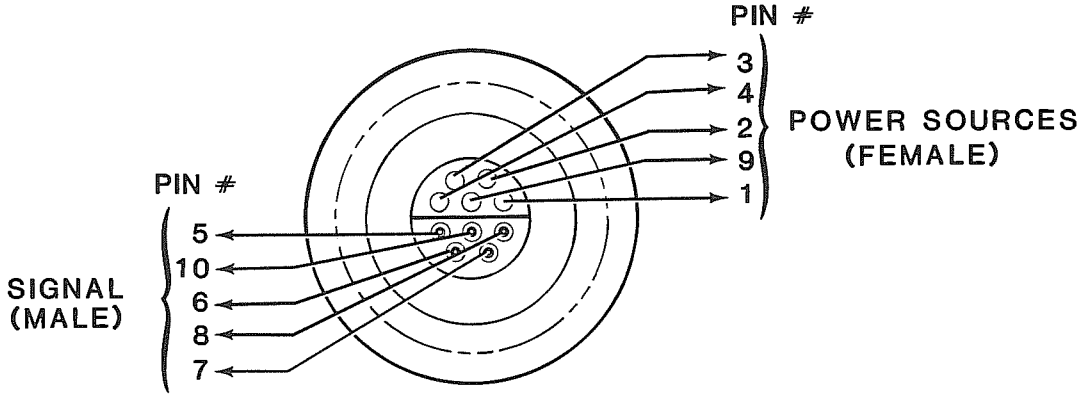

FIGURE F-1 PINOUTS FOR EXTERNAL ACCESSORY CONNECTOR (FRONT VIEW)

CONNECTOR PIN ASSIGNMENTS			
Pin No.	Power Source	Pin No.	Signals
1	+12 V	5	External Modulation
2	+11 V	6	Tone Keying*
3	+5 V	7	Generator Keying**
4	-12 V	8	Demodulated Signal Out
9	Ground	10	Signal Ground

* Open enables variable tone generator; short to ground disables variable tone generator.
** Short to ground places FM/AM-1000S into generate mode.

F-2 CONTACT ASSIGNMENTS FOR EXTERNAL MODULATION CONNECTOR

The illustration below provides contact assignments for the mating EXT MOD Connector (3 conductor ¼" phone plug) used with the EXT MOD Connector (21) on front panel of FM/AM-1000S. This connector provides an external modulation input signal and keying for the FM/AM-1000S Variable Tone generator. (See External Modulation Specifications in Appendix A.)

NOTE

- Keying affects only the variable tone generator (not the 1 kHz fixed tone generator or external modulation input.)

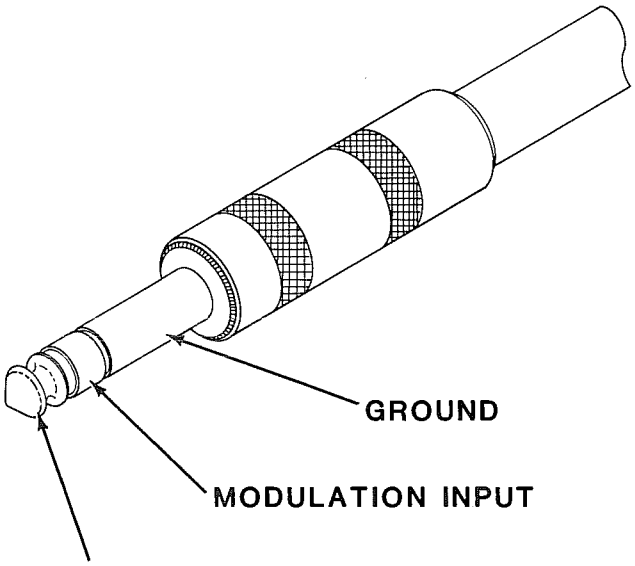

EXTERNAL KEYING
(OPEN ENABLES VARIABLE TONE GENERATOR ; SHORT TO GROUND DISABLES VARIABLE TONE GENERATOR)

FIGURE F-2 CONTACT ASSIGNMENTS FOR EXTERNAL MODULATION CONNECTOR

APPENDIX G: HOW TO CONSTRUCT AN RF PICKUP ("SNIFFER") CABLE

Described below are instructions for constructing an RF pickup cable (or "sniffer" cable), which is a required test accessory for operating procedure 4-8-2, titled "OSCILLATOR FREQUENCY MEASUREMENT", on page 4-109.

MATERIALS REQUIRED:

3' (Minimum) length of RG316/U or RG58/U coax cable w/BNC female connector on one end.
Electrical Tape
Knife
Wire Strippers
Scissors
Soldering Iron
Solder

STEP PROCEDURE

1. Prepare length of flexible coax cable as shown in Figure G-1 below:

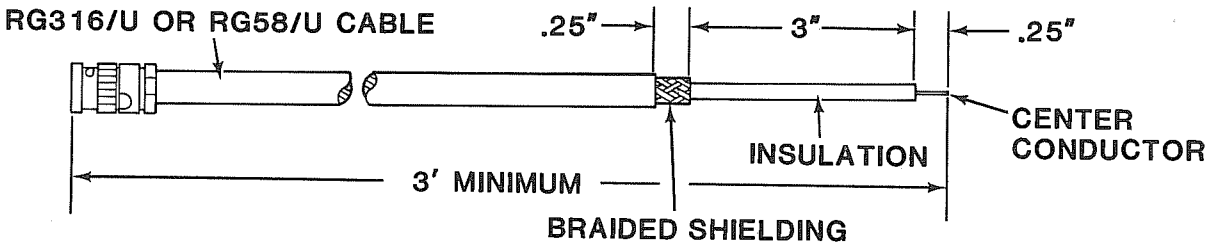

FIGURE G-1 FLEXIBLE COAX CABLE PREPARATION

2. Bend coax cable into loop as shown in Figure G-2 below and solder center conductor to braided shielding.

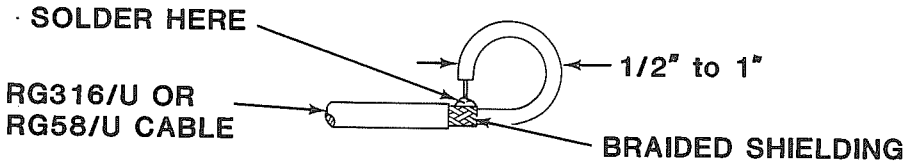

FIGURE G-2 SOLDERING CABLE CENTER CONDUCTOR TO BRAIDED SHIELDING

3. Wrap soldered joint completely with electrical tape, making sure no portion of braided shielding, solder or center conductor is exposed. RF pickup cable is now ready for use.

APPENDIX H: ABBREVIATIONS & SYMBOLS

Defined below are abbreviations and symbols commonly used throughout the FM/AM-1000S Operation Manual text:

A	- Ampere
AC	- Alternating Current
AM	- Amplitude Modulation
amp hr	- ampere hour
BATT	- Battery
BFO	- Beat Frequency Oscillator
BNC	- Bayonet-Coupled Quick Disconnect (Industry standard coax connector)
°C	- Degrees Celsius
CAL	- Calibrated
ccw	- counterclockwise
cm	- centimeter
cw	- clockwise
CRT	- Cathode Ray Tube
CUT	- Circuit Under Test
dB	- decibels
dBm	- decibels per 1 milliwatt
DC	- Direct Current
EXT ACC	- External Accessory
EXT MOD	- External Modulation
EXT V/DIV	- External Volts per Division
°F	- Degrees Fahrenheit
FM	- Frequency Modulation
GEN	- Generator
HI LVL	- High Level
HORIZ	- Horizontal
Hz	- Hertz
IC	- Integrated Circuit
IF	- Intermediate Frequency
INT MOD	- Internal Modulation
Kg	- Kilogram
kHz	- kilohertz
lbs	- pounds
min	- minute(s)
MHz	- Megahertz
µs	- microsecond
µV	- microvolt
ms	- millisecond
msec	- millisecond
mV	- millivolt
mW	- milliwatt
N/A	- Not Applicable
No.	- Number
NORM	- Normal
PLL	- Phase-Locked Loop

PPM	- Pulse Per Minute
psi	- pounds per square inch
PWR	- Power
RCVR	- Receiver
RF	- Radio Frequency
RFi	- Radio Frequency Interferance
RMS	- Root Mean Square
scope	- oscilloscope
sec	- second(s)
SIG	- Signal
SINAD	- Signal plus Noise and Distortion
TCXO	- Temperature Compensated Crystal Oscillator
TRANS	- Transmitter
typ.	- typical
UUT	- Unit Under Test
V	- Volts
Vp	- Volts Peak
Vp-p	- Volts Peak-to-Peak
Vv	- Volts Valley
VAC	- Volts Alternating Current
VDC	- Volts Direct Current
VOL	- Volume
V RMS	- Volts Root Mean Square
W	- Watts

MM-100 - Designation for test procedures which can be more easily performed using MM-100 Multi-Meter option, if FM/AM-1000S is so equipped.

Precision Simulators

FM/AM 1000S

Communications Service Monitor

DATA PACKAGE

Schematics - Printed Circuit Boards

10200 York Street / Wichita, Kansas 67215 U.S.A. / 316/522-4981 / TWX 910-741-6952

PUBLISHED BY
IFR, INC.
Wichita, Kansas

Copyright 1981 by IFR, Inc.

All rights reserved. Printed in the United States of America. No part of this publication may be reproduced, stored in a retrieval system or transmitted in any form or by any means, electronic, mechanical, photocopying, recording or otherwise, without the prior permission of the publisher.

Manual Part Number: 1007-5000-100

NOTE

All schematics and print circuit boards apply to FM/AM-1000S regardless of indicated serialization or model number designation.

TABLE OF CONTENTS

Item	Figure No.
Inter Connect	1
Regulator and Power Supply Schematic	2
Regulator and Power Supply Board	3
Duty Cycle Regulator and Battery Charger Schematic	4
Static Discharge Protector	5
1200 MHz Filter and Receive/Generate Switch	6
1200 MHz Amplifier	7
1200 MHz Amplifier PC Board Assy	8
Second Mixer - Diode Switch Schematic	9
1080 MHz Multiplier Amplifier	10
1080 MHz Multiplier Amplifier PC Board Assy	11
108 MHz Filter Schematic	12
79-80 MHz Loop Schematic	13
100 MHz Multiplier and 108 MHz Mixer	14
100 MHz Multiplier and 108 MHz Mixer PC Board Assy	15
100 MHz Filter Schematic	16
100 MHz Filter PC Board Assy	17
Hi-Freq Multi/Mixer Schematic	18
Het Amp ÷ 2 Prescaler	19
Het Amp ÷ 2 Prescaler PC Assy	20
High Freq Phase Lock CKT	21
High Frequency Phase Lock PC Board Assy	22
VCO Tuner	23
VCO Tuner PC Board Assy	24
Clock Divider	25
Clock Divider PC Board Assy	26
120 MHz Receiver, 250 kHz Output	27
120 MHz Receiver PC Board Assy	28
250 kHz IF-Mon-Audio Board Schematic	29
250 kHz IF-Mon-Audio Board Assy	30
1200-2200 MHz Oscillator, Buffer, Tune Summation	31
1200-2200 MHz Oscillator PC Board Assy	32
AGC System Schematic	33
AGC System PC Board Assy	34
Scope Interconnect	35
Scope Schematic	36
Scope Main Board Assy Drawing	37
Spectrum Analyzer Interconnect	38
Spectrum Analyzer Test Interconnect	39
Inverter Board Schematic for the Spectrum Analyzer	40
Spectrum Analyzer Inverter PC Board Assy	41
Spectrum Analyzer Board No. 1 Schematic	42
Spectrum Analyzer Board No. 2 Schematic	43

Spectrum Analyzer PC Board Assy Board No. 1 44
Spectrum Analyzer Board No. 2 Assy 45
TCXO Output Distribution Schematic 46
TCXO Output Dist Amp Assy 47
Change Notice 1, Duty Cycle Regulator 48
Change Notice 2, Rear Panel 49
FM/AM Gen Schematic Wide Dev FM 50
FM/AM Generator PC Board Assy 51
Dual Tone Generator Circuit Schematic 52
Dual Tone Generator Board No. 1 Assy 53
Dual Tone Generator Board No. 2 Assy 54
Dual Tone Generator PC Board No. 3 Assy 55
First Mixer and Switch Circuit Schematic 56
Power Monitor Assy Circuit Schematic 57
XMTR Sensor Assy Circuit Schematic 58
Relay Driver Circuit Schematic 59
Relay Driver PC Board Assy 60
High Level Amp Circuit Schematic 61
High Level Amp PC Board No. 1 Assy 62
High Level Amp PC Board No. 2 Assy 63

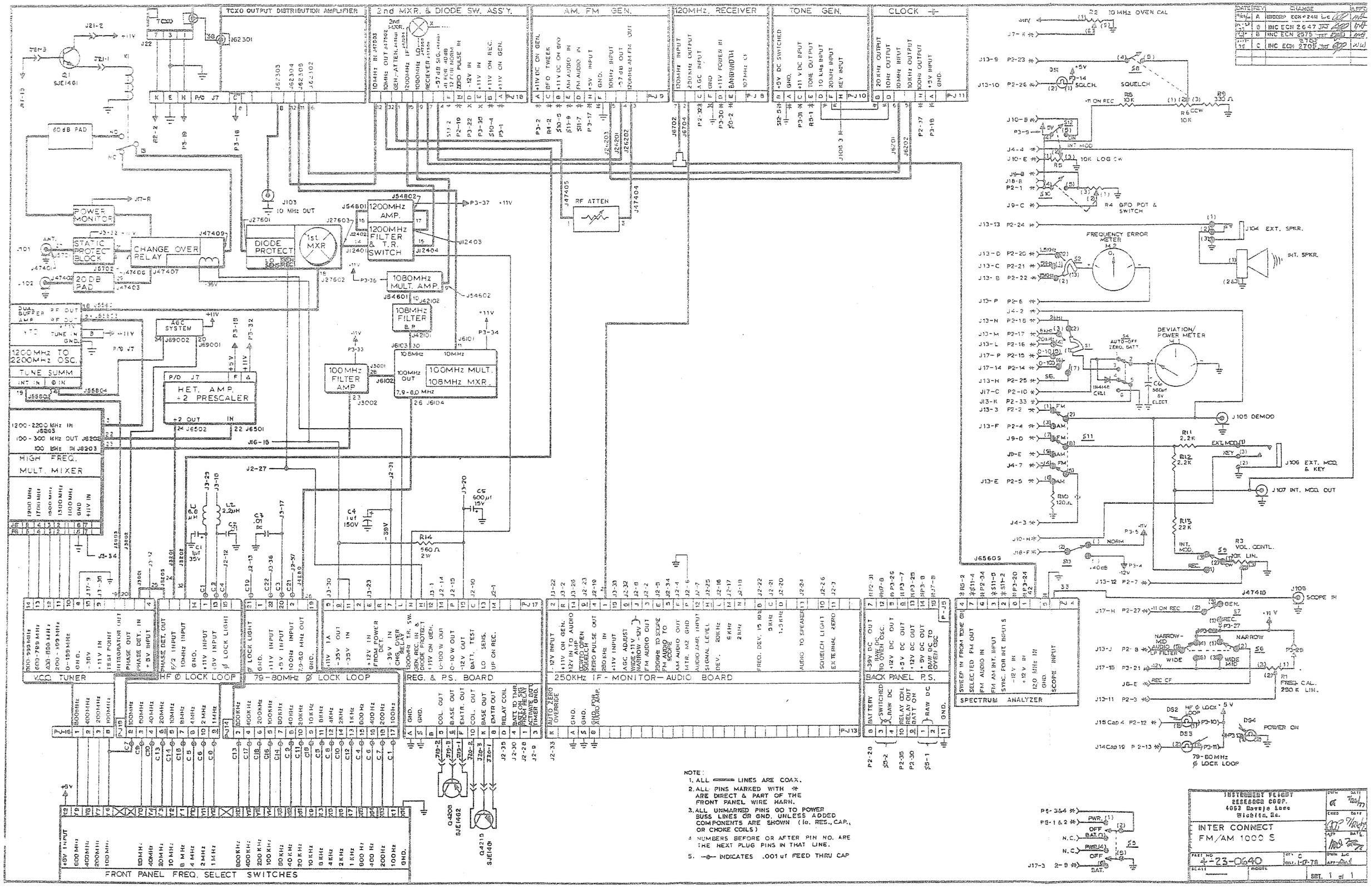
TCXO OUTPUT DISTRIBUTION AMPLIFIER
2nd MXR. & DIODE SW. ASS'Y.
AM. FM GEN.
120MHz. RECEIVER
TONE GEN.
CLOCK
60 dB PAD
POWER MONITOR
STATIC PROTECT BLOCK
CHANGE OVER RELAY
20 DB PAD
DIODE PROTECT
1st. MXR
1200MHz AMP.
1200MHz FILTER & T.R. SWITCH
1080MHz MULT. AMP.
108MHz FILTER B.P.
100MHz FILTER AMP
100MHz MULT. 108MHz MXR.
RF ATTEN
AGC SYSTEM
HET. AMP. ÷2 PRESCALER
1200 MHz TO 2200MHz OSC.
TUNE SUMM
HIGH FREQ. MULT. MIXER
VCO TUNER
IF Ø LOCK LOOP
79-80MHz Ø LOCK LOOP
REG. & P.S. BOARD
250KHz IF-MONITOR—AUDIO BOARD
BACK PANEL P.S.
SPECTRUM ANALYZER
FREQUENCY ERROR METER
DEVIATION/ POWER METER
SQUELCH
INT. SPKR.
EXT. SPKR.
EXT. MOD. & KEY
INT. MOD. OUT
SCOPE IN
POWER ON
79-80MHz Ø LOCK LOOP
FRONT PANEL FREQ. SELECT SWITCHES
NOTE:
1. ALL LINES ARE COAX.
2. ALL PINS MARKED WITH * ARE DIRECT & PART OF THE FRONT PANEL WIRE HARN.
3. ALL UNMARKED PINS GO TO POWER BUSS LINES OR GND. UNLESS ADDED COMPONENTS ARE SHOWN (Ie. RES., CAP., OR CHOKE COILS)
4. NUMBERS BEFORE OR AFTER PIN NO. ARE THE NEXT PLUG PINS IN THAT LINE.
5. —⊕— INDICATES .001 uf FEED THRU CAP
INTERCONNECT FM/AM 1000 S
4-23-0640

DATE	REV	CHANGE	APP
2/21/75	A	INCORPORATED ECN # 286 SSD	[illegible]
2/26/75	B	INCORPORATED ECN # 317 SSD	[illegible]
2/27/75	C	INCORPORATED ECN # 336 SSD	[illegible]
3/6/75	D	INCORPORATED ECN # 419 GLD	[illegible]
3/25/75	E	INCORPORATED ECN # 592 JNV	[illegible]
5/14/75	F	INC ECN 571 & 677 SLP	[illegible]
5/29/75	G	INC ECN # 743 JNV SLP	[illegible]
9-27-75	H	INC ECN 799 SLP	[illegible]
11-18-75	J	INC ECN 1116 1135 [illegible]	[illegible]
2-9-76	K	INCORP 1290, 1210, 1313 SSD	[illegible]
5-11-76	L	INCORP. ECN # 1464 JNV SSD	[illegible]
5-16-76	M	INCORPORATED ECN # 1620 JNV	[illegible]
10/7/76	N	INCORP ECN # 1674 JNV	[illegible]
1/4/77	P	INC ECN # 1842 RKK	[illegible]
8/19/78	R	INC ECN # 2193 & 2204 LC	[illegible]
1-28-80	S	INC ECN 2850 [illegible]	[illegible]

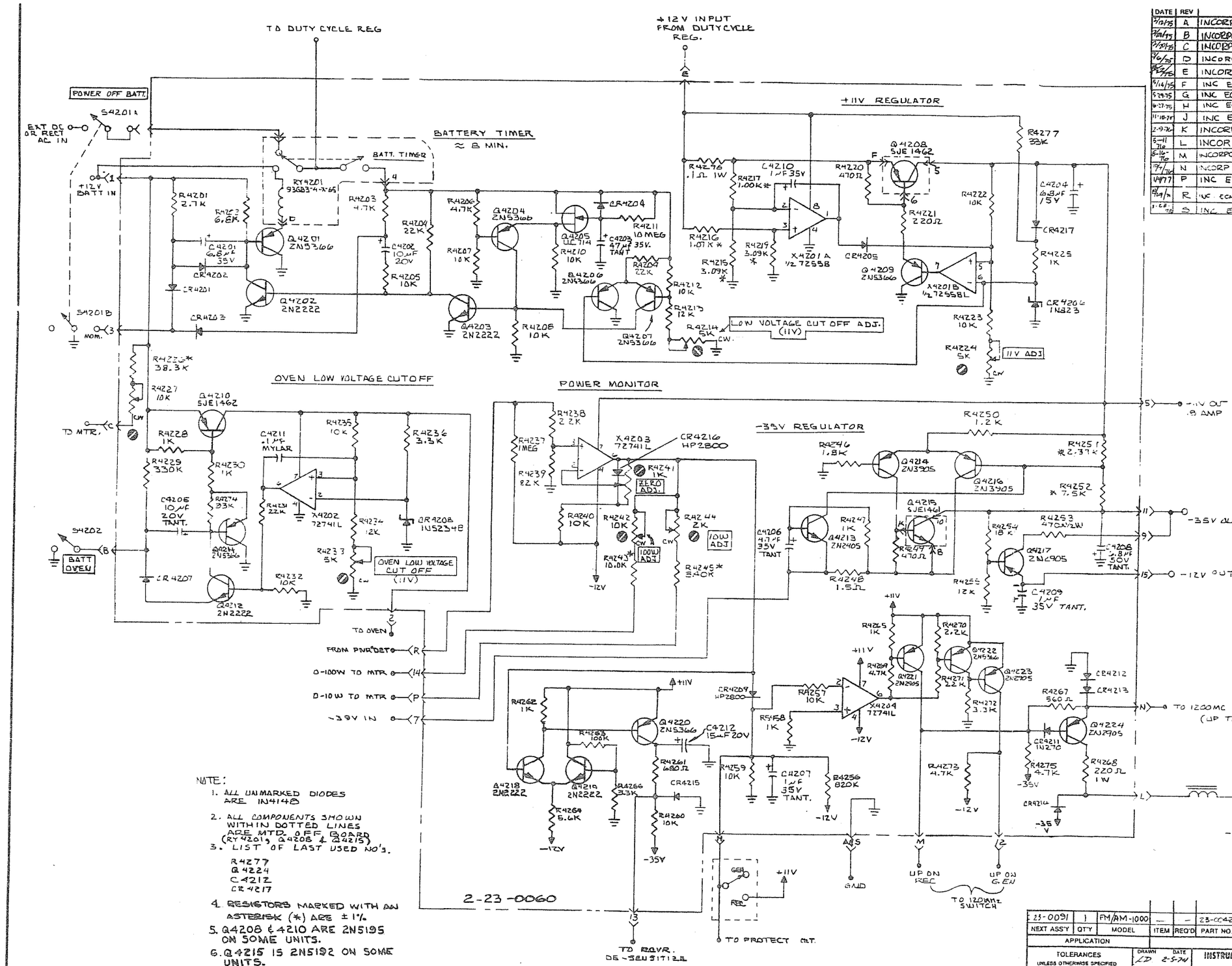

NOTE:

1. ALL UNMARKED DIODES ARE 1N4148
2. ALL COMPONENTS SHOWN WITHIN DOTTED LINES ARE MTD. OFF BOARD (RY4201, Q4208 & Q4215)
3. LIST OF LAST USED NO'S.

   R4277
   Q4224
   C4212
   CR4217

4. RESISTORS MARKED WITH AN ASTERISK (*) ARE ± 1%
5. Q4208 & 4210 ARE 2N5195 ON SOME UNITS.
6. Q4215 IS 2N5192 ON SOME UNITS.
7. Q4202, Q4203, Q4212, Q4218, & Q4219 ARE 2N3415 ON SOME UNITS.

2-23-0060
ARTWORK

1-23-0091
PARTS LIST

NEXT ASS'Y	QTY	MODEL	ITEM	REQ'D	PART NO.	DESCRIPTION
23-0091	1	FM/AM-1000	—	—	23-0042	SCHEMATIC

APPLICATION — LIST OF MATERIALS

TOLERANCES: UNLESS OTHERWISE SPECIFIED ALL DIMENSIONS APPLY AFTER FINISH. DECIMALS .XX = ± .010 .XXX = ± .005; ANGLES: ± 1/2°; FRACTIONS: ± 1/64; SURFACE ROUGHNESS 125; REMOVE ALL BURRS

DRAWN LD 2-5-74 — CHECKED HS 2-14-74 — APPROVED 2-13-75

INSTRUMENT FLIGHT RESEARCH CORPORATION, WICHITA, KANSAS.

TITLE: REGULATOR & POWER SUPPLY SCHEMATIC (FM-AM-1000)

MATERIAL — TREATMENT — FINISH

SIZE C — PART NUMBER 3-23-0042 — REV S — SCALE — SHEET 1 OF 1

NOTES:

1. ALL RESISTORS ARE 1/4 W, 10 % TOLERANCE EXCEPT AS NOTED.
2. ALL CAPACITOR VALUES ARE IN pF EXCEPT AS NOTED.
3. COMPONENT LEADS MAY EXTEND .04 TO .06 BEYOND BOTTOM OF BOARD AFTER SOLDERING.
4. MAXIMUM HEIGHT OF COMPONENTS TO BE .38 FROM COMPONENT SIDE OF BOARD.
5.
6. * NOTES 1%, 1/4W RES.

7 R56 IS MTD ON BACK SIDE AS SHOWN IN BOTTOM VIEW ONLY ON "E" REV. ARTWORK. FOR "F" REV IT WILL LOCATE AS IN THE LARGER VIEWS.

DATE	REV	CHANGE	APP'S
8-4-77	R	OR16 REL	
12-5-78	S	INC ECN 2890	WW

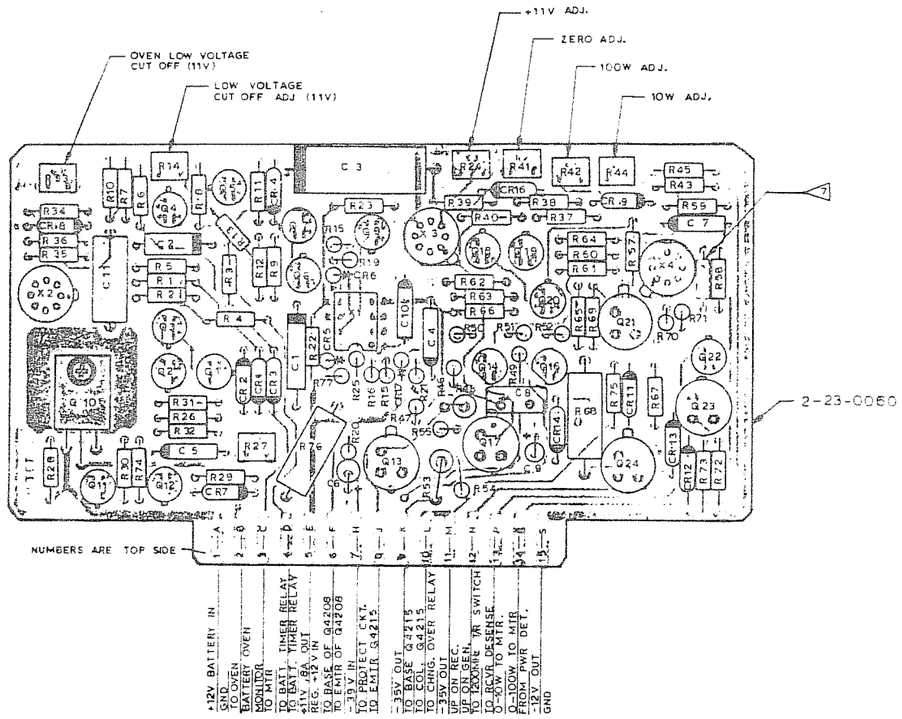

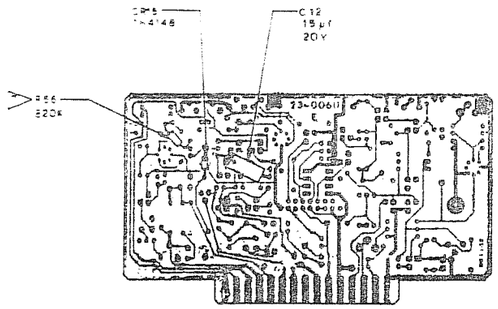

BOTTOM VIEW

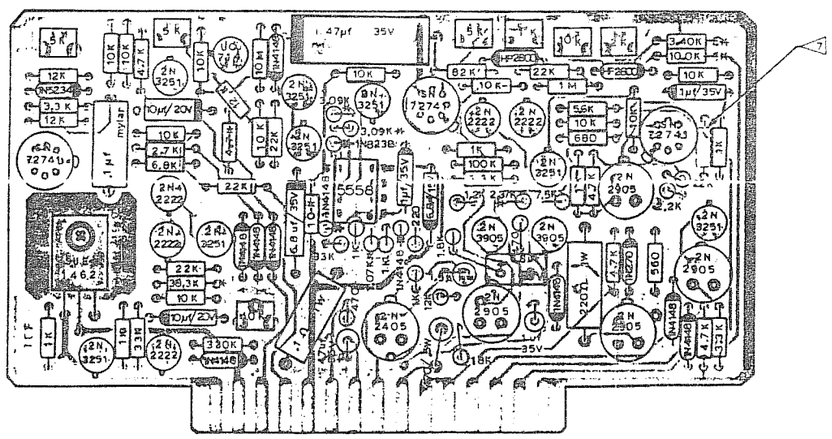

PART LIST No. 1-23-0091
SCHEMATIC No. 3-23-0042

ITEM	REQ'D	PART NO.	DESCRIPTION
1	1	23-0061	REG & PS BD ASS'Y.

LIST OF MATERIALS

TOLERANCES: UNLESS OTHERWISE SPECIFIED ALL DIMENSIONS APPLY AFTER FINISH. DECIMALS ± .010 ANG ± 1° FRACT ± 1/64 FINISH 125 REMOVE ALL BURRS

DRAWN 8-4-77

- IFR INC -
WICHITA, KANSAS

REGULATOR & POWER SUPPLY BOARD (FM AM 1000/A)

SIZE D | 4-23-0091 | REV S

SCALE 2X1 | WEIGHT | SHEET 1 OF 1

DATE	REV	CHANGE	APP
12-27-73	A	INC. ECN. # 063 LD	
7/16/75	B	INCORPORATED ECN # 289 SSD.	
4-7-76	C	INCORPORATED ECN #536 & #567 JWV	
8/24/76	D	INCORPORATED ECN #751 JWV	
3/18/76	E	INCORP ECN # 1377 JW SD	
4/16/76	F	INCORP. ECN # 1394 JW SD	
8/24/77	G	INCORP ECN # 2153 AA	
9/13/77	H	INC. ECN # 2482 & 2505 & 2529 LD	
1-9-78	J	INC ECN 2698 JWV	

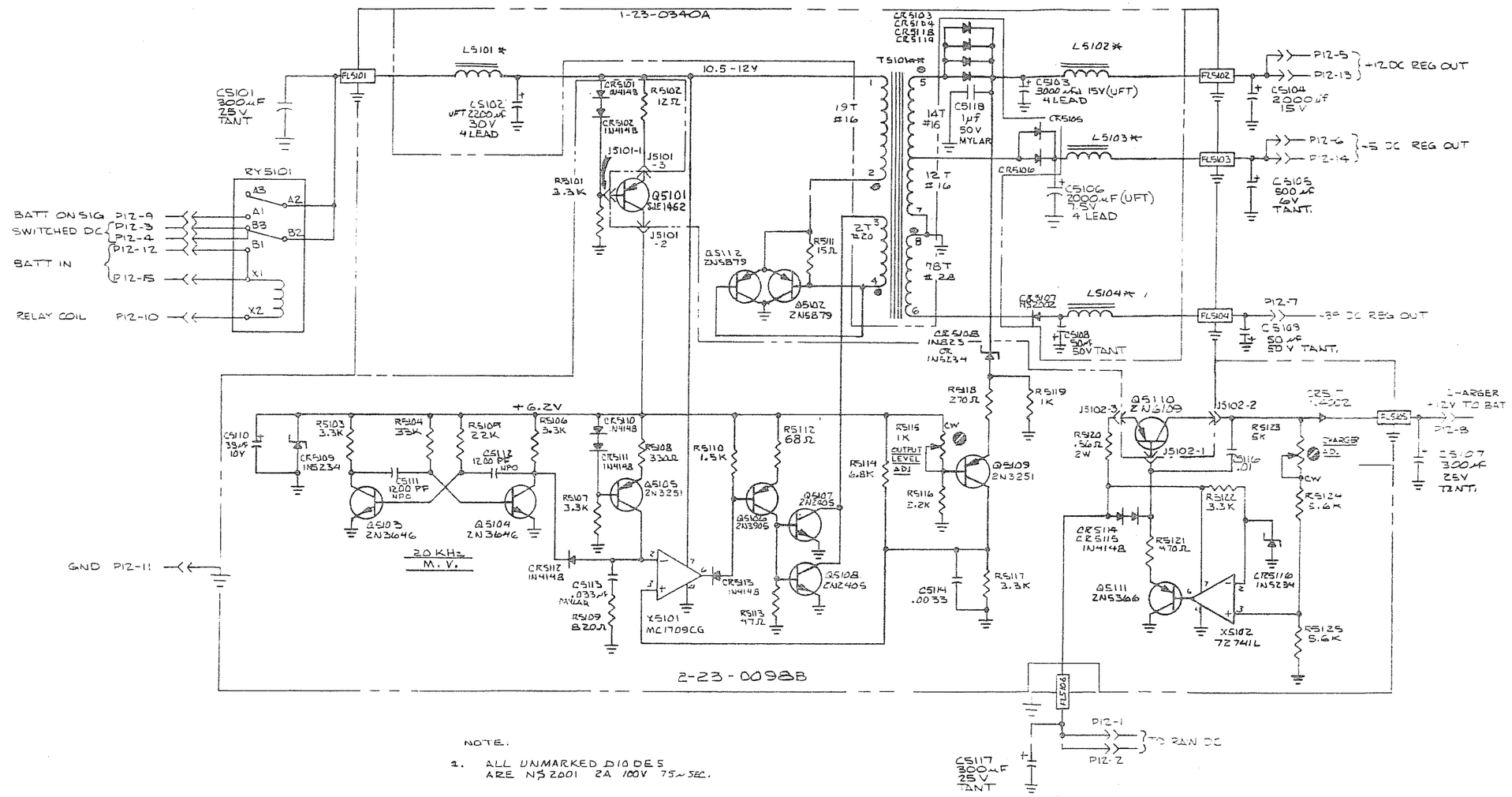

NOTE:

1. ALL UNMARKED DIODES ARE NS 2001 2A 100V 75~SEC.

2. * L5101, 2, 3, 4 ARE 28T #17 WIRE ON MAGNETICS CORE 55930-A2

3. ** T5101 IS ON MAGNETICS CORE 55548-A2

NEXT ASS'Y	QTY	MODEL	ITEM	REQ'D	PART NO.	DESCRIPTION
23-0090	1	AM/AM 1000	1	1	23-0051	SCHEMATIC

APPLICATION — LIST OF MATERIALS

TOLERANCES: UNLESS OTHERWISE SPECIFIED ALL DIMENSIONS APPLY AFTER FINISH. DECIMALS: .XX = ± .010 .XXX = ± .005; ANGLES: ± 1/2°; FRACTIONS: ± 1/64; SURFACE ROUGHNESS 125; REMOVE ALL BURRS

DRAWN: DATE 2-13-74 — CHECKED: H.S. DATE 2-15-74 — APPROVED: MJ DATE 6-4-75

INSTRUMENT FLIGHT RESEARCH CORPORATION, WICHITA, KANSAS.

TITLE: DUTY CYCLE REG. & BATT CHARGER SCHEMATIC

MATERIAL — TREATMENT — FINISH

SIZE C — PART NUMBER 3-23-0051 — SCALE — WEIGHT — SHEET 1 OF 2

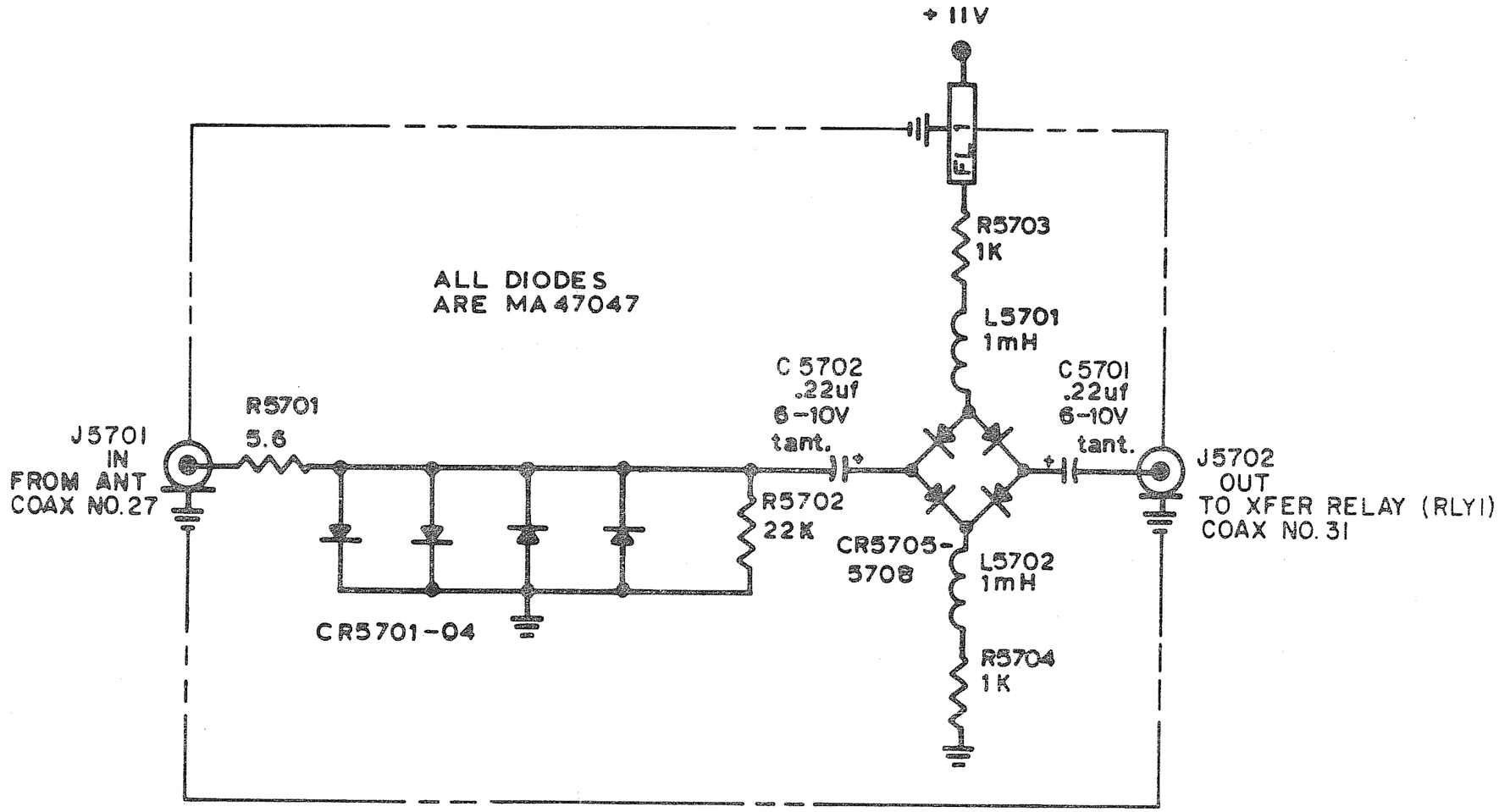

DATE	REV	CHANGE	APP'D
1/5/78	B	INCORP. ECN #2678 AA	WW
6-1-76	A	INCORP ECN #1475 RKK	MW

INSTRUMENT FLIGHT
RESEARCH CORP.
4053 Navajo Lane
Wichita, Ks.

STATIC DISCHARGE
PROTECTOR
(FM-1000)

DWN	DATE 10-16-75
CHKD	DATE 10-15-75
APP	DATE 10-17-75
PART NO 1-23-0457	REV B DATE 1/5/78
DWN RKK	APP MW
SCALE —	MODEL FM-1000
SHT. 1 of 1	

DATE	REV	CHANGE	APP'D
7/23	A	INC ECN # 1 LD	
7/75	B	INC ECN # 802 DLP	
4/12/78	C	INC ECN # 2914 JJ	WW

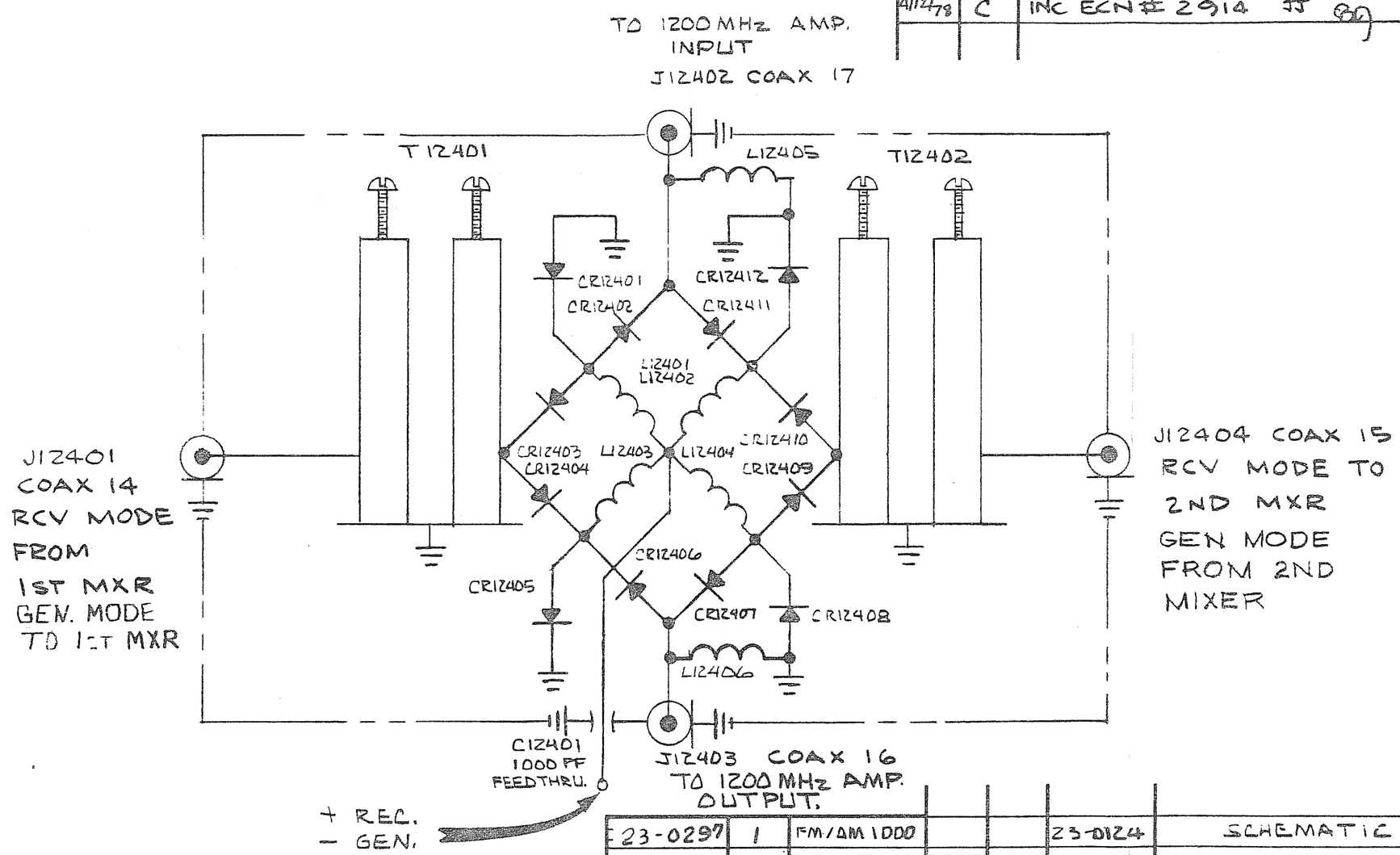

NOTE:
1. ALL DIODES ARE MA47047
2. ALL CHOKE COILS ARE .33 μH

NEXT ASS'Y	QT'Y	MODEL	ITEM	REQ'D	PART NO.	DESCRIPTION
23-0297	1	FM/AM 1000			23-0124	SCHEMATIC

APPLICATION — LIST OF MATERIALS

TOLERANCES
UNLESS OTHERWISE SPECIFIED
ALL DIMENSIONS APPLY AFTER FINISH
DECIMALS: .xx = ± .010 .xxx = ± .005
ANGLES: ± 1/2°
FRACTIONS: ± 1/64
SURFACE ROUGHNESS 125
REMOVE ALL BURRS

DRAWN DATE 4-5-74
CHECKED DATE 8-6-74
APPROVED DATE 7/75

INSTRUMENT FLIGHT RESEARCH CORPORATION
WICHITA, KANSAS.

TITLE 1200MHz FILTER & REC.-GEN. SW.

MATERIAL
TREATMENT
FINISH

SIZE A | PART NUMBER 1-23-0124 | REV C
SCALE — | WEIGHT — | SHEET 1 OF 1

DATE	REV	CHANGE	APP'D
1-7-78	A	INC ECN 2682 JAL	WW
1-16-78	A-1	INC ECN 2709 JAL	WW

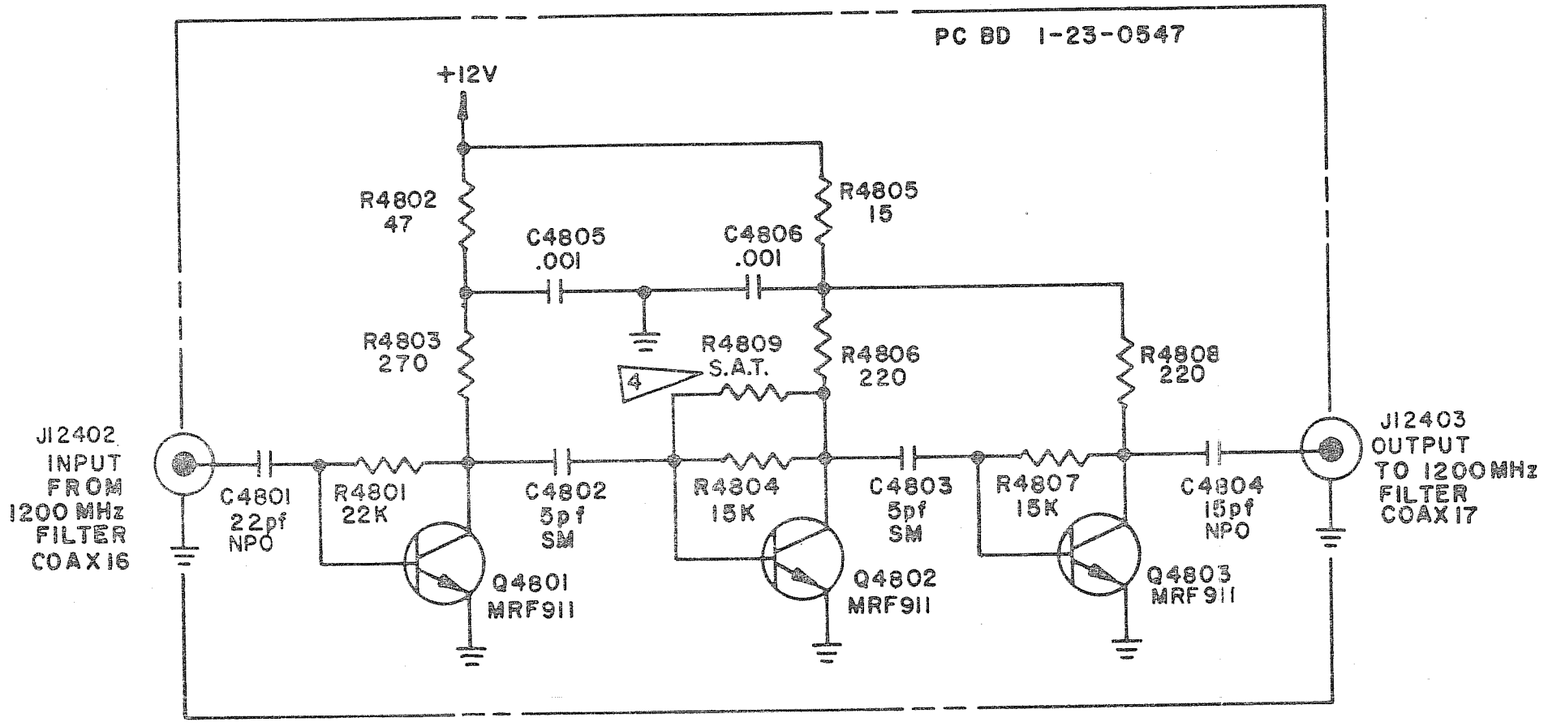

NOTES:

1. ALL RESISTORS ARE IN 1/4 W, 10%, AND VALUES ARE IN OHMS UNLESS OTHERWISE SPECIFIED.
2. ALL CAPACITORS ARE IN MICROFARADS UNLESS OTHERWISE SPECIFIED.
3. LAST NUMBERS USED: R4809, C4806, Q4803

4 SELECT AT TEST TO REDUCE GAIN

ITEM	REQ'D	PART NO.	DESCRIPTION
1	1	23-0548	SCHEMATIC

LIST OF MATERIALS

TOLERANCES
UNLESS OTHERWISE SPECIFIED
ALL DIMENSIONS APPLY AFTER FINISH
DECIMALS: .XX = ± .010 .XXX = ± .005
ANGLES: ± 1/2°
FRACTIONS: ± 1/64
SURFACE ROUGHNESS 125
REMOVE ALL BURRS

DRAWN SD DATE 5-5-76
CHECKED DATE 5-10-76
APPROVED DATE 5-8-76

- IFR INC -
WICHITA, KANSAS

TITLE 1200MHz AMPLIFIER

MATERIAL —
FINISH —

SIZE B | PART NUMBER 2-23-0548 | REV A-1
SCALE — | WEIGHT — | SHEET 1 OF 1

23-0549 | NEXT ASS'Y | QT'Y 1 | MODEL | APPLICATION

DATE	REV	CHANGE	APP'D
[illegible]	A	INITIAL RELEASE	[illegible]

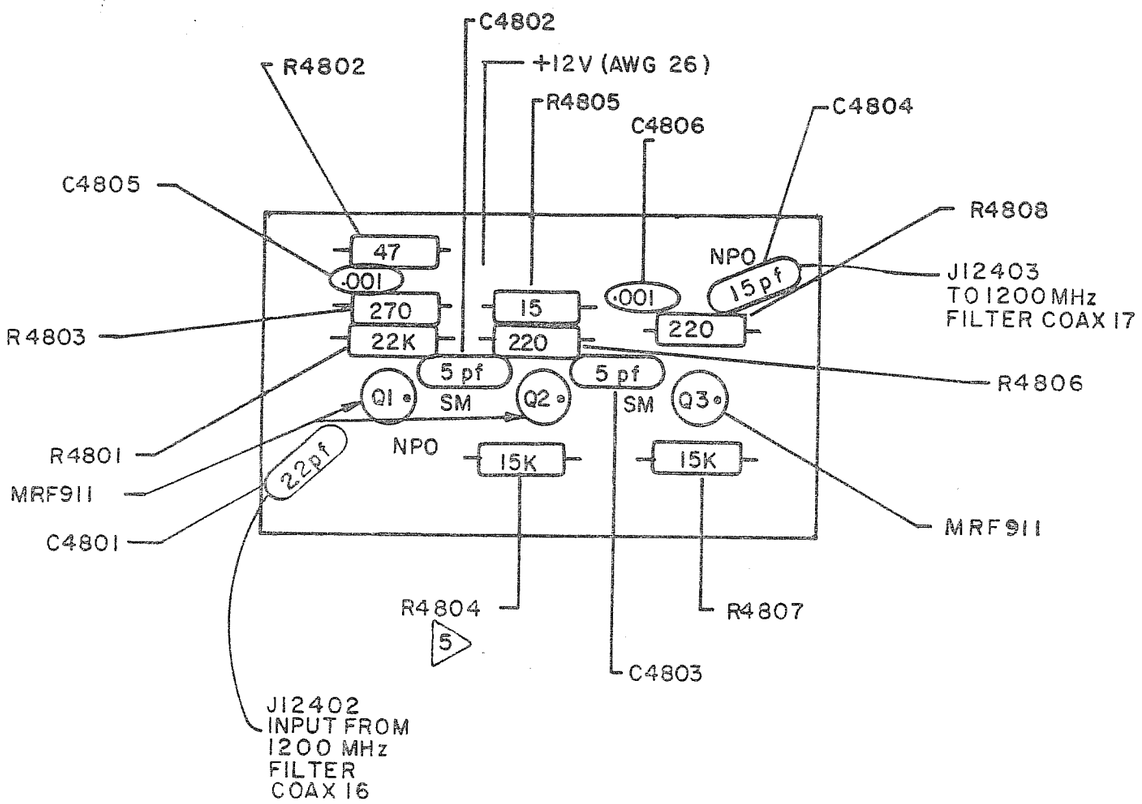

5 R4809 SAT PARALLELS R4804 AS REQ'D

4. MAXIMUM HEIGHT OF COMPONENTS FROM COMPONENT SIDE OF BOARD IS .35.

3. COMPONENT LEADS MAY EXTEND .04-.06 BEYOND BOTTOM OF BOARD AFTER SOLDERING

2. UNLESS OTHERWISE SPECIFIED:

   ALL CAPACITORS ARE IN uF

   ALL RESISTORS ARE 1/4W ±10%

1. REF DWG:

   PC BOARD 1-23-0547

   SCHEMATIC 2-23-0548

NOTES:

NEXT ASS'Y	QT'Y	MODEL	ITEM	REQ'D	PART NO.	DESCRIPTION
23-0554	1	FM/AM1000S				
23-0554	1	FM/AM1000A	1	1	23-0549	ASSY P/L

APPLICATION — LIST OF MATERIALS

TOLERANCES
UNLESS OTHERWISE SPECIFIED
ALL DIMENSIONS APPLY AFTER FINISH
DECIMALS: ± .005
ANGLES: ± 1/2°
FRACTIONS: ± 1/64
SURFACE ROUGHNESS 125
REMOVE ALL BURRS

DRAWN DATE [illegible]
CHECKED DATE
APPROVED DATE

INSTRUMENT FLIGHT RESEARCH CORPORATION
WICHITA, KANSAS

TITLE
1200 Mhz AMPLIFIER
PC BD ASSY

MATERIAL
TREATMENT
FINISH

SIZE B
PART NUMBER 2-23-0549
REV A
SCALE
WEIGHT
SHEET 1 OF 1

DATE	REV	CHANGE	APP'D
2-4-76	A	INCORP ECN #1271 SSD	
12-7-77	B	INC ECN # 2581 JAJ	
2-23-78	C	INC ECN 2709 JAJ	
9-8-78	D	INC ECN 2722 JAJ	

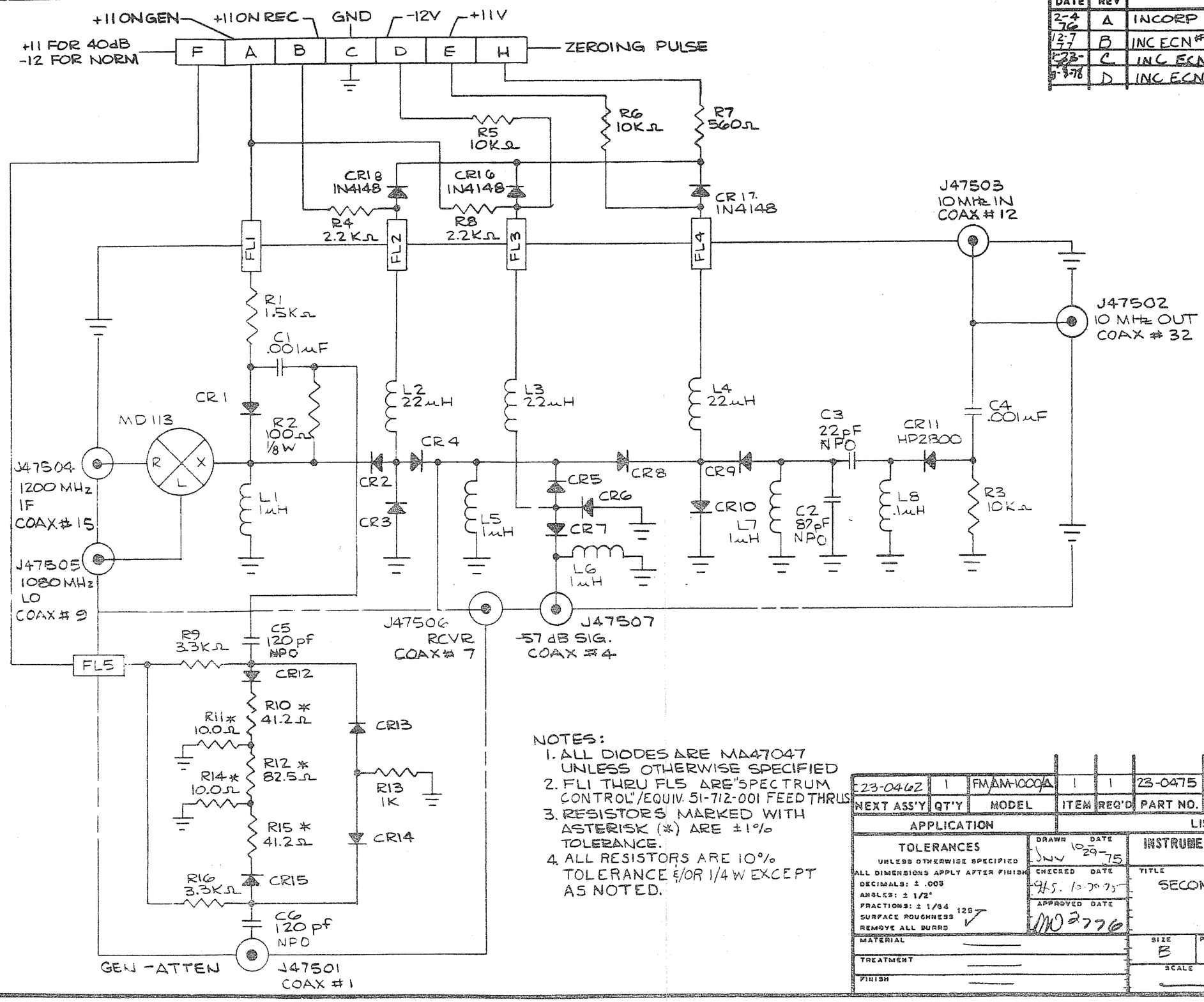

NOTES:
1. ALL DIODES ARE MA47047 UNLESS OTHERWISE SPECIFIED
2. FL1 THRU FL5 ARE "SPECTRUM CONTROL"/EQUIV. 51-712-001 FEEDTHRUS
3. RESISTORS MARKED WITH ASTERISK (*) ARE ±1% TOLERANCE.
4. ALL RESISTORS ARE 10% TOLERANCE &/OR 1/4 W EXCEPT AS NOTED.

NEXT ASS'Y	QT'Y	MODEL	ITEM	REQ'D	PART NO.	DESCRIPTION
23-0462	1	FM/AM-1000/A	1	1	23-0475	SCHEMATIC

APPLICATION — LIST OF MATERIALS

TOLERANCES UNLESS OTHERWISE SPECIFIED
ALL DIMENSIONS APPLY AFTER FINISH
DECIMALS: ± .005
ANGLES: ± 1/2°
FRACTIONS: ± 1/64
SURFACE ROUGHNESS 125
REMOVE ALL BURRS

DRAWN JNV DATE 10-29-75
CHECKED DATE
APPROVED DATE

INSTRUMENT FLIGHT RESEARCH CORPORATION
WICHITA, KANSAS

TITLE: SECOND MIXER-DIODE SWITCH SCHEMATIC FM/AM-1000/A

MATERIAL
TREATMENT
FINISH

SIZE B | PART NUMBER 2-23-0475 | REV D
SCALE | WEIGHT | SHEET 1 OF 1

DATE	REV	CHANGE	APP'D
11 18 76	A	ADDED OUTPUT TUNELINE WW	MD
12-16-76	B	ADDED INPUT, TUNELINE NOMENCLATURE, ECN #1792 WW	MD
11-29-77	C	ECN# 2598 JAJ	MD
1-17-78	D	ECN 2709	

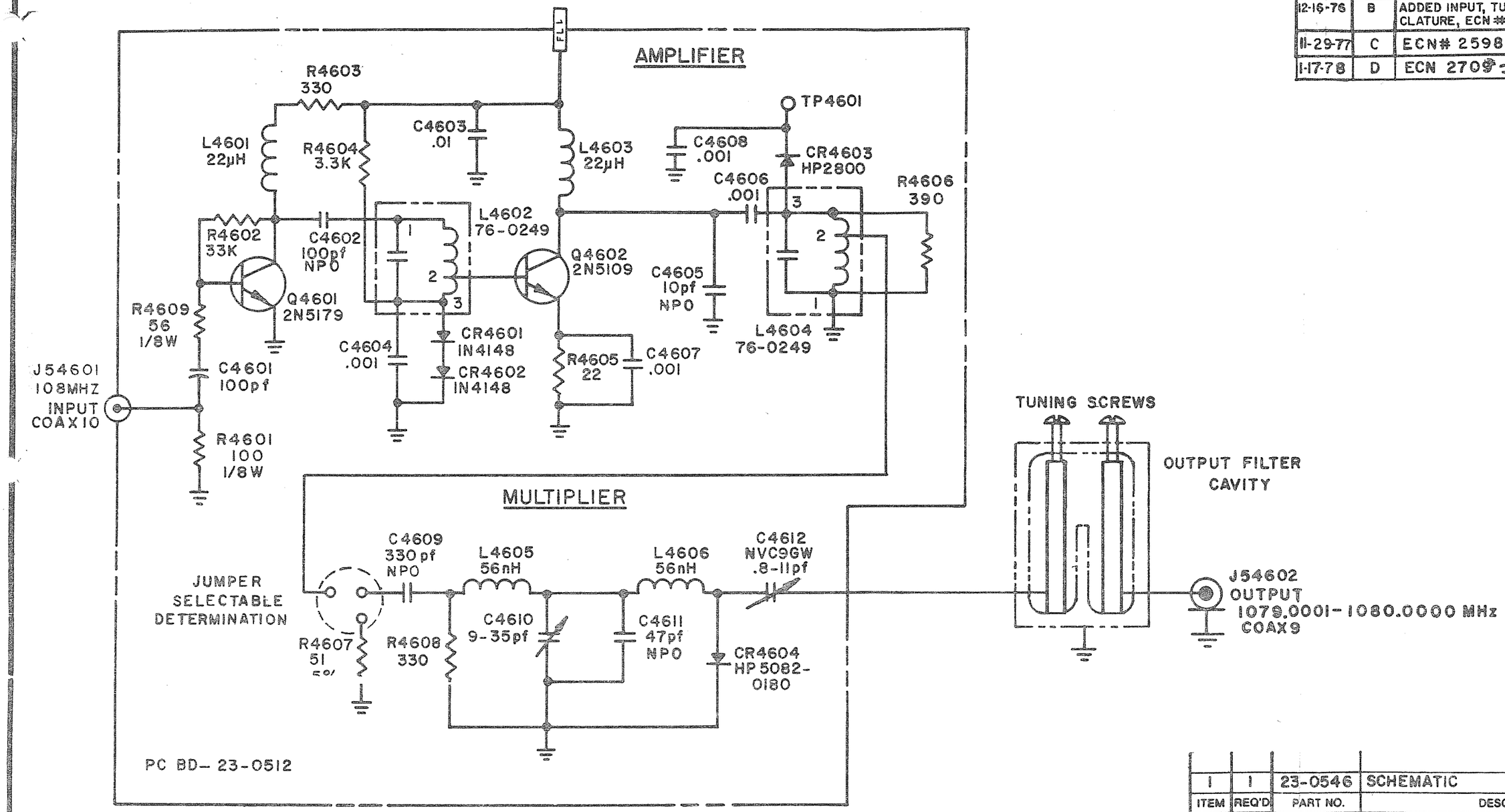

ITEM	REQ'D	PART NO.	DESCRIPTION
1	1	23-0546	SCHEMATIC

LIST OF MATERIALS

NOTES:
1. RESISTORS ARE 1/4 W, 10%, AND VALUES ARE IN OHMS UNLESS OTHERWISE SPECIFIED.
2. CAPACITORS ARE IN MICROFARADS UNLESS OTHERWISE SPECIFIED.
3. LAST NUMBERS USED: R4609, C4612, CR4604, L4606, Q4602, TP4601

NEXT ASS'Y 23-0513	QTY 1	MODEL MA-44A	APPLICATION

TOLERANCES
UNLESS OTHERWISE SPECIFIED
ALL DIMENSIONS APPLY AFTER FINISH
DECIMALS: .xx = ± .010 .xxx = ± .005
ANGLES: ± 1/2°
FRACTIONS: ± 1/64
SURFACE ROUGHNESS 125
REMOVE ALL BURRS

DRAWN SD DATE 4-23-76
CHECKED WJ 4-26-76 DATE
APPROVED MD 7-23-76 DATE

MATERIAL –
FINISH –

-IFR INC-
WICHITA, KANSAS

TITLE
1080 MHz MULTIPLIER AMPLIFIER

SIZE	PART NUMBER	REV
B	2-23-0546	D

SCALE | WEIGHT | SHEET 1 OF 1

DATE	REV	CHANGE	APP'D
11-9-77	D	ORIGINAL RELEASE TT	
1-19-78	D-1	INC ECN 2709 JAS	
6-28-79	D-2	INC ECN # 3050	

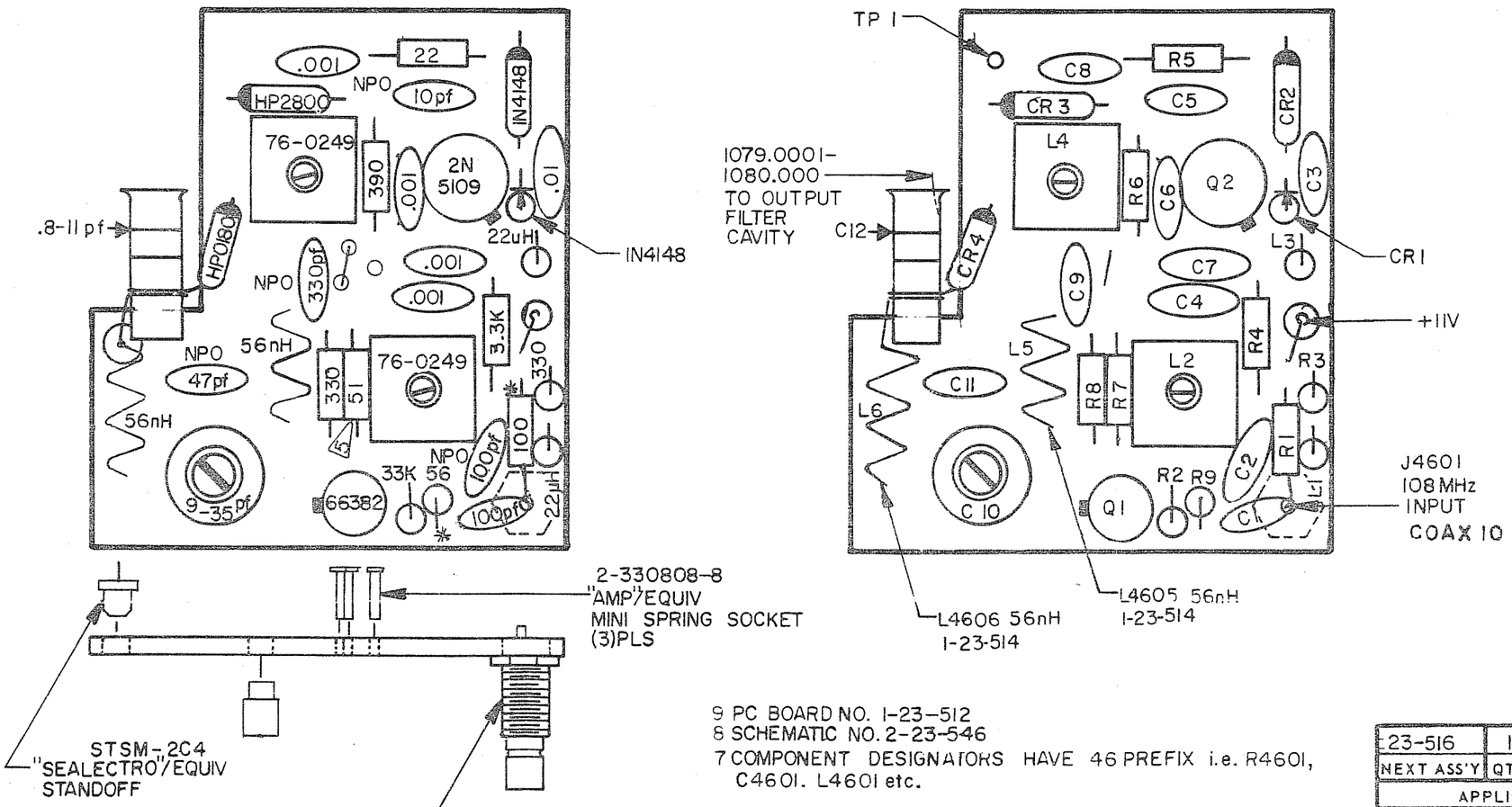

9 PC BOARD NO. 1-23-512
8 SCHEMATIC NO. 2-23-546
7 COMPONENT DESIGNATORS HAVE 46 PREFIX i.e. R4601, C4601. L4601 etc.

6 "*" DENOTES 1/8W, 10% RES.
5 R7 IS 51 OHM, 1/4W, 5% RES.
4 MAX. HEIGHT OF COMPONENTS TO BE .53 FROM COMPONENT SIDE OF BOARD.
3 COMPONENT LEADS MAY EXTEND .04 TO .06 BEYOND BOTTOM OF BOARD AFTER SOLDERING.
2 ALL CAPACITORS ARE IN µf EXCEPT AS NOTED.
1 ALL RESISTORS ARE 1/4W, 10% TOL. EXCEPT AS NOTED.
NOTES

NEXT ASS'Y	QT'Y	MODEL	ITEM	REQ'D	PART NO.	DESCRIPTION
23-516	1	FM/AM1000A/S				

APPLICATION — LIST OF MATERIALS

TOLERANCES UNLESS OTHERWISE SPECIFIED
ALL DIMENSIONS APPLY AFTER FINISH
DECIMALS: ± .005
ANGLES: ± 1/2°
FRACTIONS: ± 1/64
SURFACE ROUGHNESS 125
REMOVE ALL BURRS

DRAWN TenEyck DATE 11-9-77
CHECKED DATE
APPROVED DATE

INSTRUMENT FLIGHT RESEARCH CORPORATION
WICHITA, KANSAS

TITLE
1080MHz MULTIPLIER AMPLIFIER
PC BOARD ASSEMBLY

MATERIAL
TREATMENT
FINISH

SIZE B | PART NUMBER 2-23-513 | REV D-2
SCALE 2:1 | WEIGHT — | SHEET 1 OF 1

DATE	REV	CHANGE	APP'D
1-17-78	A	INC ECN 2709 JAS	WW

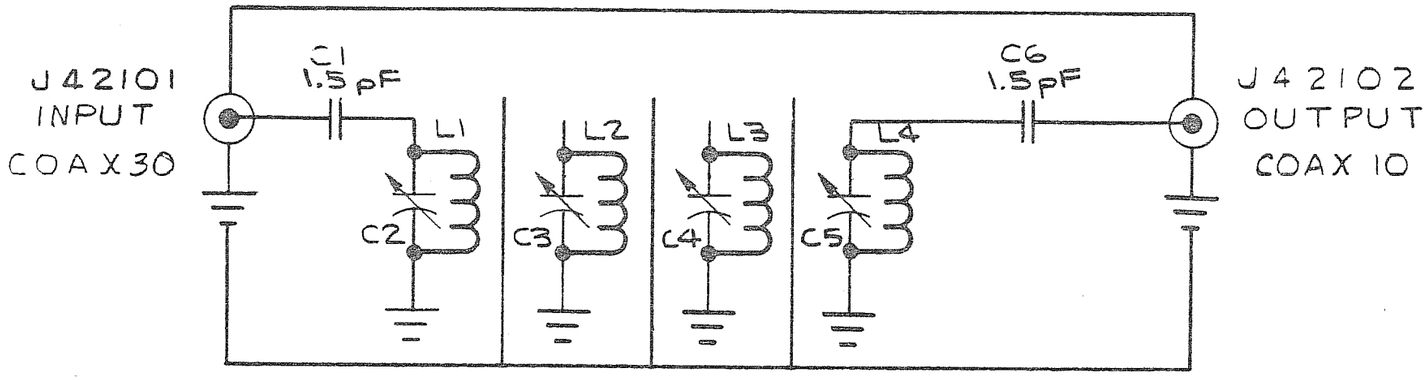

NOTES:

1. C2 THRU C5 ARE VC26G "JFD"/EQUIV. TRIMMER CAPS.
2. L1 THRU L4 ARE 9 TURNS #22 GUAGE ENAMEL COATED COPPER WIRE WOUND ON 7/16 DIA COIL FORMS PLACED AROUND C2 THRU C5.

NEXT ASS'Y	QT'Y	MODEL	ITEM	REQ'D	PART NO.	DESCRIPTION
	1	FM/AM-1000	1	1	23-0421	108 MHz FILTER SCHEM.

APPLICATION — LIST OF MATERIALS

TOLERANCES
UNLESS OTHERWISE SPECIFIED
ALL DIMENSIONS APPLY AFTER FINISH
DECIMALS: .xx = ± .010 .xxx = ± .005
ANGLES: ± 1/2°
FRACTIONS: ± 1/64
SURFACE ROUGHNESS 125
REMOVE ALL BURRS

DRAWN JNV DATE 5/21/75
CHECKED DATE
APPROVED DATE

INSTRUMENT FLIGHT RESEARCH CORPORATION
WICHITA, KANSAS.

TITLE
108 MHz FILTER
SCHEMATIC
FM/AM-1000

MATERIAL —
TREATMENT —
FINISH —

SIZE | PART NUMBER 1-23-0421 | REV A
SCALE — | WEIGHT — | SHEET 1 OF 1

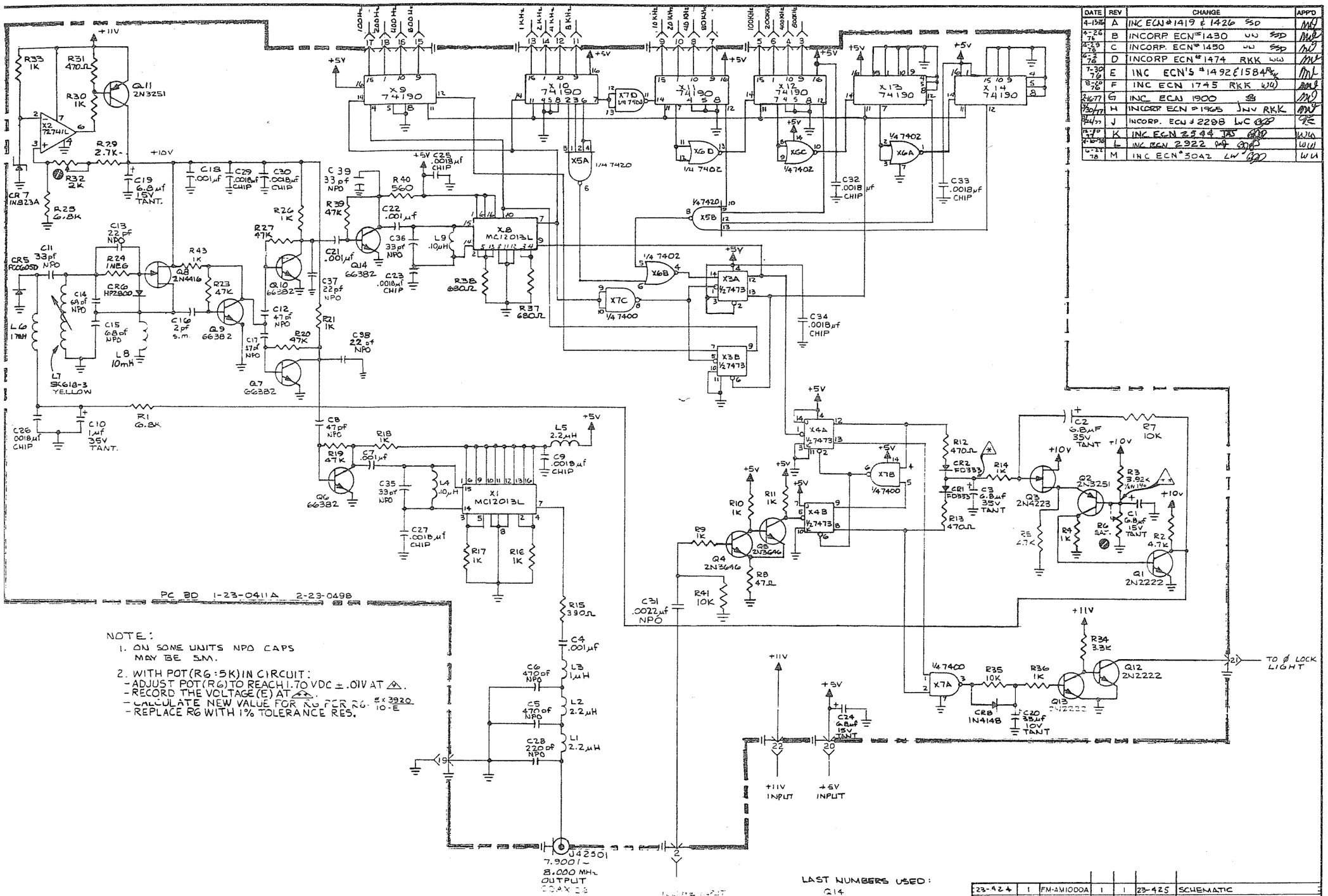

DATE	REV	CHANGE	APPD
4-15-76	A	INC ECN #1419 & 1426 SSD	
4-26-76	B	INCORP. ECN #1430 WW SSD	
4-29-76	C	INCORP. ECN #1450 WW SSD	
6-2-76	D	INCORP ECN #1474 RKK WW	
7-30-76	E	INC ECN'S #1492 & 1584 RKK	
8-20-76	F	INC ECN 1745 RKK WW	
2-6-77	G	INC ECN 1900	
3-30-77	H	INCORP ECN #1965 JNV RKK	
3-24-77	J	INCORP. ECN #2298 LWC	
12-19-77	K	INC ECN 2544 TAS	WW
4-10-78	L	INC ECN 2922	WW
6-22-78	M	INC ECN #3042 LW	WW

NOTE:
1. ON SOME UNITS NPO CAPS MAY BE S.M.
2. WITH POT(R6:5K) IN CIRCUIT:
- ADJUST POT(R6) TO REACH 1.70 VDC ± .01V AT △.
- RECORD THE VOLTAGE(E) AT △.
- CALCULATE NEW VALUE FOR R6: $\frac{5 \times 3920}{10 - E}$
- REPLACE R6 WITH 1% TOLERANCE RES.

LAST NUMBERS USED:
Q14
R42
CR8 (3 & 4 NOT USED)
L9
C38
X14

NEXT ASSY	QTY	MODEL	ITEM	REQ'D	PART NO.	DESCRIPTION
23-424	1	FM-AM1000A	1	1	23-425	SCHEMATIC

APPLICATION — LIST OF MATERIALS

TOLERANCES
UNLESS OTHERWISE SPECIFIED
ALL DIMENSIONS APPLY AFTER FINISH
DECIMALS: .xx = ± .010 .xxx = ± .005
ANGLES: ± 1/2°
FRACTIONS: ± 1/64
SURFACE ROUGHNESS 125
REMOVE ALL BURRS

DRAWN SSD 7-22-75
CHECKED DLF 7-22-75
APPROVED MD 8-22-75

INSTRUMENT FLIGHT RESEARCH CORPORATION
WICHITA, KANSAS.

TITLE: 79-80 MHz LOOP SCHEMATIC FM/AM 1000A

MATERIAL —
TREATMENT —
FINISH —

SIZE C — PART NUMBER 3-23-425 — REV M
SCALE — WEIGHT —
SHEET 1 OF 1

DATE	REV	CHANGE	APP'D
9/4/75	A	INCORPORATED ECN # 65 SSD DL	MD
3-1-76	B	INCORP ECN # 1154 GP. SSD	MD
7/6/77	C	INCORP. ECN # 1911 & 1959 JWW	MD
7/29/77	D	INCORPORATED ECN # 2002 RKR JWW	MD
8/3/77	E	INCORP. ECN # 2388 & 2403 LC	MD
7-13-78	F	INC. ECN 2709 JD	MD
4-22-81	G	INC ECN 2951 JD	MD

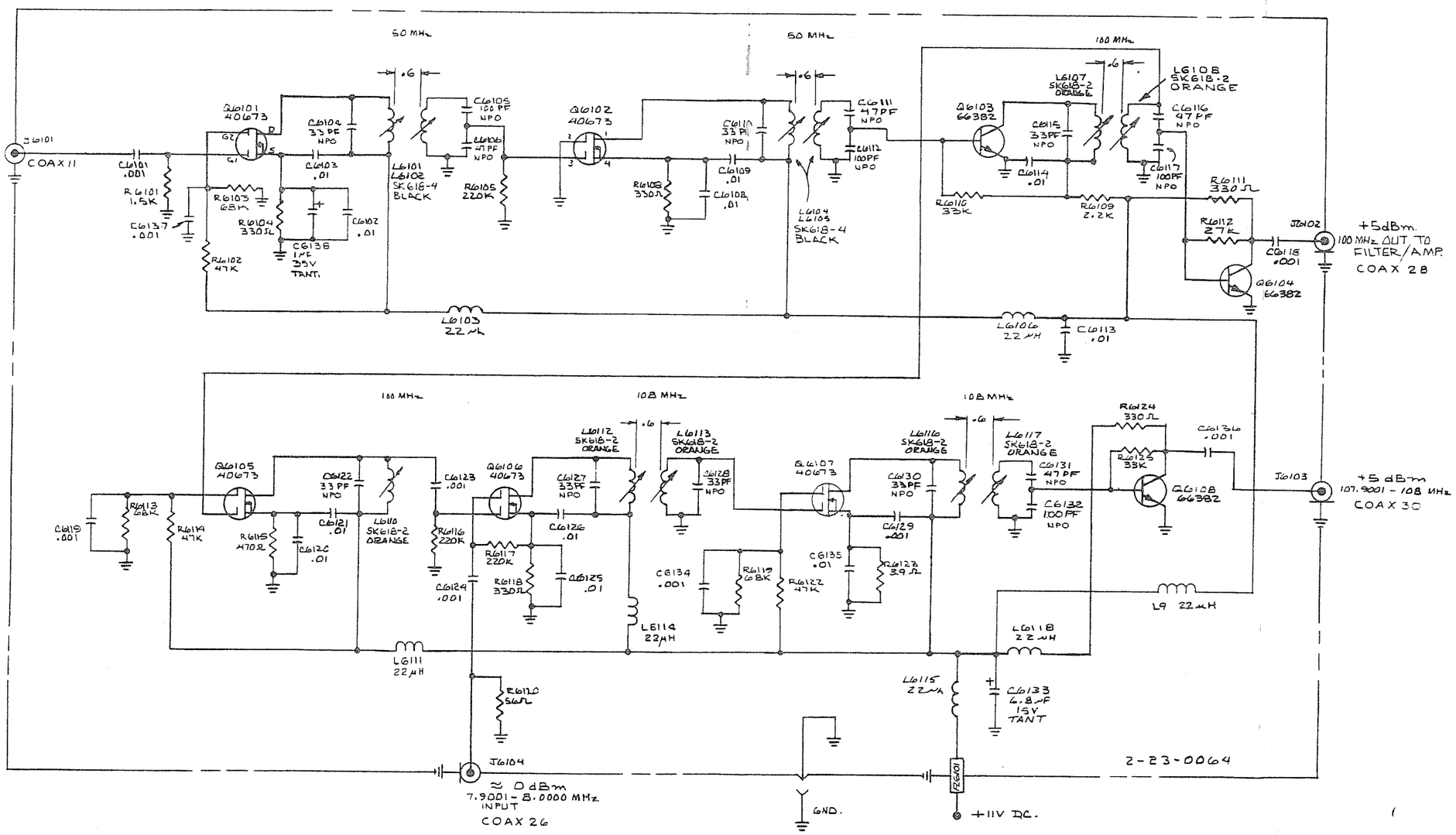

NOTE:

1. LAST USED NUMBERS:
   R 6125
   C 6138
   L 6118

NEXT ASS'Y	QTY	MODEL	ITEM	REQ'D	PART NO.	DESCRIPTION
23-0095	—	RM-FM-100	—	—	23-0061	SCHEMATIC

APPLICATION — LIST OF MATERIALS

TOLERANCES: UNLESS OTHERWISE SPECIFIED ALL DIMENSIONS APPLY AFTER FINISH. DECIMALS: .xx = ± .010 .xxx = ± .005; ANGLES: ± 1/2°; FRACTIONS: ± 1/64; SURFACE ROUGHNESS 125; REMOVE ALL BURRS. J

DRAWN DATE 2-26-74

CHECKED DATE 4-7-74

APPROVED DATE 12-9-75

MATERIAL

TREATMENT

FINISH

INSTRUMENT FLIGHT RESEARCH CORPORATION
WICHITA, KANSAS.

TITLE: 100 MHz MULT. & 108 MHz MIXER

SIZE C — PART NUMBER 3-23-0061 — REV G

SCALE — WEIGHT — SHEET 1 OF 1

-77	C	ORIGINAL RELEASE
11-17-77	J-1	INC ECN 2709
4-21-78	J-2	INC ECN 2951
8-2-78	K	INC. ECN 2954 & 2999 TenEyck

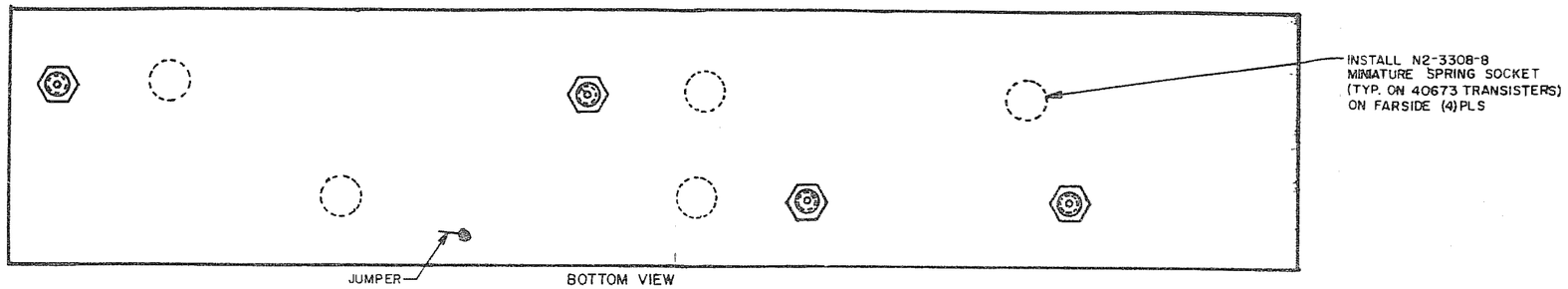

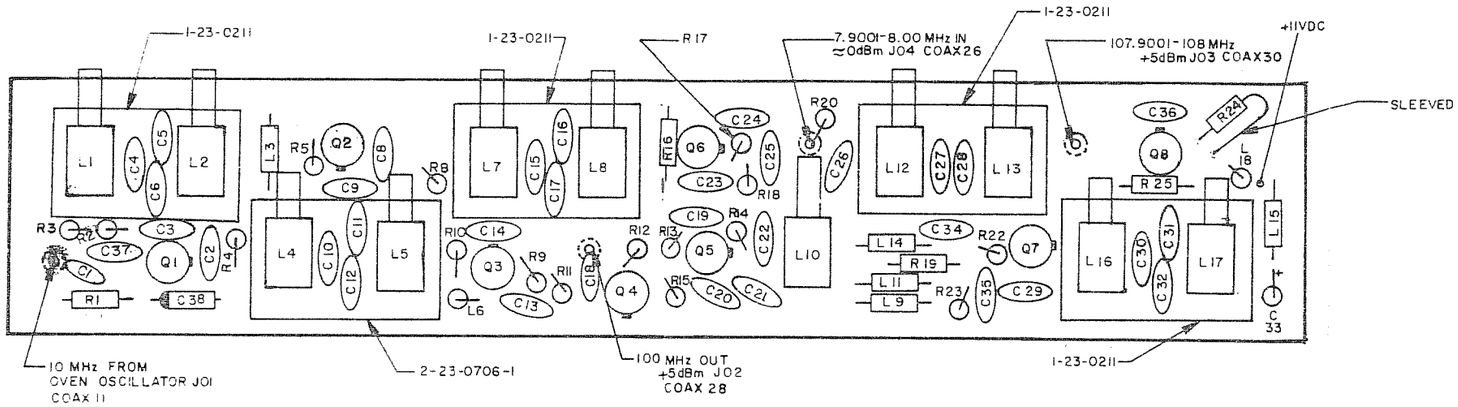

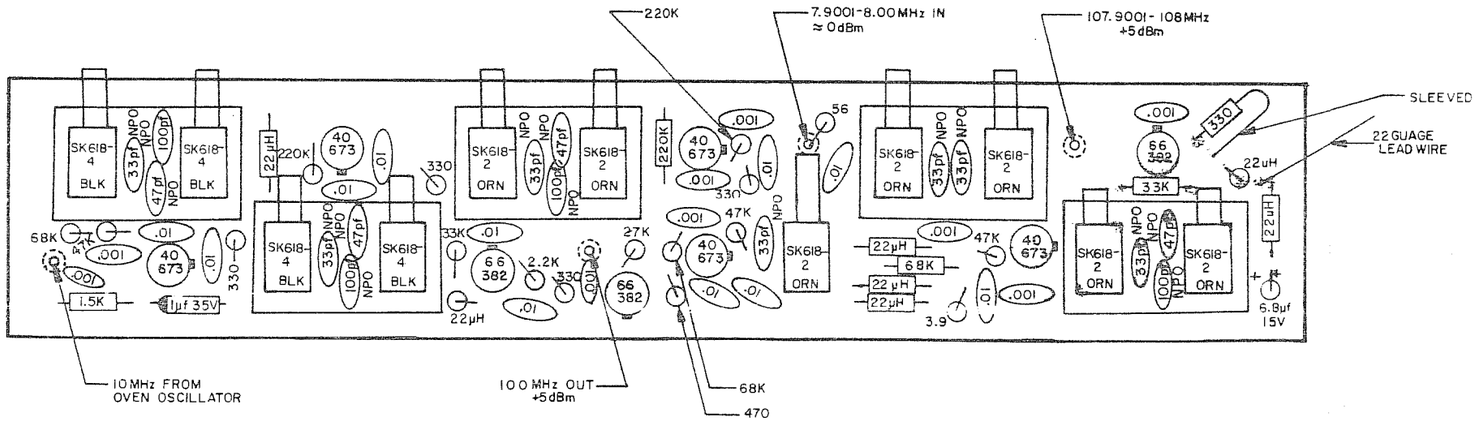

NOTE:

1. ALL RESISTORS ARE 1/4 W, 10% TOL. EXCEPT AS NOTED.
2. ALL CAPACITORS ARE IN µf EXCEPT AS NOTED.
3. COMPONENT LEADS MAY EXTEND .04 TO .06 BEYOND BOTTOM OF BOARD AFTER SOLDERING.
4. MAXIM HEIGHT OF COMPONENTS TO BE .45 FROM COMPONENT SIDE OF BOARD.
5. ALL COMPONENT CALL OUTS ARE PREFIXED WITH 61 i.e. C6102, R6102

P.C. BOARD: 2-23-0064
SCHEMATIC: 3-23-0061

ITEM	REQ'D	PART NO.	DESCRIPTION

LIST OF MATERIALS

23-0219	1	F16/24-10003	
23-0219	1	F16/24-10004	
NEXT ASSY	QTY	MODEL	APPLICATION

TOLERANCES
UNLESS OTHERWISE SPECIFIED
ALL DIMENSIONS APPLY AFTER FINISH
DECIMALS: .XX = ± .010 .XXX = ± .005
ANGLES: ± 1/2°
FRACTIONS: ± 1/64
SURFACE ROUGHNESS 125
REMOVE ALL BURRS

DRAWN TENEYCK DATE 9-14-77
CHECKED DATE
APPROVED DATE

-IFR INC-
WICHITA, KANSAS

TITLE 100MHz MULTIPLIER AND 108MHz MIXER PC BOARD ASSEMBLY

MATERIAL
FINISH

SIZE C PART NUMBER 3-23-0095
SCALE 2:1 WEIGHT SHEET 1

DATE	REV	CHANGE	APP'D
2/12/75	A	INCORPORATED ECN #291 SGD	MC
9-5-75	B	INCORPORATED ECN #983 SGD	MC
3/29/77	C	INCORP. ECN #1958 JNV	MC
1-18-78	D	INC. ECN 2709 JDT	MC

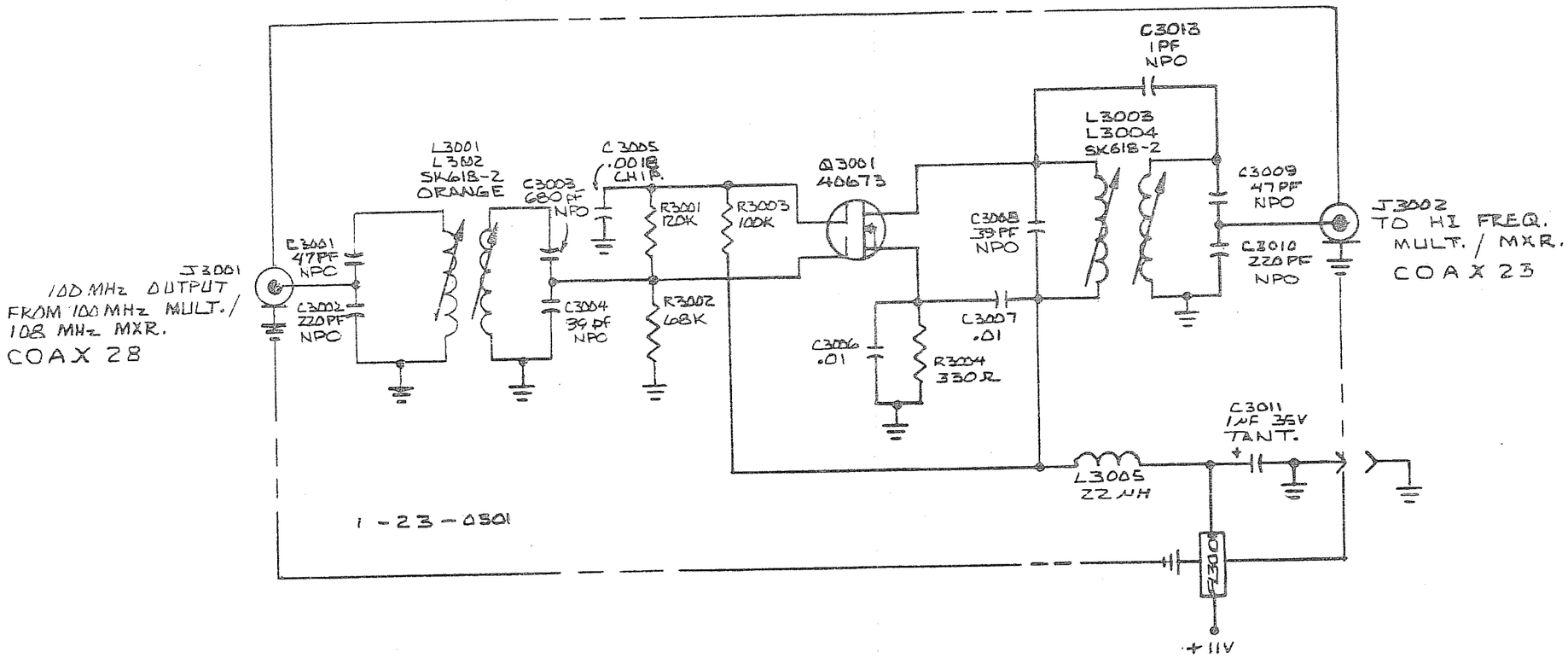

1-23-0301
ARTWORK

NEXT ASS'Y	QT'Y	MODEL	ITEM	REQ'D	PART NO.	DESCRIPTION
1-23-0303	—	FM-1000	-1	1	09-0300	SCHEMATIC

APPLICATION — LIST OF MATERIALS

TOLERANCES
UNLESS OTHERWISE SPECIFIED
ALL DIMENSIONS APPLY AFTER FINISH
DECIMALS: ± .005
ANGLES: ± 1/2°
FRACTIONS: ± 1/64
SURFACE ROUGHNESS 125
REMOVE ALL BURRS

DRAWN DATE 7-25-74
CHECKED DATE 7-25-74
APPROVED DATE 2-12-75

INSTRUMENT FLIGHT RESEARCH CORPORATION
WICHITA, KANSAS

TITLE
100 MHz FILTER SCHEMATIC
FM-1000

MATERIAL —
TREATMENT —
FINISH —

SIZE B | PART NUMBER 2-23-0300 | REV D
SCALE — | WEIGHT — | SHEET 1 OF 1

DATE	REV	CHANGE	APP'D
8-22-77	D	ORIGINAL RELEASE TJT	
1-18-78	G	INC ECN 2709 JAJ	WW

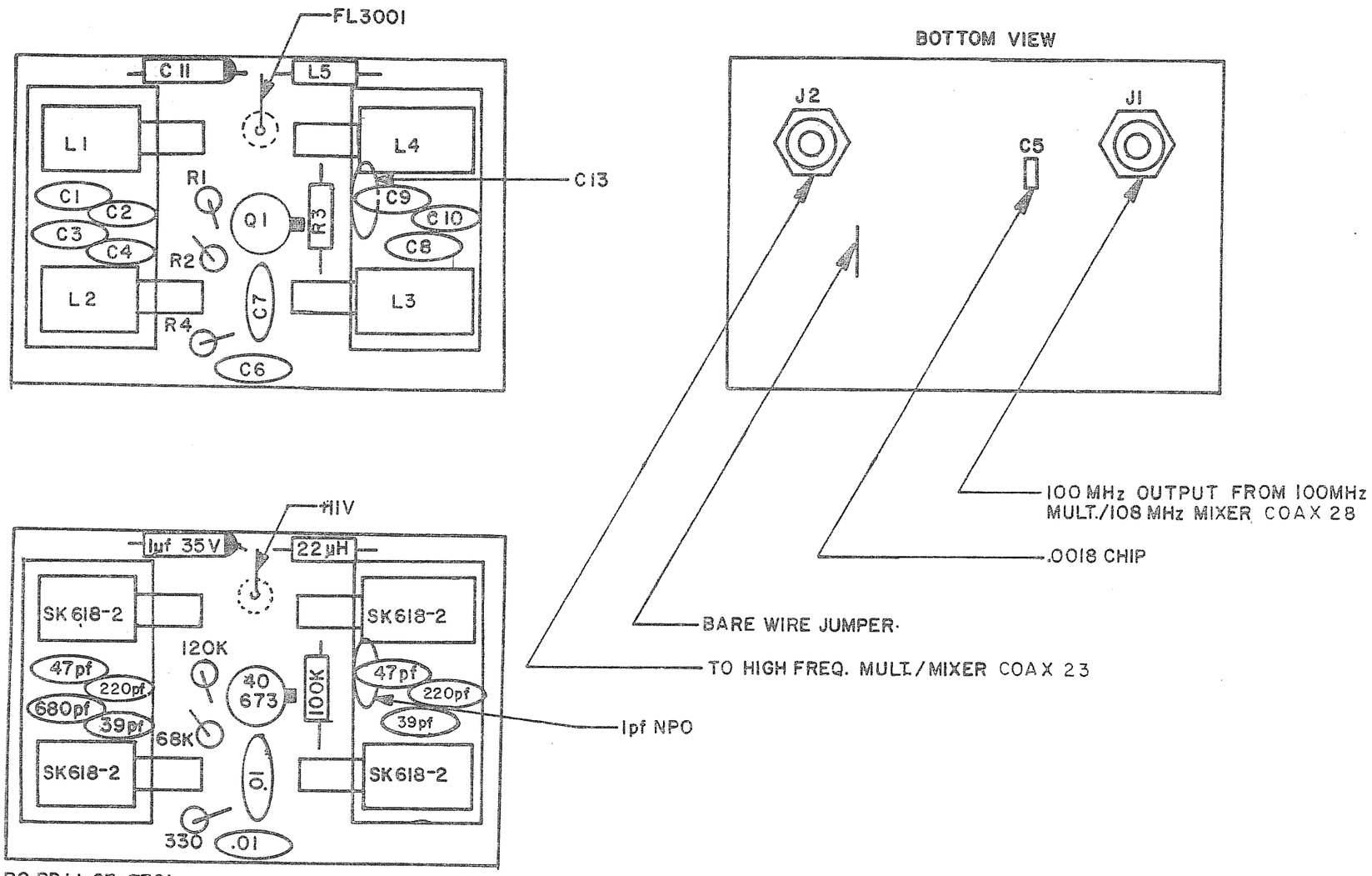

PC BD.: 1-23-0301
SCHEMATIC: 2-23-0300

NOTES:

1. ALL RESISTORS ARE 1/4 W., 10% TOLERANCE EXCEPT AS NOTED.
2. ALL CAPACITOR VALUES ARE IN µF EXCEPT AS NOTED, AND ARE NPO.
3. COMPONENT LEADS MAY EXTEND .04 TO .06 BEYOND BOTTOM OF BOARD AFTER SOLDERING.
4. MAXIMUM HEIGHT OF COMPONENTS TO BE .35 FROM COMPONENT SIDE OF BOARD.
5. PLACE CHIP CAPACITORS ON BACK SIDE OF BOARD.
6. ALL COMPONENT DESIGNATORS HAVE 300 PREFIX; i.e. R3001, Q3001, etc.

NEXT ASS'Y	QT'Y	MODEL	ITEM	REQ'D	PART NO.	DESCRIPTION
23-0591	1	FM/AM1000S				
23-0591	1	FM/AM1000A				

APPLICATION — LIST OF MATERIALS

TOLERANCES
UNLESS OTHERWISE SPECIFIED
ALL DIMENSIONS APPLY AFTER FINISH
DECIMALS: ± .005
ANGLES: ± 1/2°
FRACTIONS: ± 1/64
SURFACE ROUGHNESS 125
REMOVE ALL BURRS

DRAWN TJT DATE 8/22/77
CHECKED DATE
APPROVED DATE

INSTRUMENT FLIGHT RESEARCH CORPORATION
WICHITA, KANSAS

TITLE
100 MHz FILTER PC BOARD ASSEMBLY

MATERIAL
TREATMENT
FINISH

SIZE B | PART NUMBER 2-23-0303 | REV G
SCALE 2:1 | WEIGHT — | SHEET 1 OF 1

DATE	REV	CHANGE	APPD
11-13-74	A	INC ECN. # 1	MO
5-15-75	B	INC ECN 568 DLP/GLD	MW
7-2-75	C	INCORP ECN # 856 DLP	MW
9-8-75	D	INCORP ECN # 944	MW
12-15-75	E	INCORP ECN #1180	MW
2-15-76	F	INCORP ECN# 1340	MW
4-13-76	G	INCORP ECN#1423	MW
5-26-76	H	INCORP. ECN#1470 WW	MO
3/29/77	J	INCORPORATED ECN #1995	MW
1-4-78	K	INC. ECN 2620	MW

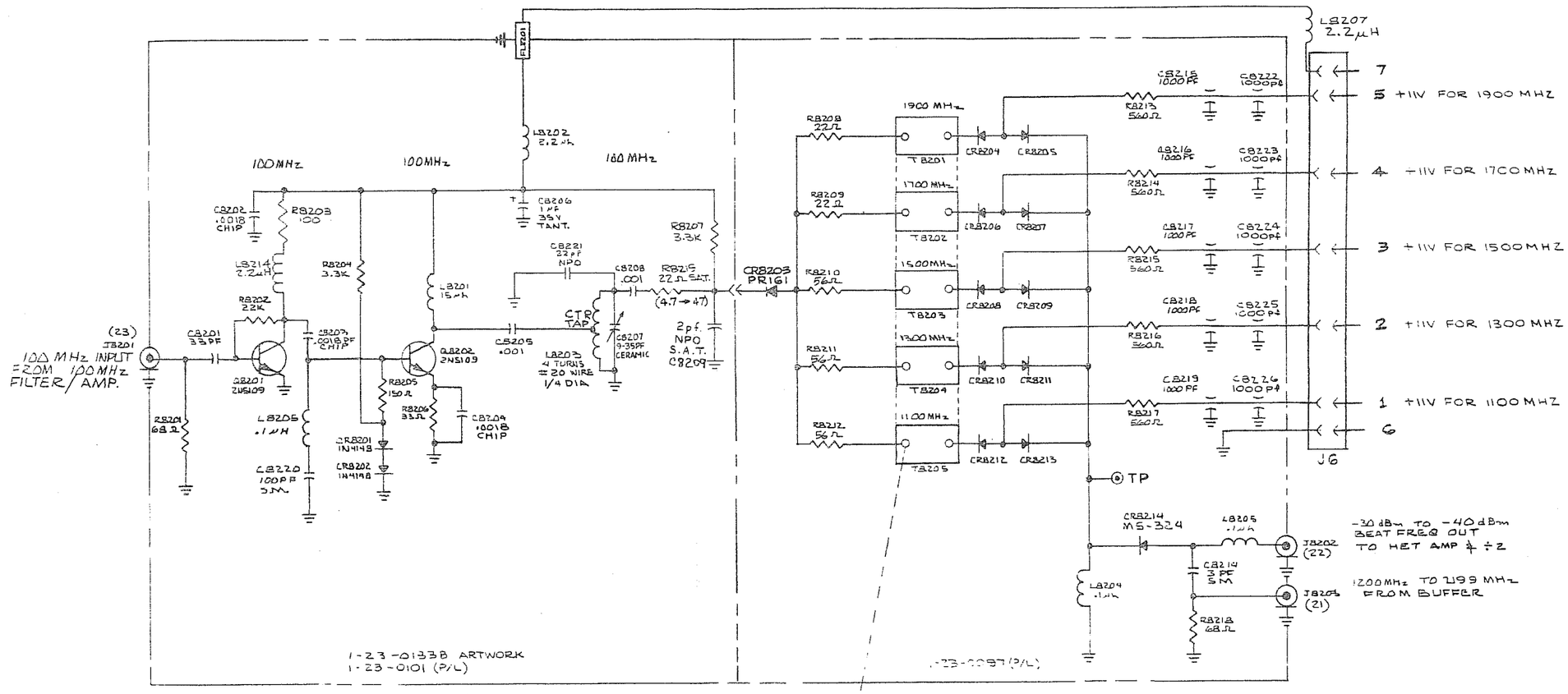

NOTE:
ALL UN MARKED DIODES ARE MA47047

LAST USED RB219
CB221
CB214
TB205
QB202
LB205

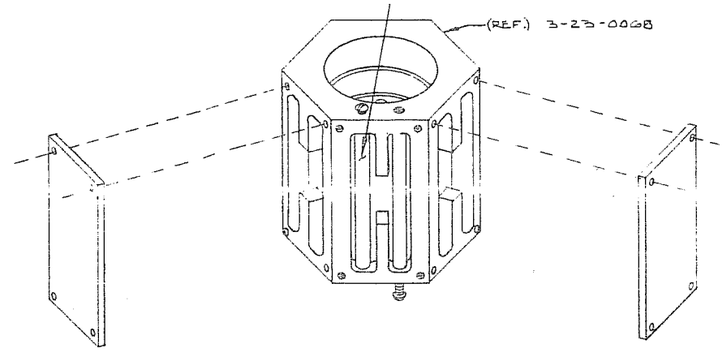

P/LIST 1-23-0097

NEXT ASS'Y	QTY	MODEL	ITEM	REQ'D	PART NO.	DESCRIPTION
23-0097	1	FM/AM 1000	—	—	23-0082	SCHEMATIC

APPLICATION — LIST OF MATERIALS

TOLERANCES
UNLESS OTHERWISE SPECIFIED
ALL DIMENSIONS APPLY AFTER FINISH
DECIMALS: .XX ± .010 .XXX ± .005
ANGLES: ± 1/2°
FRACTIONS: ± 1/64
SURFACE ROUGHNESS 125
REMOVE ALL BURRS

DRAWN 3-14-74
CHECKED
APPROVED

INSTRUMENT FLIGHT RESEARCH CORPORATION
WICHITA, KANSAS.

TITLE: HI-FREQ. MULT./MIXER. (SCHEMATIC)

MATERIAL —
TREATMENT —
FINISH —

SIZE C — PART NUMBER 3-23-0082 — REV K
SCALE — WEIGHT — SHEET 1 OF 1

DATE	REV	CHANGE	APP'D
9/21/69	A	INC ECN 2949 JAJ	WW
9/13/79	A	INC ECN 2949 JGF	WW

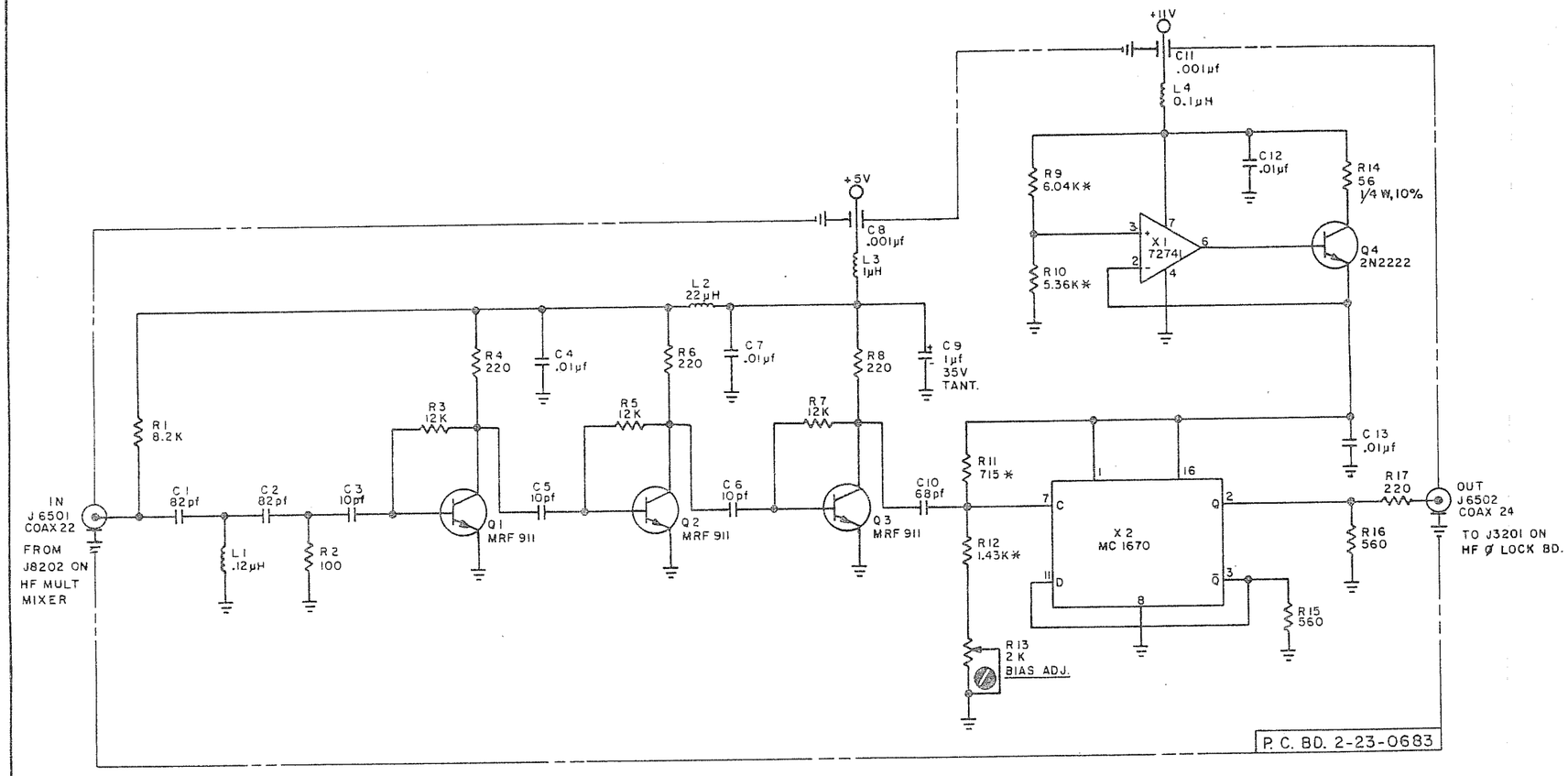

EFFECTIVE: FM/AM1000A S/N 1170 & ON

NOTES:

1. ALL RES. ARE 1/8W, 10% TOL. EXCEPT AS NOTED.
2. THOSE CAPACITORS CALLED OUT IN PF ARE NPOS
3. "*" DENOTES 1/4W, 1% TOL. RES.

3-23-0685 HET. AMP. ÷2 PRESCALER

HET. AMP.
÷2 PRESCALER

SIZE C | PART NUMBER 3-23-0685 | A

DATE	REV	CHANGE	APP'D

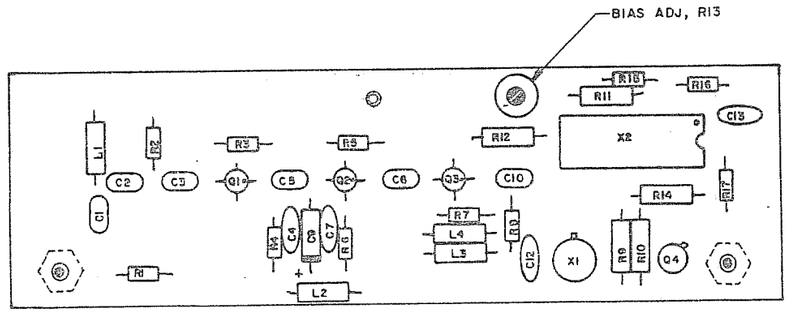

REF DWG:

PC BOARD 2-23-0683

SCHEMATIC 3-23-0685

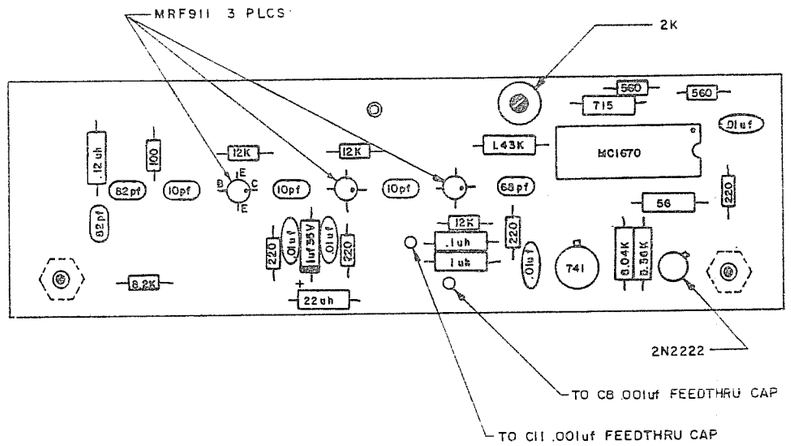

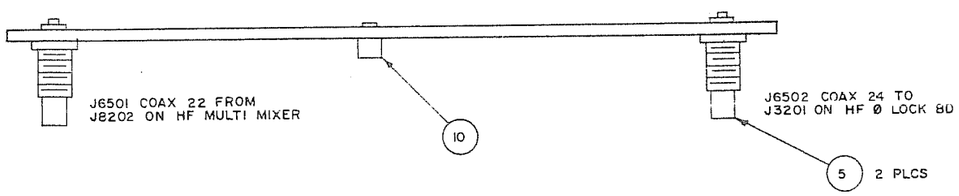

EFFECTIVE: 1000A S/N 1170 & ON

6. MAXIMUM HEIGHT OF COMPONENTS TO BE .35 FROM COMPONENT SIDE OF BOARD.
5. COMPONENT LEADS MAY EXTEND .04-.06 BEYOND BOTTOM OF BOARD AFTER SOLDERING
4. R9,10,11,12 ARE 1/4W, 1%
3. R14 IS 1/4W, 10%
2. R1 THRU R8, R15 THRU R17 ARE 1/8W, 10%
1. C1 – C3,5,6,10 ARE NPO CAPS

NOTES:

ITEM	REQ'D	PART NO.	DESCRIPTION
12			
11			
10	1	350-2188-09-07	STANDOFF "CAMBION"/EQUIV
9			
8	A/R	AWG 26	SLEEVING
7	A/R	AWG 26	BUSS WIRE
6			
5	2	17-0204-000	CONNECTOR "AEP"/EQUIV
4			
3	REF	3-23-0685	SCHEMATIC
2	1	2-23-0683	PC BOARD
1	1	1-23-0684	ASSY P/L

LIST OF MATERIALS

NEXT ASSY	QTY	MODEL
23-0225	1	

APPLICATION

TOLERANCES
UNLESS OTHERWISE SPECIFIED
ALL DIMENSIONS APPLY AFTER FINISH
DECIMALS: .XX = ± .010 .XXX = ± .005
ANGLES: ± 1/2°
FRACTIONS: ± 1/64
SURFACE ROUGHNESS 125
REMOVE ALL BURRS

DRAWN Jean Lane 4-14-78
CHECKED 4-27-78
APPROVED

-IFR INC-
WICHITA, KANSAS

TITLE HET AMP ÷ 2 PRESCALER PC ASSY

MATERIAL
FINISH

SIZE C | PART NUMBER 3-23-0684 | REV
SCALE 2 x 1 | WEIGHT | SHEET 1 OF 1

DATE	REV	CHANGE	APP'D
3/4/75	A	INCORPORATED ECN #664	MW
4/7/76	B	INCORP. ECN# 1378	MW
4/29/76	C	INCORP. ECN# 1432	MW
3/29/77	D	INCORP. ECN# 2000, 2003	MW
9/14/77	E	INCORP. ECN # 2279	MW
11/6/78	F	INC. ECN 2709	WD

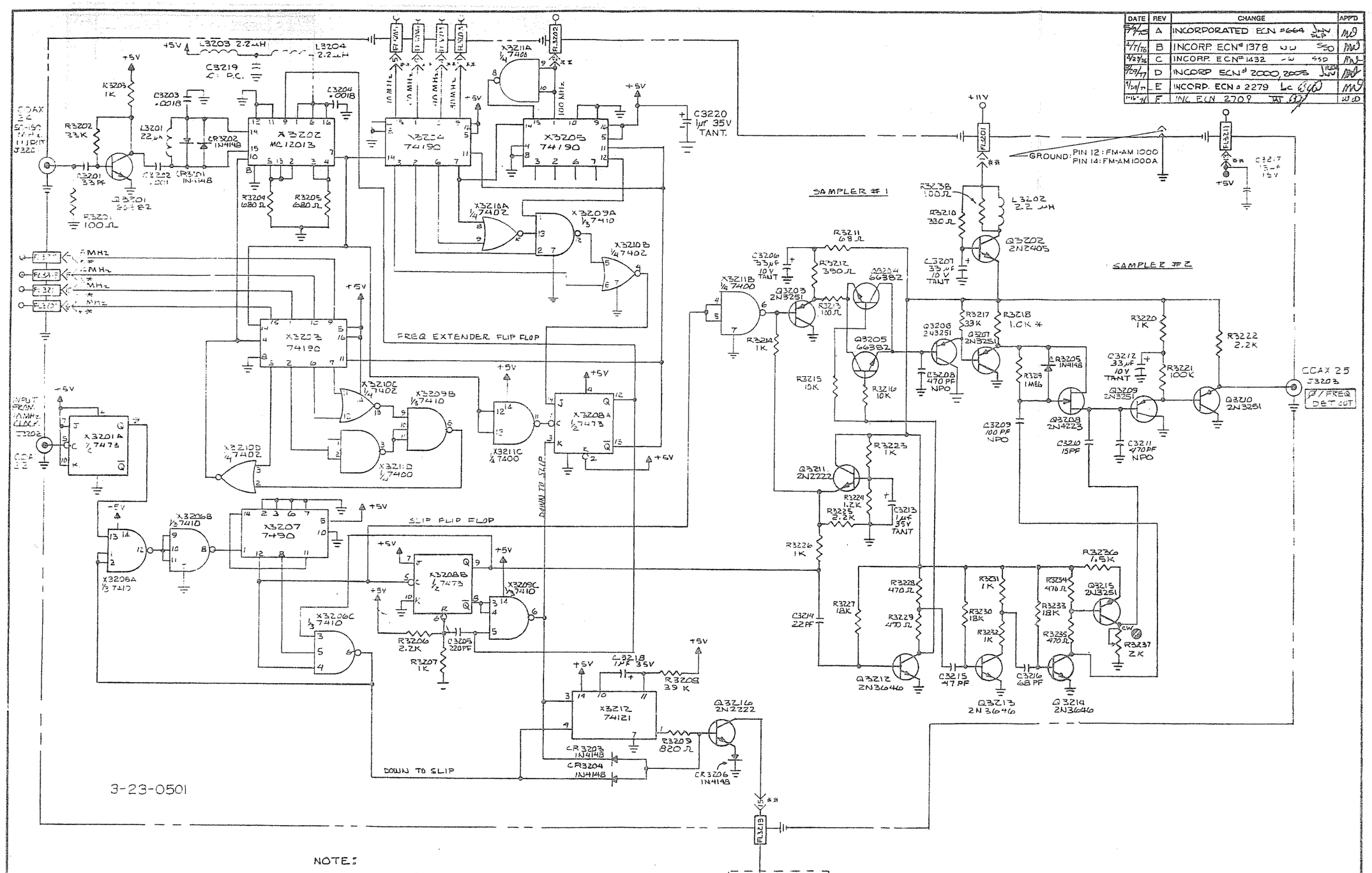

NOTE:

1. COMPONENTS MARKED * ARE 1%
2. CONNECTIONS MARKED** REFER TO FM-AM 1000A ONLY; FEED-THRU FILTERS APPEAR ON FM-AM 1000 ONLY
3. Q3209 (2N3231) WAS 2N5462 AND RESISTOR R3221 (100K) WAS 6.8K ON UNITS PRIOR TO SN 537.

23-0493	—	FM-AM1000A	1	—	3-23-0396	SCHEMATIC
NEXT ASSY	QTY	MODEL	ITEM	REQ'D	PART NO.	DESCRIPTION

APPLICATION | LIST OF MATERIALS

TOLERANCES
UNLESS OTHERWISE SPECIFIED
ALL DIMENSIONS APPLY AFTER FINISH
DECIMALS: .XX = ± .010 .XXX = ± .005
ANGLES: ± 1/2°
FRACTIONS: ± 1/64
SURFACE ROUGHNESS
REMOVE ALL BURRS

DRAWN LD 1-24-74
CHECKED DHS 2-1-74
APPROVED MW

INSTRUMENT FLIGHT RESEARCH CORPORATION
WICHITA, KANSAS.

TITLE: HIGH FREQ Ø LOCK CKT

MATERIAL —
TREATMENT —
FINISH —

SIZE C | PART NUMBER 3-23-0396 | REV F
SCALE NONE | WEIGHT — | SHEET 1 OF 1

DATE	REV	CHANGE	APP'D
[illegible]	D	INCORP. ECN # 2279 LC	[illegible]
[illegible]	D-1	[illegible]	

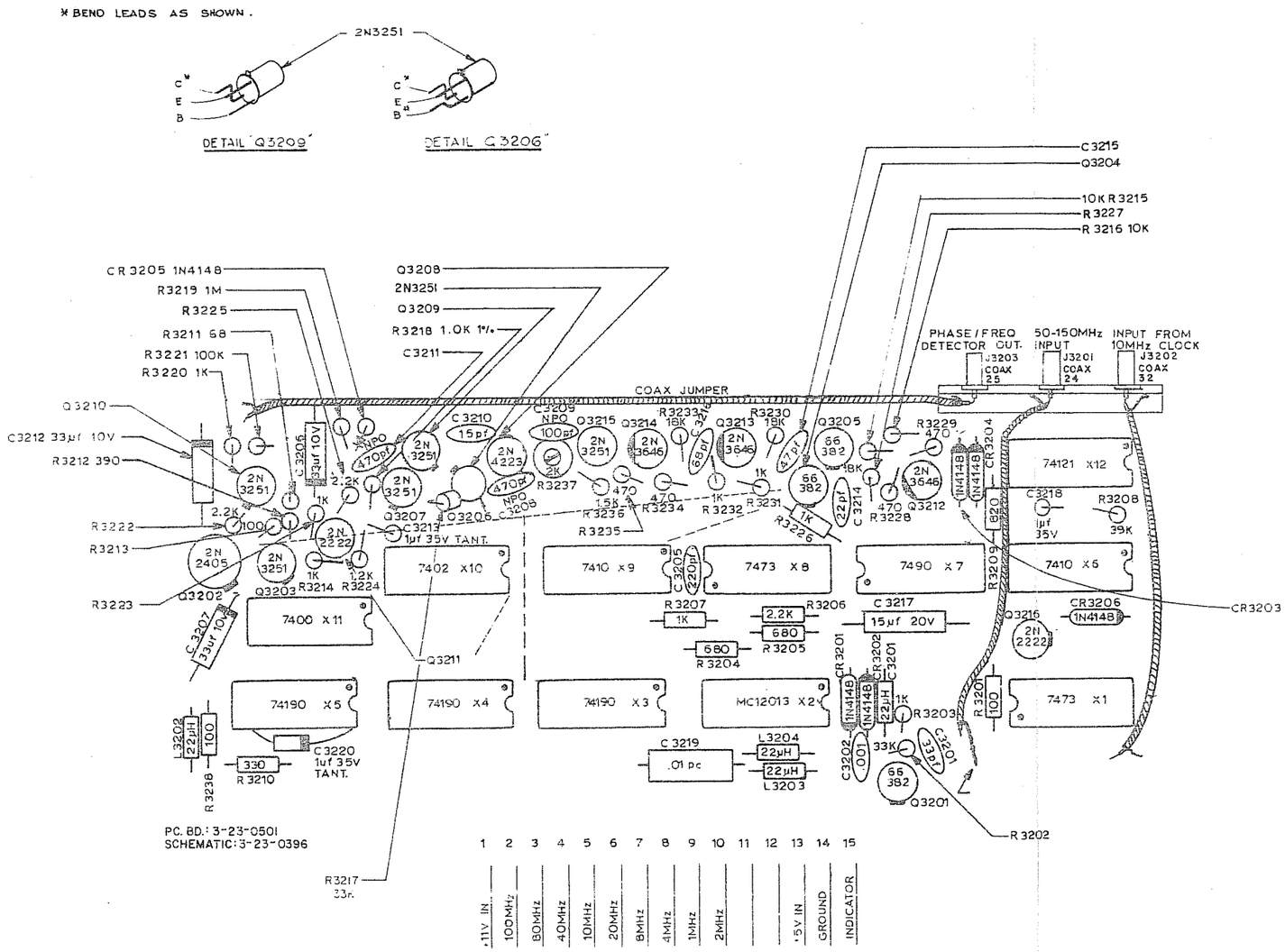

NOTES:

1. ALL RESISTORS ARE 1/4 W., 10% TOLERANCE EXCEPT AS NOTED.
2. ALL CAPACITOR VALUES ARE IN µF EXCEPT AS NOTED.
3. COMPONENT LEADS MAY EXTEND .04 TO .06 BEYOND BOTTOM OF BOARD AFTER SOLDERING.
4. MAXIMUM HEIGHT OF COMPONENTS TO BE .35 FROM COMPONENT SIDE OF BOARD.

ITEM	REQ'D	PART NO.	DESCRIPTION

LIST OF MATERIALS

23-0592	1	XT ASSY	QTY
23-0592	1	1600A	MODEL

APPLICATION

TOLERANCES
UNLESS OTHERWISE SPECIFIED
ALL DIMENSIONS APPLY AFTER FINISH
DECIMALS: .xx = ± .010 .xxx = ± .005
ANGLES: ± 1/2°
FRACTIONS: ± 1/64
SURFACE ROUGHNESS 125
REMOVE ALL BURRS

MATERIAL
FINISH

DRAWN TJT DATE 8-18-77
CHECKED DATE
APPROVED DATE

-IFR INC-
WICHITA, KANSAS

TITLE
HIGH FREQUENCY Ø LOCK
PC BOARD ASSEMBLY

SIZE 3 | PART NUMBER 3-23-0493 | REV
SCALE 2:1 | WEIGHT | SHEET 1 OF 1

DATE	REV	CHANGE

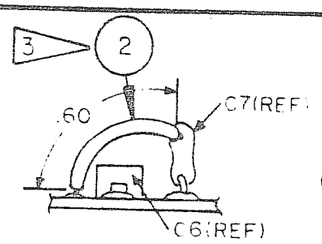

DETAIL A
(NOT TO SCALE)

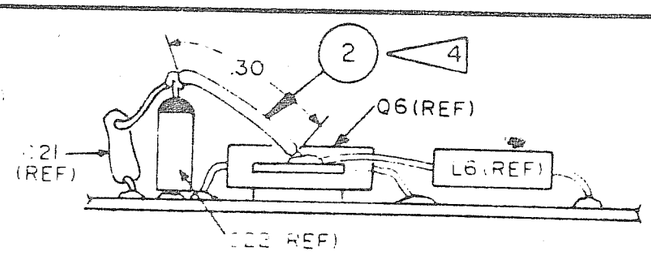

DETAIL B (NOT TO SCALE)

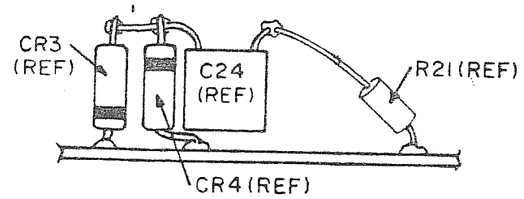

DETAIL C (NOT TO SCALE)

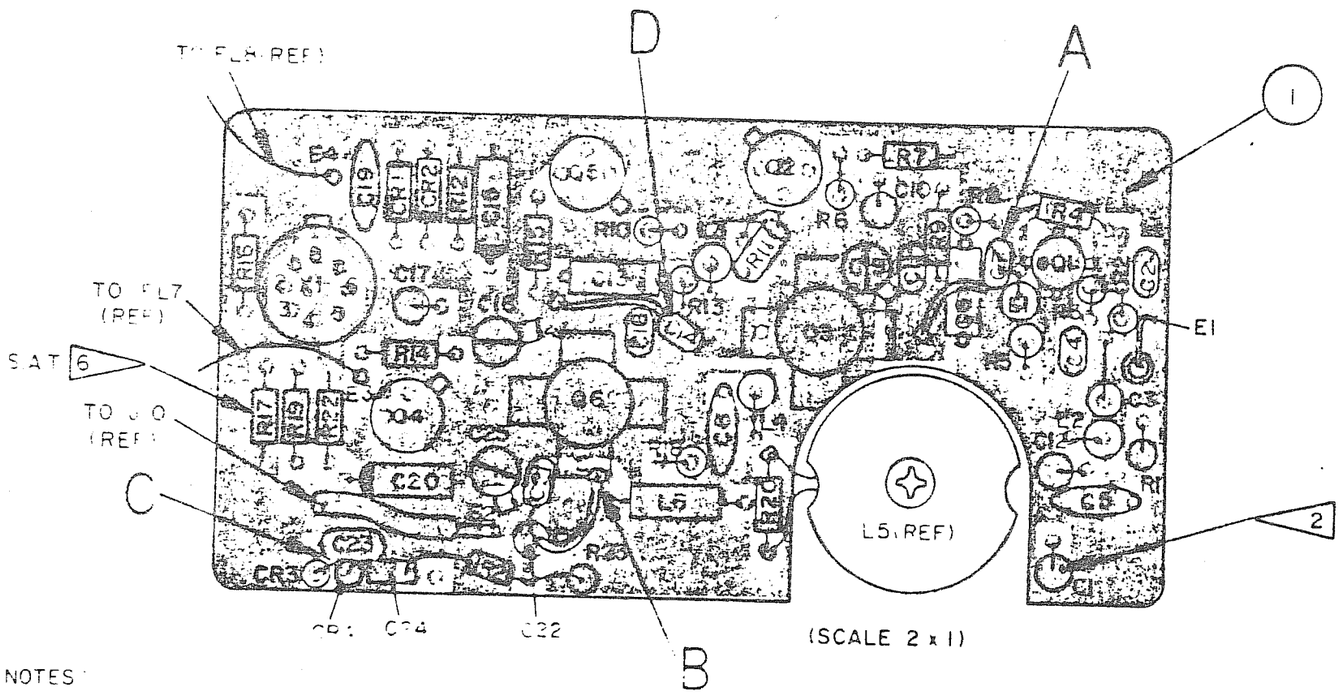

(SCALE 2 x 1)

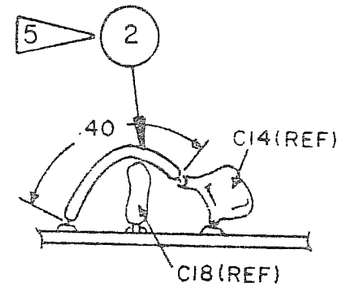

DETAIL D
(NOT TO SCALE)

NOTES:

1. REFERENCE FULL SCHEMATIC [illegible]

2. ALL TANT CAPS MOUNTED VERTICALLY ARE POSITIVE END UP

3. USE TEFLON SLEEVE # 050-0000-115) .06 LONG ON C7 LEAD TO ASSURE SAME LEAD LENGTH ON EVERY INSTALLATION.

4. USE TEFLON SLEEVE (#050-0000-115) .30 LONG FROM +C22 LEAD TO COLLECTOR OF Q6 TO ASSURE SAME LEAD LENGTH ON EVERY INSTALLATION.

5. USE TEFLON SLEEVE # 050-0000-115) .40 LONG ON C14 LEAD TO ASSURE SAME LEAD LENGTH ON EVERY INSTALLATION.

6. R17 SET AT TEST (SAT RANGE. NOMINAL ~~39K~~; ~~RANGE: 39K~~ OR 33K.

7. ALL P.C. BOARD COMPONENTS CARRY AN 80000 SERIES REFERENCE DESIGNATOR (E.G. Q5 IS Q80005 AND R22 IS R80022).

ITEM	REQ'D	PART NO	DESCRIPTION

LIST OF MATERIALS

1000S	MODEL	
1	QTY	
23-725	NEXT ASSY	
	APPLICATION	

TOLERANCES
UNLESS OTHERWISE SPECIFIED
ALL DIMENSIONS APPLY AFTER FINISH
DECIMALS .XX ± .010 .XXX ± .005
ANGLES ± 1.2°
FRACTIONS ± 1/64
SURFACE ROUGHNESS 125
REMOVE ALL BURRS

DRAWN ER 4/25/80 DATE
CHECKED J. Adams 11-6-80 DATE
APPROVED Bonura 11/6/80 DATE

MATERIAL —
FINISH —

-IFR INC-
WICHITA KANSAS

TITLE HIGH LEVEL AMP P.C. BD #1 ASSY.
FM-AM 1000S

SIZE B
PART NUMBER 7010-2372-100
SCALE NOTED
WEIGHT —
SHEET 1 OF 1

DATE	REV	CHANGE	APP'D

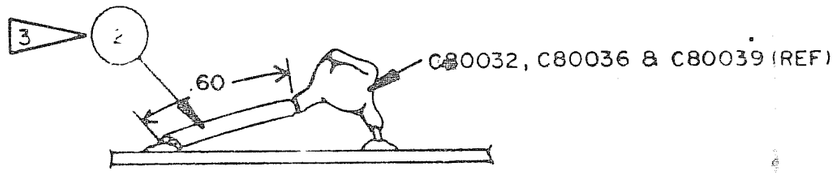

DETAIL A (NOT TO SCALE)

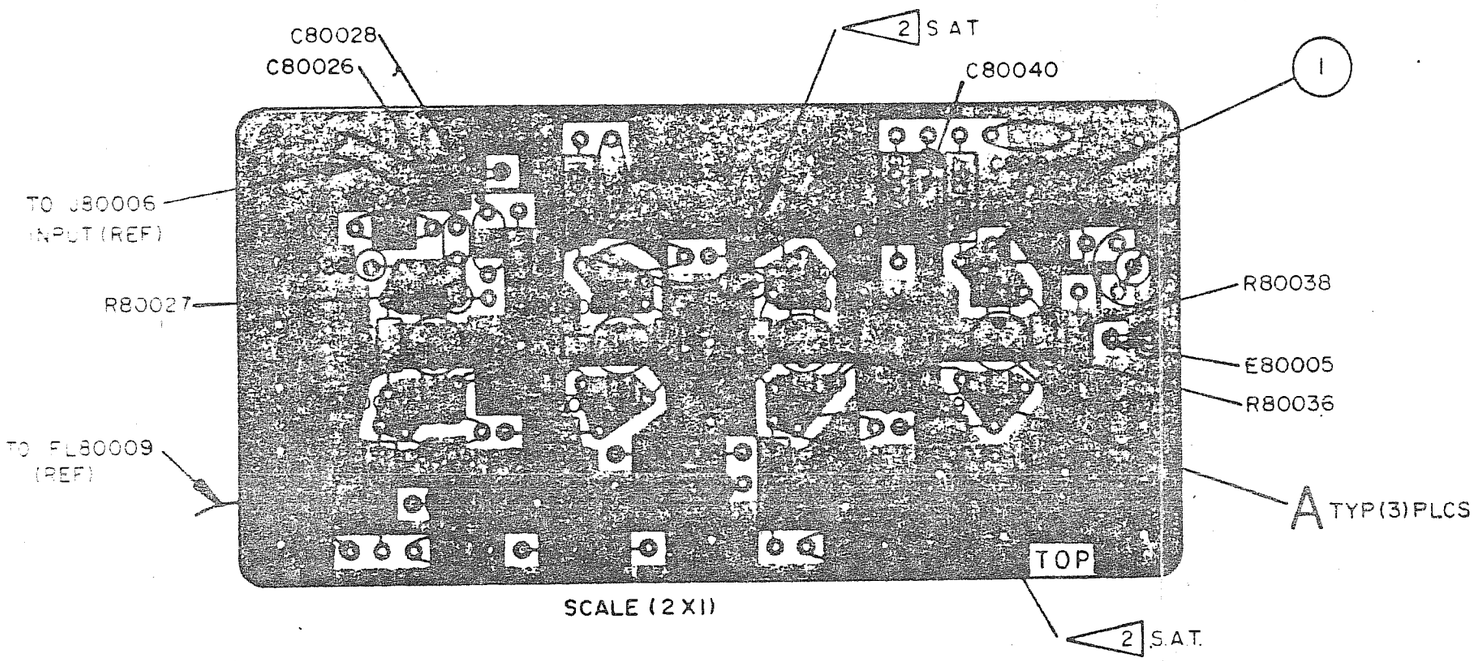

SCALE (2 X 1)

NOTES:

1. REFERENCE CIRCUIT SCHEMATIC 0000-2371-800.
2. R80032 AND R80035 ARE SET AT TEST (S.A.T.) RESISTORS NOMINAL VALUE 3.9KΩ. S.A.T. RANGE: 1.5K TO 3.9K, 1/8W, 10%.
3. USE 26AWG TEFLON SLEEVING (# 1050-0000-115) .60 LONG ON ONE LEAD OF C80032, C80036 & C80039 TO ASSURE SAME LEAD LENGTH ON EVERY INSTALLATION.

ITEM	REQ'D	PART NO	DESCRIPTION

LIST OF MATERIALS

MODEL	QTY	NEXT ASSY
1000S	1	23-725

APPLICATION

TOLERANCES
UNLESS OTHERWISE SPECIFIED
ALL DIMENSIONS APPLY AFTER FINISH
DECIMALS .xx ± .010 .xxx ± .005
ANGLES ± 1/2°
FRACTIONS ± 1/64
SURFACE ROUGHNESS 125
REMOVE ALL BURRS

DRAWN	DATE
ER	4/23/80
CHECKED	DATE
J. Adams	11-6-80
APPROVED	DATE
Borota	

MATERIAL //
FINISH //

-IFR INC-
WICHITA, KANSAS

TITLE
HIGH LEVEL AMP P.C. BD. # 2 ASSY.
FM-AM 1000S

SIZE	PART NUMBER	REV
B	7010-2372-400	

SCALE NONE | WEIGHT // | SHEET 1 OF 1

DATE	REV	CHANGE	
5/14/5	A	INC ECN 633	
6/12/5	B	INC ECN 800	
10-17-75	C	INCORP ECN #1000	
12-23-75	D	INCORP ECN #1145	
4-13-76	E	INC. ECN #1424 & 1385	
7-22-76	F	INC ECN #1569 RKK	
7-19-77	G	INCORP ECN # 2012, 1991	
8/16/77	H	INC ECN # 2048 T.T	
12-30-77	J	INC ECN 2647	
1-17-79	K	INC ECN 3709	

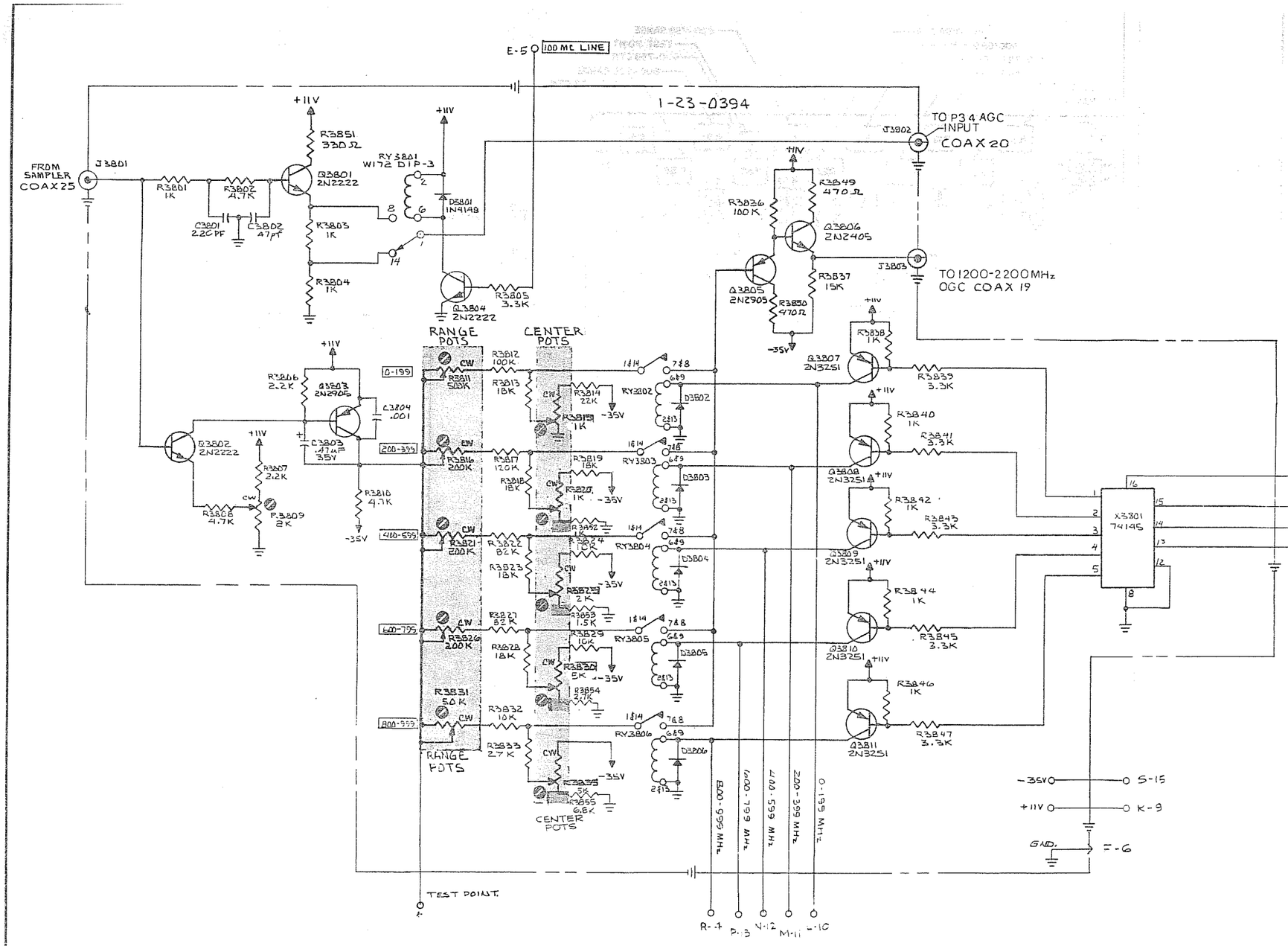

NOTE:
1. ALL UN MARKED RELAYS ARE W117 DIP-3
2. ALL UNMARKED DIODES ARE IN4148

ARTWORK 2-23-0041B } EFFECTIVE
PARTS LIST -23-0050 } S/N 1 THRU 29
ARTWORK 2-23-0394 } EFFECTIVE
PARTS LIST 1-23-0423 } S/N 30 & UP

NEXT ASS'Y	QT'Y	MODEL	ITEM	REQ'D	PART NO.	DESCRIPTION
23-0423	1	FM/AM-1000	—	—	23-0038	SCHEMATIC

APPLICATION — LIST OF MATERIALS

TOLERANCES
UNLESS OTHERWISE SPECIFIED
ALL DIMENSIONS APPLY AFTER FINISH
DECIMALS: .xx = ± .010 .xxx = ± .005
ANGLES: ± 1/2°
FRACTIONS: ± 1/64
SURFACE ROUGHNESS 125
REMOVE ALL BURRS

DRAWN LD DATE 1-30-79
CHECKED DATE
APPROVED MD DATE 5-15-79

INSTRUMENT FLIGHT RESEARCH CORPORATION
WICHITA, KANSAS

TITLE V.C.O. TUNER FM-1000

MATERIAL —
TREATMENT —
FINISH —

SIZE 3 | PART NUMBER 3-23-0038 | REV K
SCALE | WEIGHT | SHEET OF

DATE	REV	CHANGE	APP'D
8/19/77	E	ORIGINAL RELEASE AA	
8/31/77	F	INC ECN 2647 JAS	
1/26/78	F-1	INC ECN 2709 JAJ	

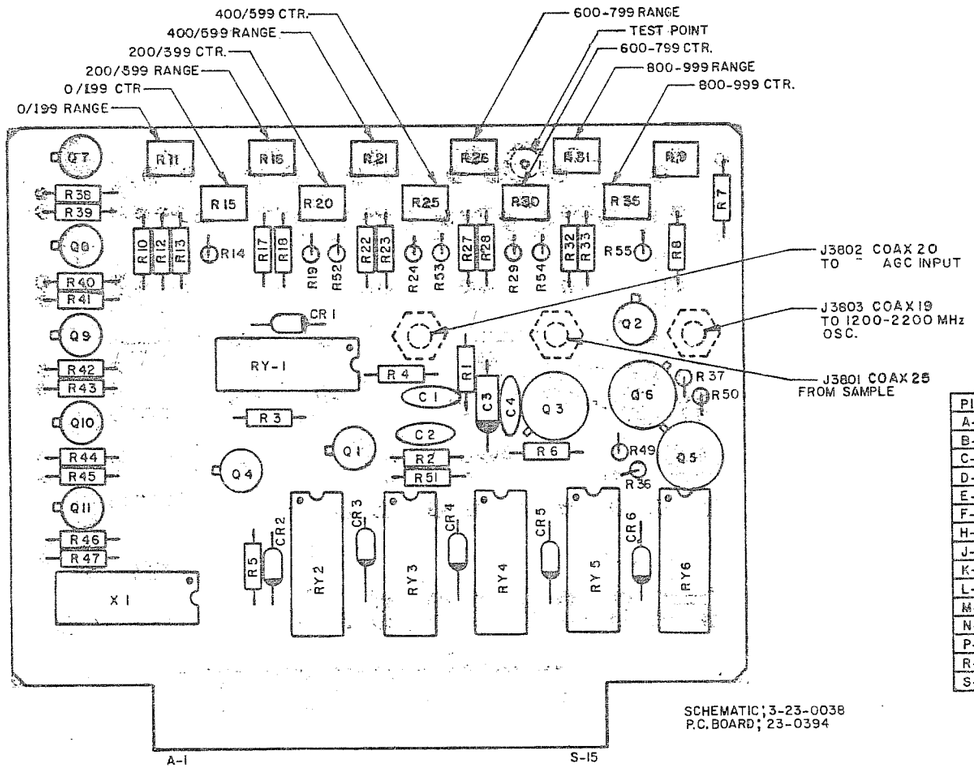

SCHEMATIC; 3-23-0038
P.C. BOARD; 23-0394

PIN	FUNCTION
A-1	800 MC LINE
B-2	400 MC LINE
C-3	200 MC LINE
D-4	+5V
E-5	100 MC LINE
F-6	GROUND
H-7	NO CONNECTION
J-8	NO CONNECTION
K-9	+11V
L-10	0-199 MHz
M-11	200-399 MHz
N-12	400-599 MHz
P-13	600-799 MHz
R-14	800-999 MHz
S-15	-35V

NOTES:

1. ALL RESISTORS ARE 1/4 W., 10% TOLERANCE EXCEPT AS NOTED.
2. ALL CAPACITOR VALUES ARE IN μF EXCEPT AS NOTED.
3. COMPONENT LEADS MAY EXTEND .04 TO .06 BEYOND BOTTOM OF BOARD AFTER SOLDERING.
4. MAXIMUM HEIGHT OF COMPONENTS TO BE .35 FROM COMPONENT SIDE OF BOARD.

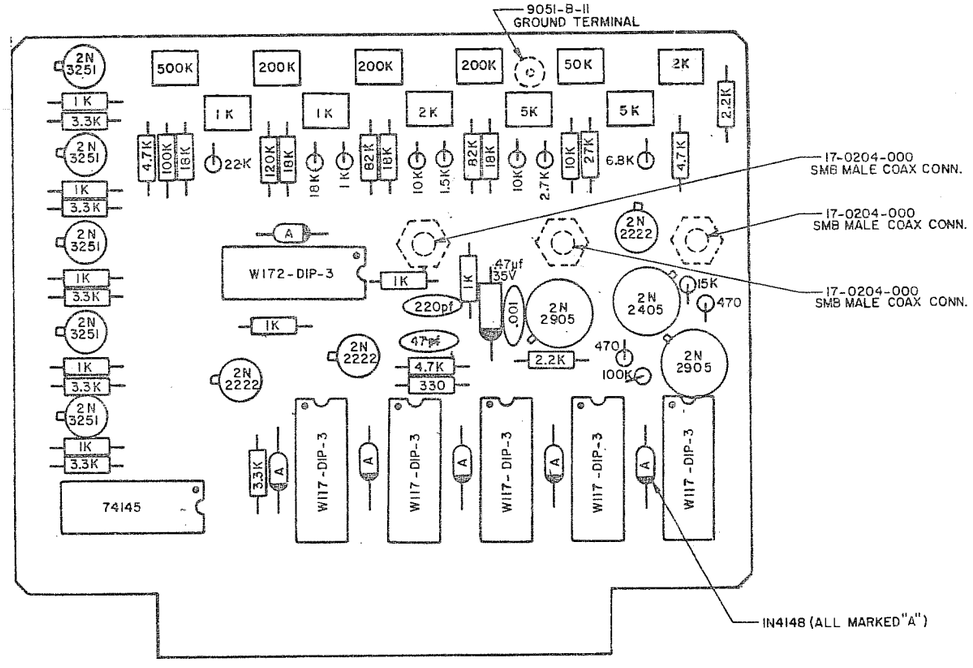

ITEM	REQ'D	PART NO.	DESCRIPTION
	1	1-23-0423	P.C. BOARD ASS'Y

LIST OF MATERIALS

NEXT ASSY	QTY	MODEL
1-23-0562	1	1662A

APPLICATION

TOLERANCES
UNLESS OTHERWISE SPECIFIED
ALL DIMENSIONS APPLY AFTER FINISH
DECIMALS: .xx = ± .010 .xxx = ± .005
ANGLES: ± 1/2°
FRACTIONS: ± 1/64
SURFACE ROUGHNESS 125
REMOVE ALL BURRS

DRAWN Archer DATE 8/19/77
CHECKED DATE 8/23/77
APPROVED DATE 8/24/77

-IFR INC-
WICHITA, KANSAS

TITLE
V.C.O. TUNER
P.C. BOARD
ASS'Y

MATERIAL
FINISH

SIZE	PART NUMBER	REV
C	3-23-0423	F-1
SCALE 2:1	WEIGHT	SHEET 1 OF 1

Figure 6-58

DATE	REV	CHANGE	APP'D
8-19-76	A	INC ECN #1 L.D.	MJ
12-20-76	B	INC ECN # 1205	MJ
5/25/77	C	INCORP ECN # 1467 WW	MJ
8-4-77	D	INCORP ECN #1626 JNV	MJ
2/20/77	E	INCORP ECN # 2541 AA	WW
11-16-77	G	UPDATED REV TO BALANCE WITH P/N INC 2709 JAT	

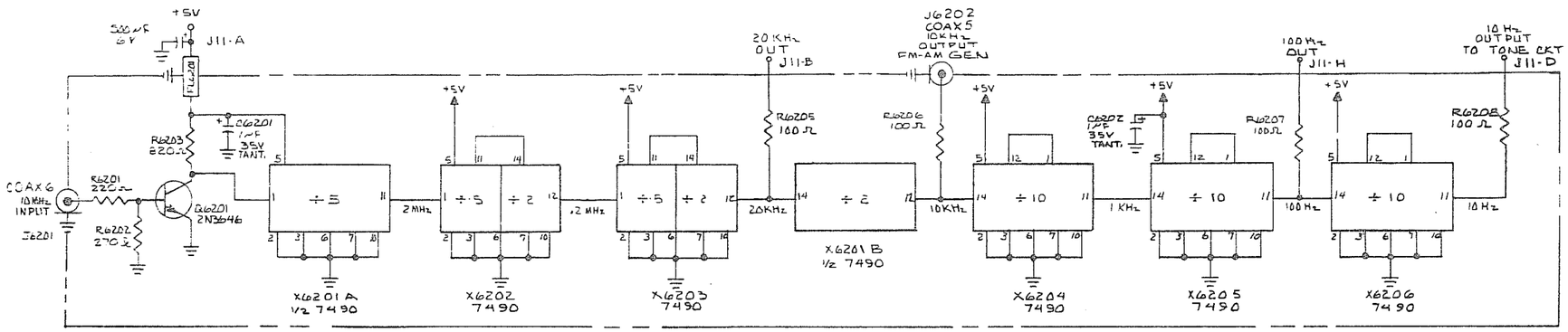

NEXT ASS'Y	QTY	MODEL	ITEM	REQ'D	PART NO.	DESCRIPTION
23-0093	1	FM-AM-1000	—	—	23-0062	SCHEMATIC

APPLICATION — LIST OF MATERIALS

TOLERANCES
UNLESS OTHERWISE SPECIFIED
ALL DIMENSIONS APPLY AFTER FINISH
DECIMALS: .XX = ± .010 .XXX = ± .005
ANGLES: ± 1/2°
FRACTIONS: ± 1/64
SURFACE ROUGHNESS 125 ✓
REMOVE ALL BURRS

DRAWN JS 2-28-77
CHECKED WS 2-28-77
APPROVED MJ 12-31-75

INSTRUMENT FLIGHT RESEARCH CORPORATION
WICHITA, KANSAS.

TITLE CLOCK DIVIDER

MATERIAL —
TREATMENT —
FINISH —

SIZE C — PART NUMBER 3-23-0062 — REV G
SCALE — WEIGHT — SHEET 1 OF 1

DATE	REV	CHANGE	APP'D
10-21-77	G	ORIGINAL RELEASE TJT	
1-18-78	G-1	INC ECN 2709 JAJ	

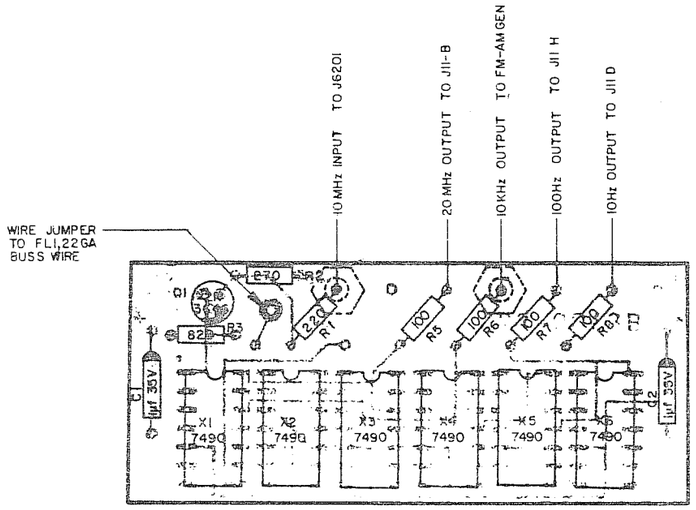

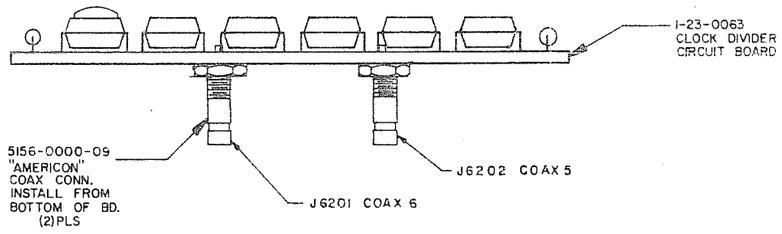

NOTES:

4. SCHEMATIC NO 3-23-0062
3. MAXIMUM HEIGHT OF COMPONENTS TO BE .03 FROM COMPONENT SIDE OF BOARD.
2. COMPONENT LEADS MAY EXTEND .04 TO .06 BEYOND BOTTOM OF BOARD AFTER SOLDERING.
1. ALL RES. ARE 1/4W, 10%TOL.

ITEM	REQ'D	PART NO.	DESCRIPTION

LIST OF MATERIALS

FSCM/AB 15005A/B	QTY	MODEL
23-0217	1	
NEXT ASS'Y		APPLICATION

TOLERANCES
UNLESS OTHERWISE SPECIFIED
ALL DIMENSIONS APPLY AFTER FINISH
DECIMALS: .XX = ± .010 .XXX = ± .005
ANGLES: ± 1/2°
FRACTIONS: ± 1/64
SURFACE ROUGHNESS 125
REMOVE ALL BURRS

DRAWN Ten Eyck DATE 10-21-77
CHECKED DATE
APPROVED DATE 11-77

-IFR INC-
WICHITA, KANSAS

TITLE
CLOCK DIVIDER
PC BOARD
ASSEMBLY

MATERIAL
FINISH

SIZE C | PART NUMBER 3-23-0093 | REV G-1
SCALE 2:1 | WEIGHT — | SHEET 1 OF 1

DATE	REV	CHANGE	APPD
2-19-75	A	INC ECN 1197	
1-30-76	B	INC ECN 1239 & 1267	
4-14-77	C	INC ECN 1791 RKK	
5-10-77	D	INC ECN 2003 TJT	
9-16-77	E	INCORP ECN # 2346	
1-5-78	F	INC ECN 2709	
7-7-78	G	INC ECN 2801	

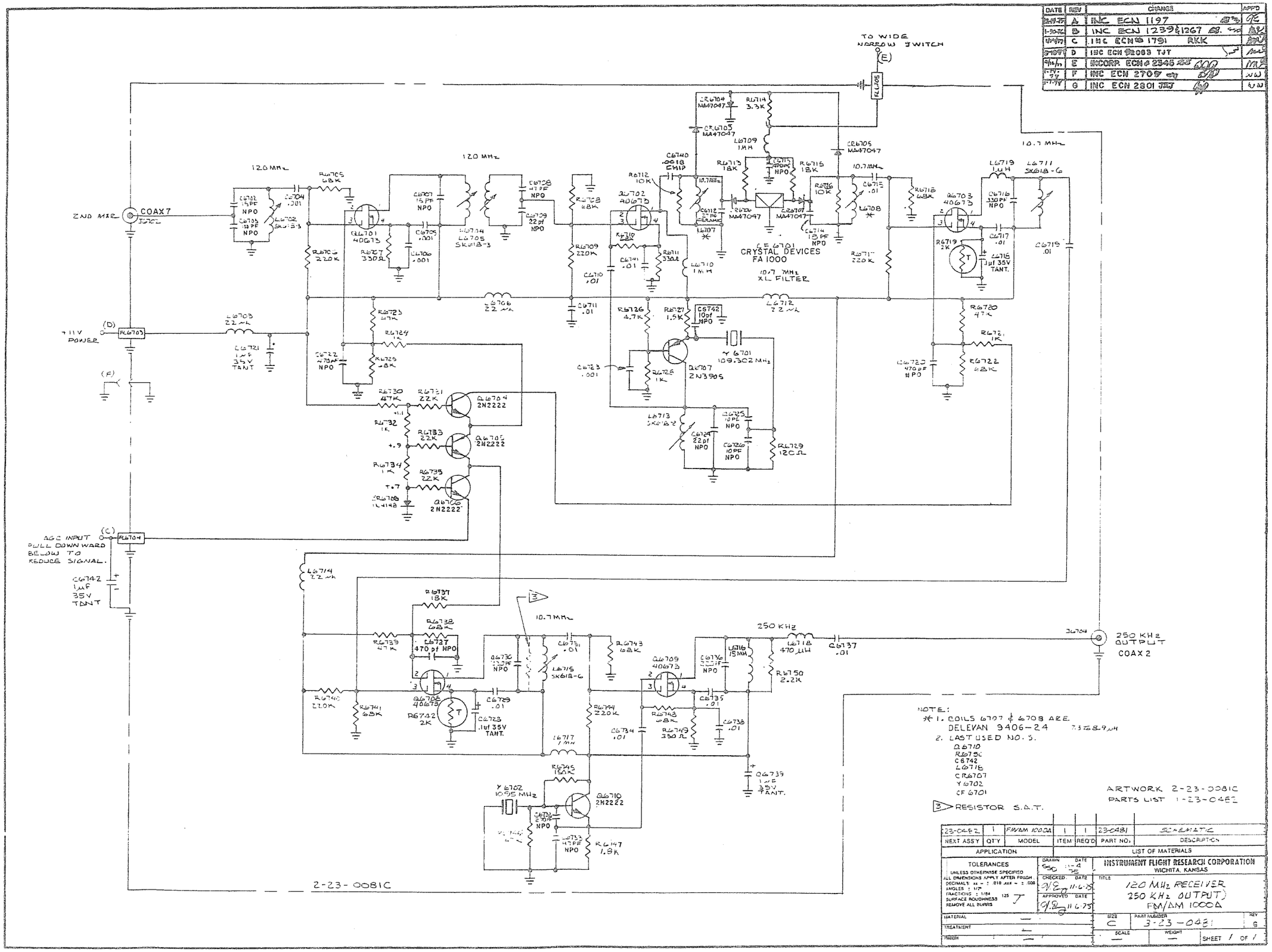

NOTE:

* 1. COILS 6707 & 6708 ARE DELEVAN 9406-24 3.3 to 8.9 μH

2. LAST USED NO. S.
   - Q6710
   - R6750
   - C6742
   - L6718
   - CR6707
   - Y6702
   - CF6701

3 RESISTOR S.A.T.

ARTWORK 2-23-0081C
PARTS LIST 1-23-0482

NEXT ASS'Y	QTY	MODEL	ITEM	REQ'D	PART NO.	DESCRIPTION
23-0482	1	FM/AM 1000A	1	1	23-0481	SCHEMATIC

APPLICATION — LIST OF MATERIALS

TOLERANCES: UNLESS OTHERWISE SPECIFIED ALL DIMENSIONS APPLY AFTER FINISH. DECIMALS: .XX ± .010, .XXX ± .005. ANGLES ± 1/2°. FRACTIONS ± 1/64. SURFACE ROUGHNESS 125. REMOVE ALL BURRS.

DRAWN: SSC DATE 11-4-75
CHECKED: DATE 11-6-75
APPROVED: DATE 11-6-75

INSTRUMENT FLIGHT RESEARCH CORPORATION
WICHITA, KANSAS

TITLE: 120 MHz RECEIVER 250 KHz OUTPUT FM/AM 1000A

MATERIAL —
TREATMENT —
FINISH —

SIZE C — PART NUMBER 3-23-0481 — REV G
SCALE — WEIGHT — SHEET 1 OF 1

2-23-0081C

DATE	REV	CHANGE	APP'D
9-1-77	D	ORIGINAL RELEASE TJT	
1/[illegible]/78	E	INC ECN [illegible]	
1-6-77	E	ADDED CONN. DES. & COAX NOS. TO CONNECTORS. TenEyck	
3-1-78	F	INC ECN 2824, 2801, 2870	
5-5-78	G	INC. ECN 2954 & 2999 TenEyck	

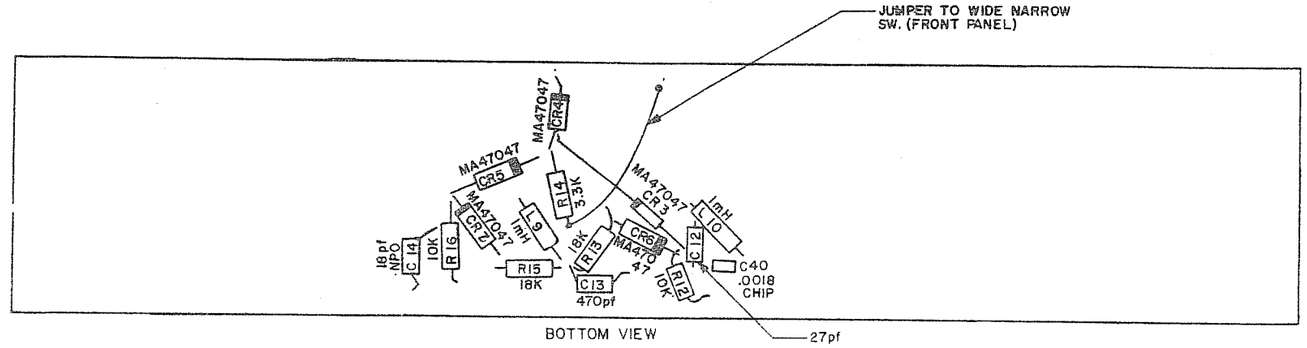

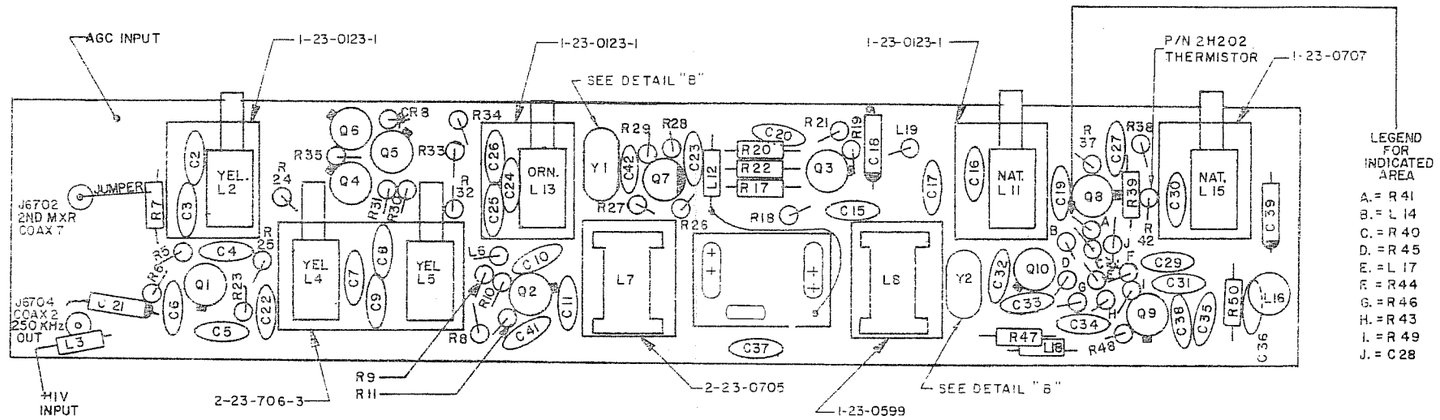

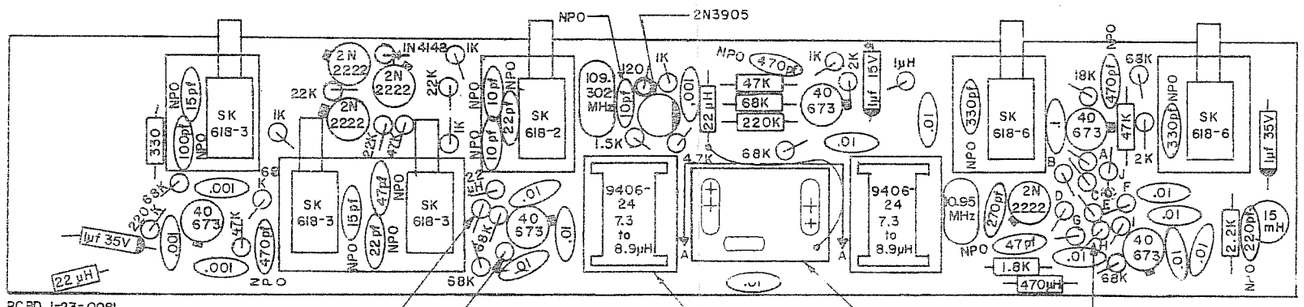

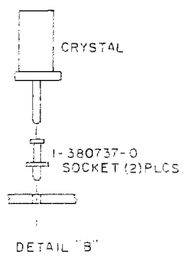

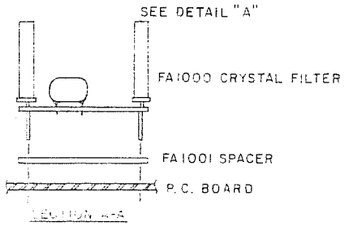

NOTES:

1. ALL RESISTORS ARE 1/4 W., 10% TOLERANCE EXCEPT AS NOTED.
2. ALL CAPACITOR VALUES ARE IN μF EXCEPT AS NOTED.
3. COMPONENT LEADS MAY EXTEND .04 TO .06 BEYOND BOTTOM OF BOARD AFTER SOLDERING.
4. MAXIMUM HEIGHT OF COMPONENTS TO BE .65 FROM COMPONENT SIDE OF BOARD AND .11 FROM BOTTOM SIDE OF BOARD.
5. PLACE CHIP CAPACITORS ON BACK SIDE OF BOARD.
6. ALL COMPONENT DESIGNATORS HAVE 67 PREFIX; i.e. R6701, Q6701 etc.

ITEM	REQ'D	PART NO	DESCRIPTION

PART NUMBER	QTY	MODEL
23-0483	1	FM/AM 1000
23-0483	1	

NEXT ASSY / APPLICATION

TOLERANCES
UNLESS OTHERWISE SPECIFIED
ALL DIMENSIONS APPLY AFTER FINISH
DECIMALS: .XX ± .010 .XXX ± .005
ANGLES: ± 1/2°
FRACTIONS: ± 1/64
SURFACE ROUGHNESS 125
REMOVE ALL BURRS

DRAWN TJT DATE 9/28/77
CHECKED DATE
APPROVED DATE

MATERIAL
FINISH

- IFR INC -
WICHITA, KANSAS

TITLE
120MHz RECEIVER
PC BOARD ASSEMBLY

SIZE C | PART NUMBER 3-23-0482 | REV G
SCALE 2:1 | WEIGHT | SHEET 1 OF 1

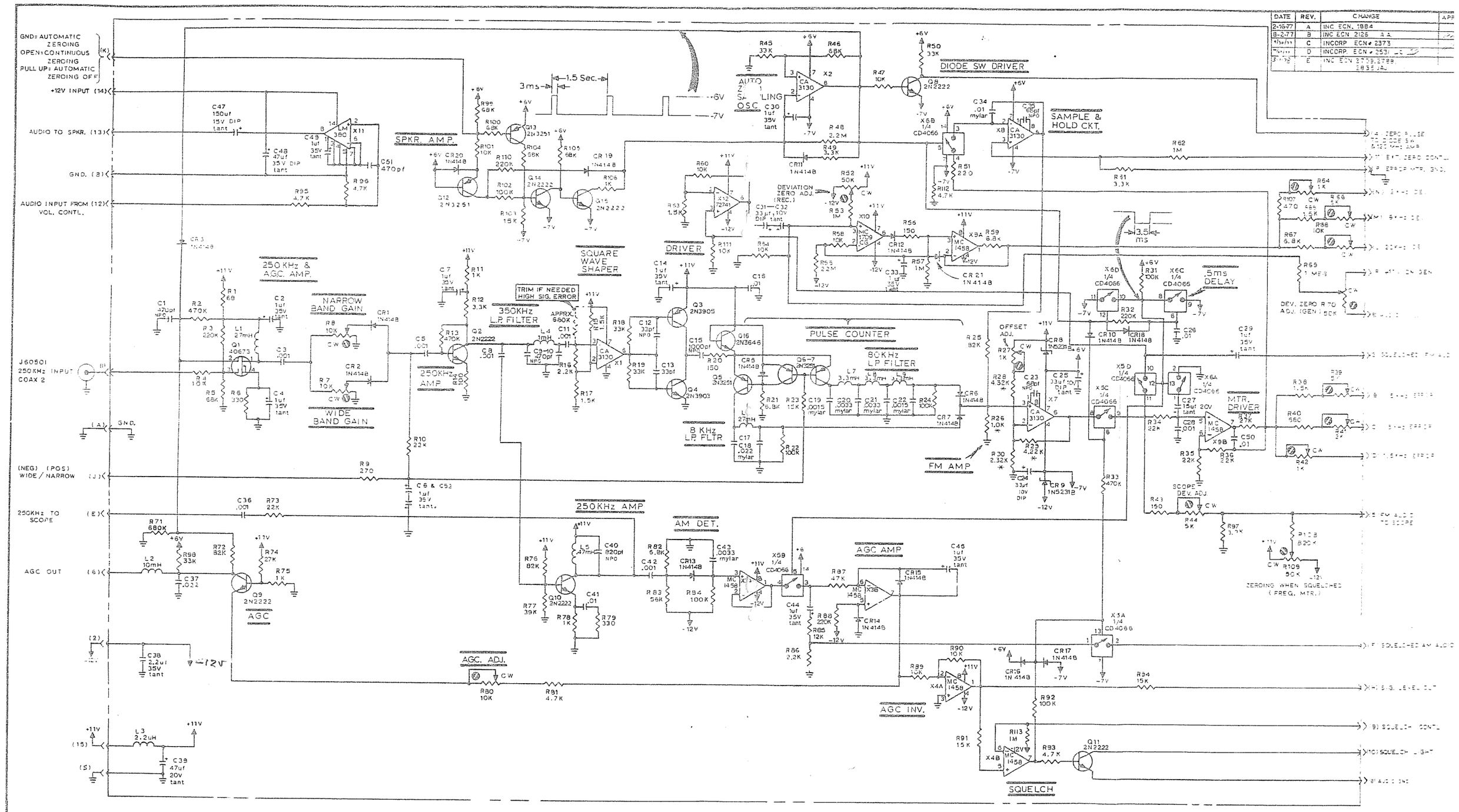

DATE	REV.	CHANGE	APP
2-10-77	A	INC. ECN. 1884	
8-2-77	B	INC ECN 2125 A.A.	
4/5/77	C	INCORP. ECN # 2373	
[illegible]	D	INCORP. ECN # 2531 [illegible]	
[illegible]	E	INC ECN 2775, 2788, 2835 [illegible]	

1. ALL RES. IN Ω 1/8 W
   * NOTED ARE 1% 1/4 W
2. CAPS. IN uf UNLESS OTHERWISE NOTED
3. LAST NUMBERS USED R113, C52, CR21 Q16, L9, TH1, X12
4. NOS. NOT USED. C45, CR4
5. 'SM' CAPACITORS ARE "NPO" TYPE ON SOME UNITS

1-23-0573 P/LIST
2-23-0573 ARTWORK

INSTRUMENT FLIGHT RESEARCH CORP.
4053 Navajo Lane
Wichita, Ks.

250 KHz IF-MON.-AUDIO BOARD (SCHEMATIC)

PART NO. 4-23-0605 REV. E 2-14-78

SCALE — SHEET FMAM1000A1 SHT. 1 of 1

DATE	REV	CHANGE	APP'D
[illegible]	B	ORIGINAL RELEASE	[illegible]
[illegible]	C	INCORP ECN # 2373 & 2347 NC	[illegible]
[illegible]	D	NC ECN # 2519 & 2551 NC	[illegible]
[illegible]	E	INC ECN 2[illegible]	[illegible]

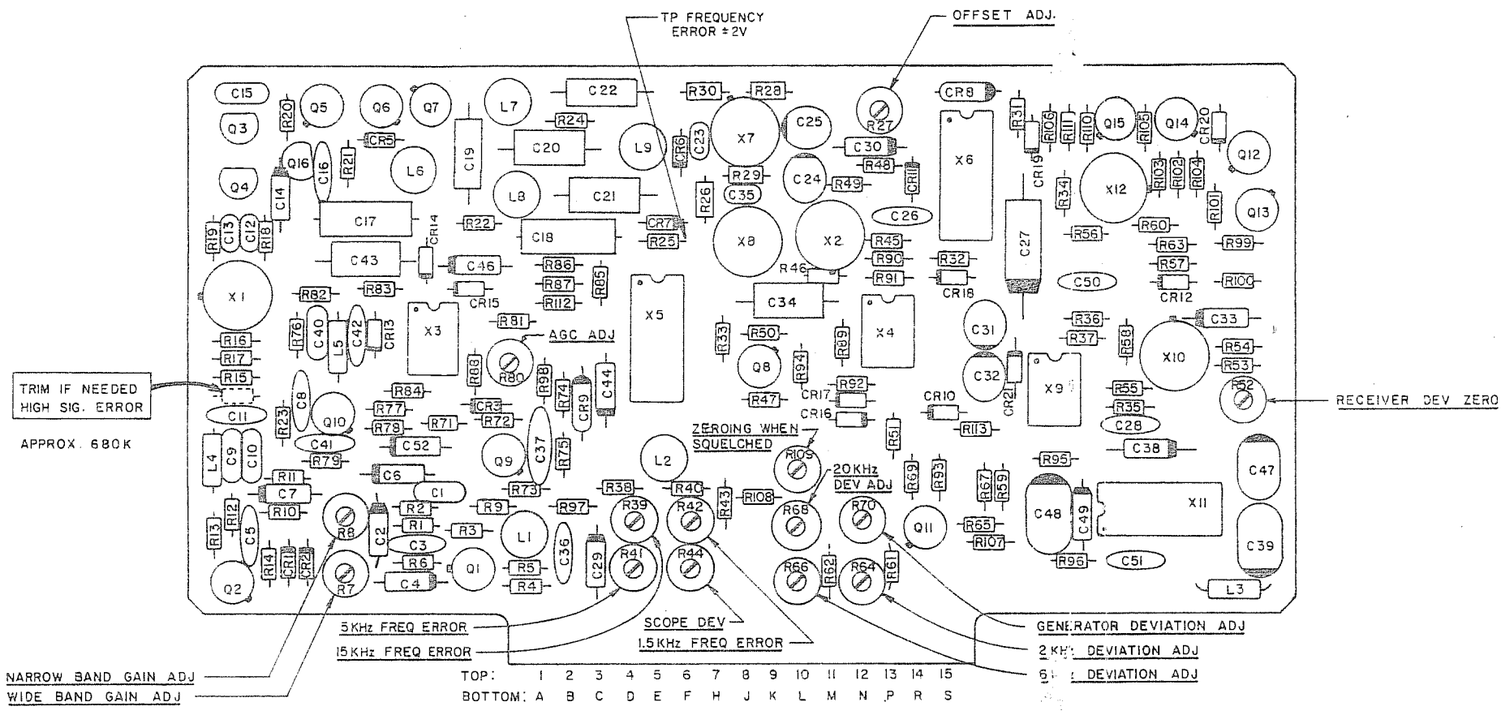

PC BOARD # 2-23-0572
SCHEMATIC # 4-23-0605

IN #	FUNCTION	PIN #	FUNCTION
15	+11 V	S	GROUND
14	+12 V INPUT	R	+11 V ON GEN
13	AUDIO TO SPEAKER	P	ERROR MTR GND
12	AUDIO INPUT FROM VOL CONTL	N	2 KHz DEVIATION
11	EXT ZERO CONTROL	M	6 KHz DEVIATION
10	SQUELCH LIGHT	L	20 KHz DEVIATION
9	SQUELCH CONTROL	K	GND = AUTOMATIC ZEROING OPEN = CONTINUOUS ZEROING PULL UP = AUTO ZEROING OFF
8	AUDIO GROUND	J	(NEG) (POS) WIDE NARROW
7	NC	H	SIG LEVEL OUT
6	AGC OUT	F	SQUELCHED AM AUDIO
5	FM AUDIO TO SCOPE	E	250 KHz TO SCOPE
4	ZERO PULSE TO DIODE SW & 1200 MHz AMP	D	1.5 KHz ERROR
3	SQUELCHED FM AUDIO	C	5 KHz ERROR
2	-12 V	B	15 KHz ERROR
1	250 KHz INPUT	A	GROUND

ITEM	REQ'D	PART NO	DESCRIPTION
		23-0573	250 KHz IF MODULE - F

LIST OF MATERIALS

TOLERANCES
UNLESS OTHERWISE SPECIFIED
ALL DIMENSIONS APPLY AFTER FINISH
DECIMALS: .XX = ± .010 .XXX = ± .005
ANGLES: ± 1/2°
FRACTIONS: ± 1/64
SURFACE ROUGHNESS 125
REMOVE ALL BURRS

DRAWN R.M.K. DATE 3/1/76
CHECKED DATE
APPROVED DATE

- IFR INC -
WICHITA, KANSAS

TITLE 250 KHz IF MODULE AUDIO BOARD ASSEMBLY DWG

MATERIAL
FINISH

SIZE C
PART NUMBER 2-23-0572
REV F
SCALE 2:1
WEIGHT
SHEET 1 OF 3

FIN/MT DWG NO. 23-0573
MODEL
QTY 1
NEXT ASSY
APPLICATION

DATE	REV	CHANGE	APPD
2-16 77	A	INCORP ECN #1943	
5-4-77	B	INCORP ECN#2013 T.T.	
7/27/77	C	INCORP. ECN # 2193	
8/24/77	D	INCORP ECN # 2316	
[illegible]	E	INC. ECN 2624	
[illegible]	F	INC. ECN # 2647	
7/10/78	G	INC. ECN # 2869	

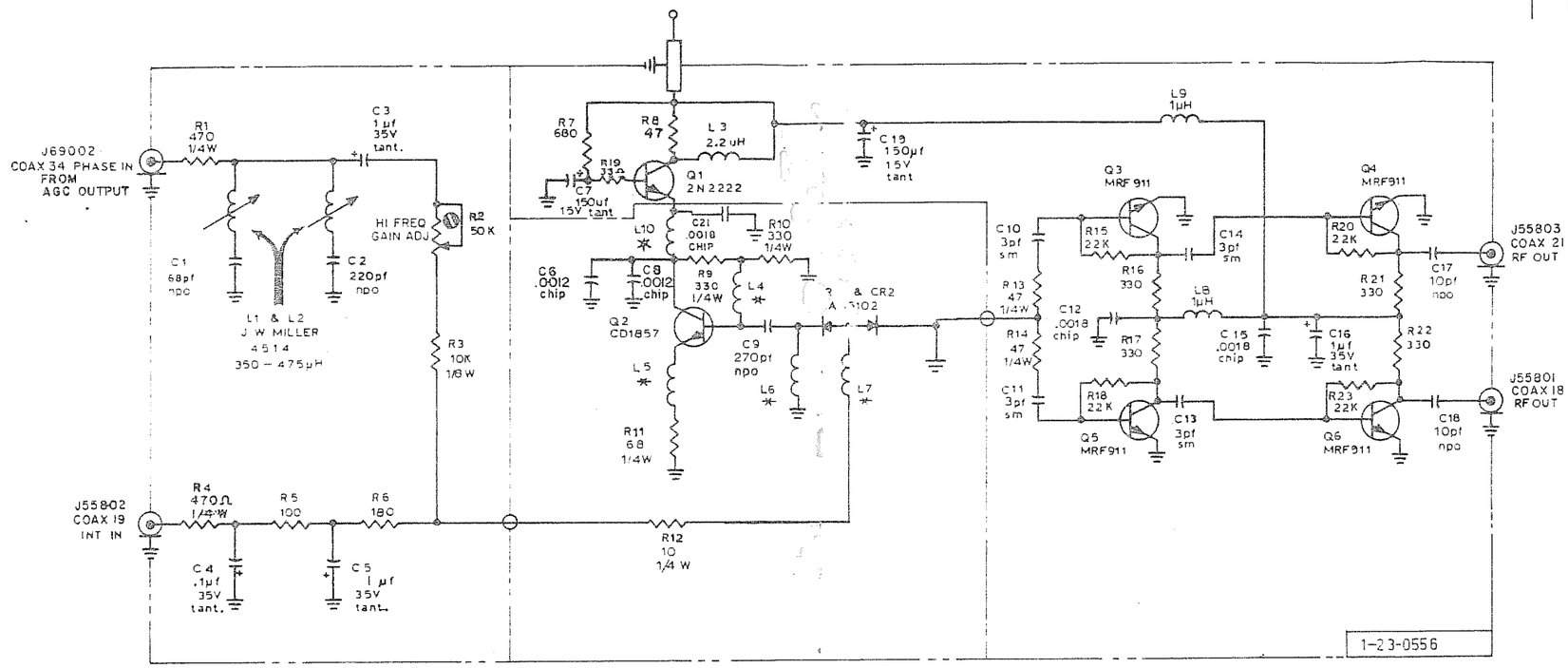

* ,L5,L6,L7,L10 ARE 1-23-0597

NOTES:

1. ALL RESISTORS ARE 1/8 W 10% EXCEPT AS SHOWN.
2. ALL RESISTANCES ARE IN OHMS EXCEPT AS SHOWN.
3. ALL CAPACITANCES ARE IN MICROFARADS EXCEPT AS SHOWN.

LAST USED NO'S.
C21
CR2
L8
Q6
R25

ITEM	REQ'D	PART NO.	DESCRIPTION
			LIST OF MATERIALS

- KR INC -
WICHITA, KANSAS

1200-2200MHz OSC., BUFFER, TUNE SUMMATION SCHEMATIC

G 3-23-0558 G

4-77	C	ORIGINAL RELEASE	
4-29-	D	INC. ECN # 2045 & 2013 TT	
7-27-	E	INCORP ECN # 2193	
[illegible]	G	[illegible]	
11-27-	H	INC. ECN 2647	
1-17-	H-1	INC. ECN 2709 TT	
[illegible]	J	[illegible]	

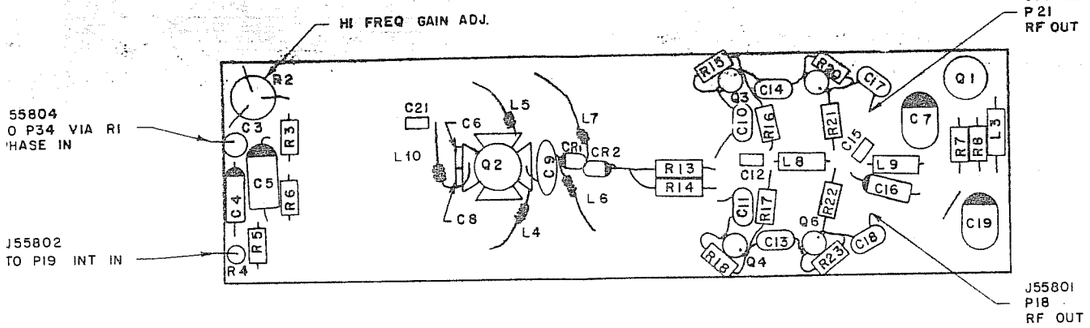

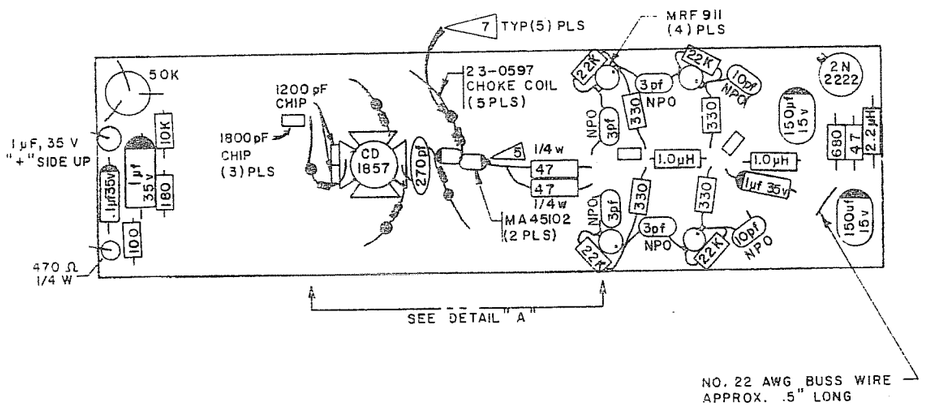

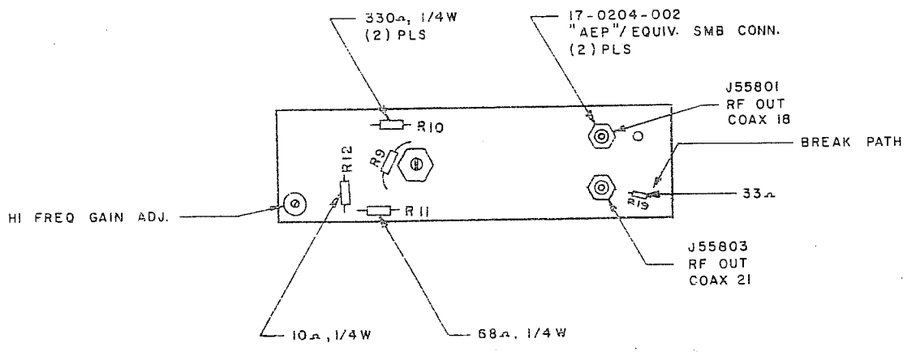

DETAIL "A"

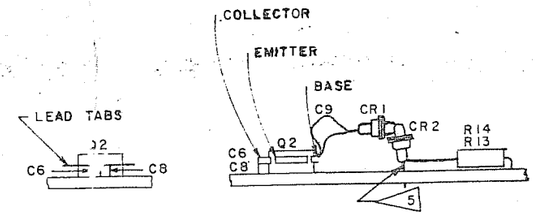

ASSEMBLY NOTES:

1. THE CHIP CAPACITORS MUST BE HANDLED WITH THE AID OF NON-METALLIC TWEEZERS, OR BY USING LEAD TABS.
2. THE TWO CHIP CAPACITORS ARE MOUNTED AS CLOSE TO THE TRANSISTOR AS POSSIBLE AND BACK-TO-BACK, WITH THE LEAD TABS. THE TWO CAPACITORS EXTENDING AWAY FROM EACH OTHER. TRIM LEAD TAB FLUSH WITH COLLECTOR AFTER CHIPS ARE MOUNTED.
3. C9 CAPACITOR IS MOUNTED IN A VERTICAL PLANE WITH ONE END ATTACHED AS CLOSE AS POSSIBLE TO THE TRANSISTOR (BASE LEAD TO BE AS SHORT AS POSSIBLE). THE OTHER LEAD OF C9 SHOULD BE APPROX. .25 SO THAT CR1 LEAD JOINT MAY BE VARIED DURING VCO ALIGNMENT.
4. CR2 DIODE SHOULD BE MOUNTED APPROX. VERTICAL AND ON THE BUSS WIRE JUST ABOVE THE JUNCTION OF R13 AND R14 RESISTORS. CR1 & CR2 LEADS TO BE AS SHORT AS POSSIBLE.
5. THE LEADS OF THE FIVE COILS (23-0597) THAT ARE ATTACHED TO THE TRANSISTOR OR DIODE SHOULD BE AS SHORT AS POSSIBLE. SEE FLAG #7.

NOTES:

1. ALL RESISTORS ARE 1/8W., 10% TOLERANCE EXCEPT AS NOTED.
2. ALL CAPACITOR VALUES ARE IN µF EXCEPT AS NOTED.
3. COMPONENT LEADS MAY EXTEND .04 TO .06 BEYOND BOTTOM OF BOARD AFTER SOLDERING.
4. MAXIMUM HEIGHT OF COMPONENTS TO BE .35 FROM COMPONENT SIDE OF BOARD.

5. USE NO. 22 AWG BUSS WIRE TO CONNECT MA45102 DIODE & (2) 47Ω RESISTORS TO GROUND.

6. FM/AM 1000A

7. APPLY 1/16" DIA STRAND OF "G.E."/EQUIV. RTV FROM GROUND LEAD OF COIL TO SURFACE OF BOARD, APPROX. 1/8" FROM COIL.

ITEM	REQ'D	PART NO.	DESCRIPTION
1	1	23-0559	1200-2200 MHz OSC PC BD ASS'Y

LIST OF MATERIALS

23-0560	1	6	NEXT ASSY / QTY / MODEL / APPLICATION

TOLERANCES
UNLESS OTHERWISE SPECIFIED
ALL DIMENSIONS APPLY AFTER FINISH
DECIMALS: .xx = ± .010 .xxx = ± .005
ANGLES: ± 1/2°
FRACTIONS: ± 1/64
SURFACE ROUGHNESS 125
REMOVE ALL BURRS

DRAWN RKK 4-5-77
CHECKED DW 4-14-77
APPROVED
MATERIAL
FINISH

-IFR INC-
WICHITA, KANSAS

TITLE
1200 - 2200 MHz
OSCILLATOR P.C.
BOARD ASS'Y

SIZE C | PART NUMBER 3-23-0559 | REV 1
SCALE 2:1 | WEIGHT NOTED | SHEET 1 OF 1

DATE	REV	CHANGE	APP'D
1-19-76	A	INC. ECN NO. 2717 A.A.	WW
3-9-76	B	INC ECN 2819 2709 JAJ	WW
4-10-76	C	INC ECN 2912	WW

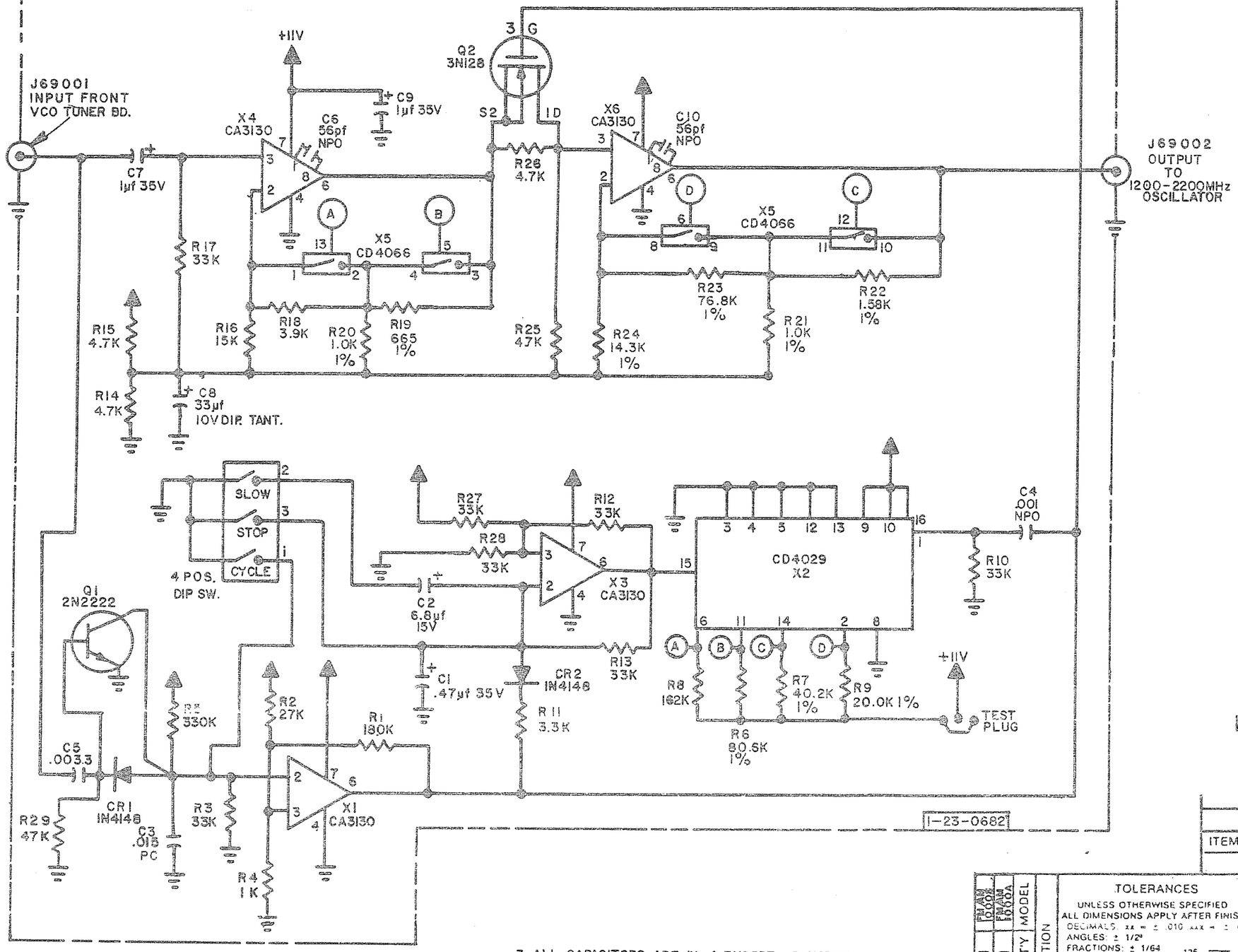

EFFECTIVE: 1000A S/N 882 & ON
1000S S/N 170 & ON

ITEM	REQ'D	PART NO.	DESCRIPTION

LIST OF MATERIALS

23-0644	1	FRAME COMP.	MODEL
23-0216	1	FRAME 1060A	QT'Y
NEXT ASSY			APPLICATION

TOLERANCES
UNLESS OTHERWISE SPECIFIED
ALL DIMENSIONS APPLY AFTER FINISH
DECIMALS: .xx = ± .010 .xxx = ± .005
ANGLES: ± 1/2°
FRACTIONS: ± 1/64
SURFACE ROUGHNESS 125
REMOVE ALL BURRS

DRAWN TenEyck DATE 11-29-77
CHECKED DATE 11-29-77
APPROVED DATE 12-10-77

MATERIAL
FINISH

- IFR INC -
WICHITA, KANSAS

TITLE
AGC SYSTEM
SCHEMATIC

SIZE B | PART NUMBER 2-23-0690 | REV C
SCALE | WEIGHT | SHEET 1 OF 1

NOTES:

1. ALL RESISTORS ARE 1/4W 10% TOL & VALUES ARE IN OHMS UNLESS OTHERWISE SPECIFED.
2. LAST NOS. USED C10, R29, X6, D2, & J2.
3. ALL CAPACITORS ARE IN µf EXCEPT AS NOTED.

DATE	REV	CHANGE	APP'D
4-10-78	A	INC ECN 2912	

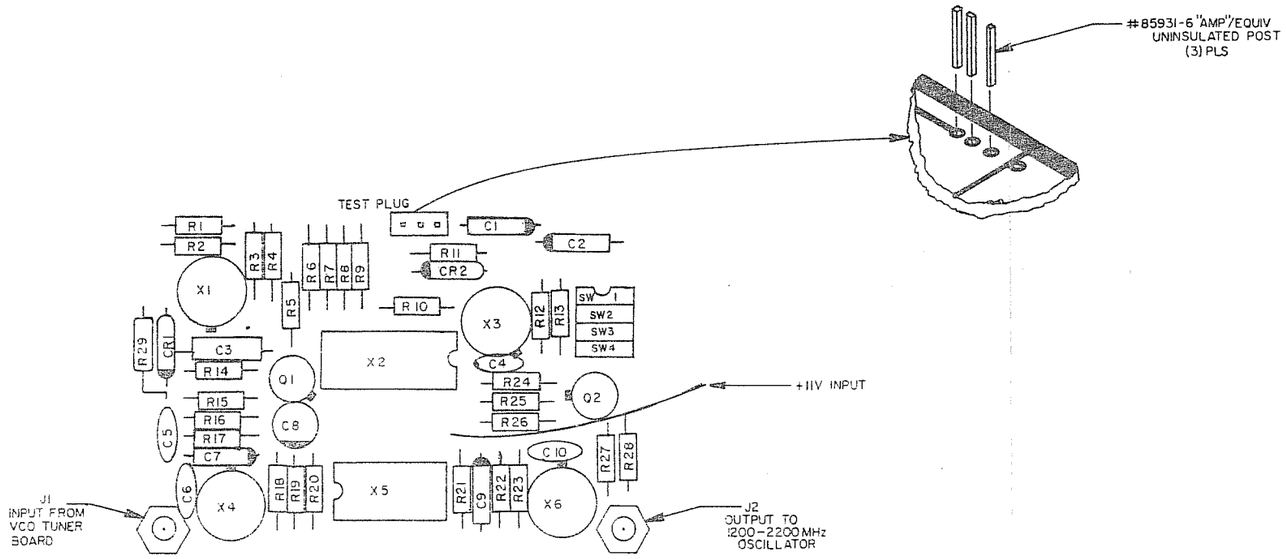

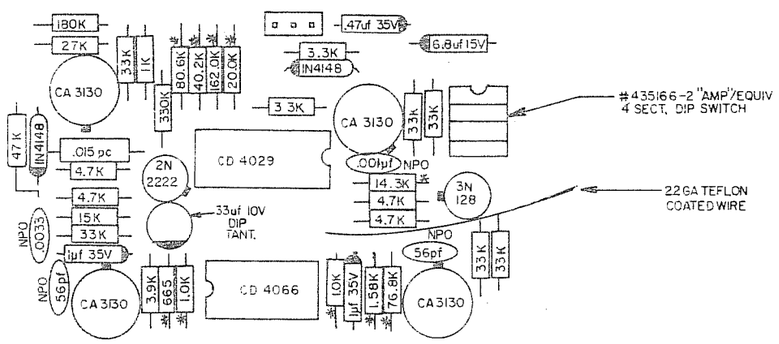

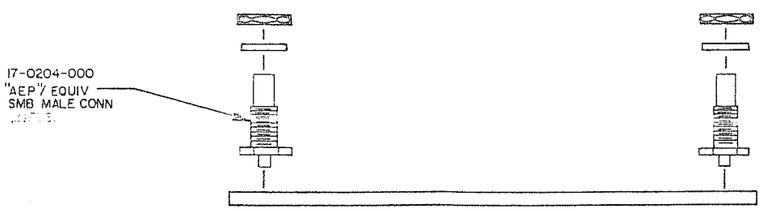

7. SCHEMATIC NO. 2-23-0690
6. PC BOARD NO. 1-23-0682
5. COMPONENT LEADS MAY EXTEND .04 TO .06 BEYOND BOTTOM OF BOARD AFTER SOLDERING.
4. MAX. HEIGHT OF COMPONENTS TO BE .37 FROM COMPONENT SIDE OF BOARD.
3. ALL CAPACITORS ARE IN µf EXCEPT AS NOTED.
2. "*" DENOTES 1/4W, 1% TOL. RESISTORS.
1. ALL RESISTORS ARE 1/4W, 10% TOL. EXCEPT AS NOTED.

EFFECTIVE: FM/AM1000A S/N 882 & ON
FM/AM1000S S/N 170 & ON

ITEM	REQ'D	PART NO.	DESCRIPTION

LIST OF MATERIALS

23-0216	1	FM/AM 1000A	NEXT ASSY	MODEL
23-0644	1	FM/AM 1000S	QTY	

APPLICATION

TOLERANCES
UNLESS OTHERWISE SPECIFIED
ALL DIMENSIONS APPLY AFTER FINISH
DECIMALS: .XX = ± .010 .XXX = ± .005
ANGLES: ± 1/2°
FRACTIONS: ± 1/64
SURFACE ROUGHNESS 125
REMOVE ALL BURRS

DRAWN TenEyck DATE 11-28-77
CHECKED DATE
APPROVED DATE

-IFR INC-
WICHITA, KANSAS

TITLE
AGC SYSTEM
PC BOARD
ASSEMBLY

MATERIAL
FINISH

SIZE C | PART NUMBER 3-23-0686 | REV A
SCALE 2=1 | WEIGHT — | SHEET 1 OF 1

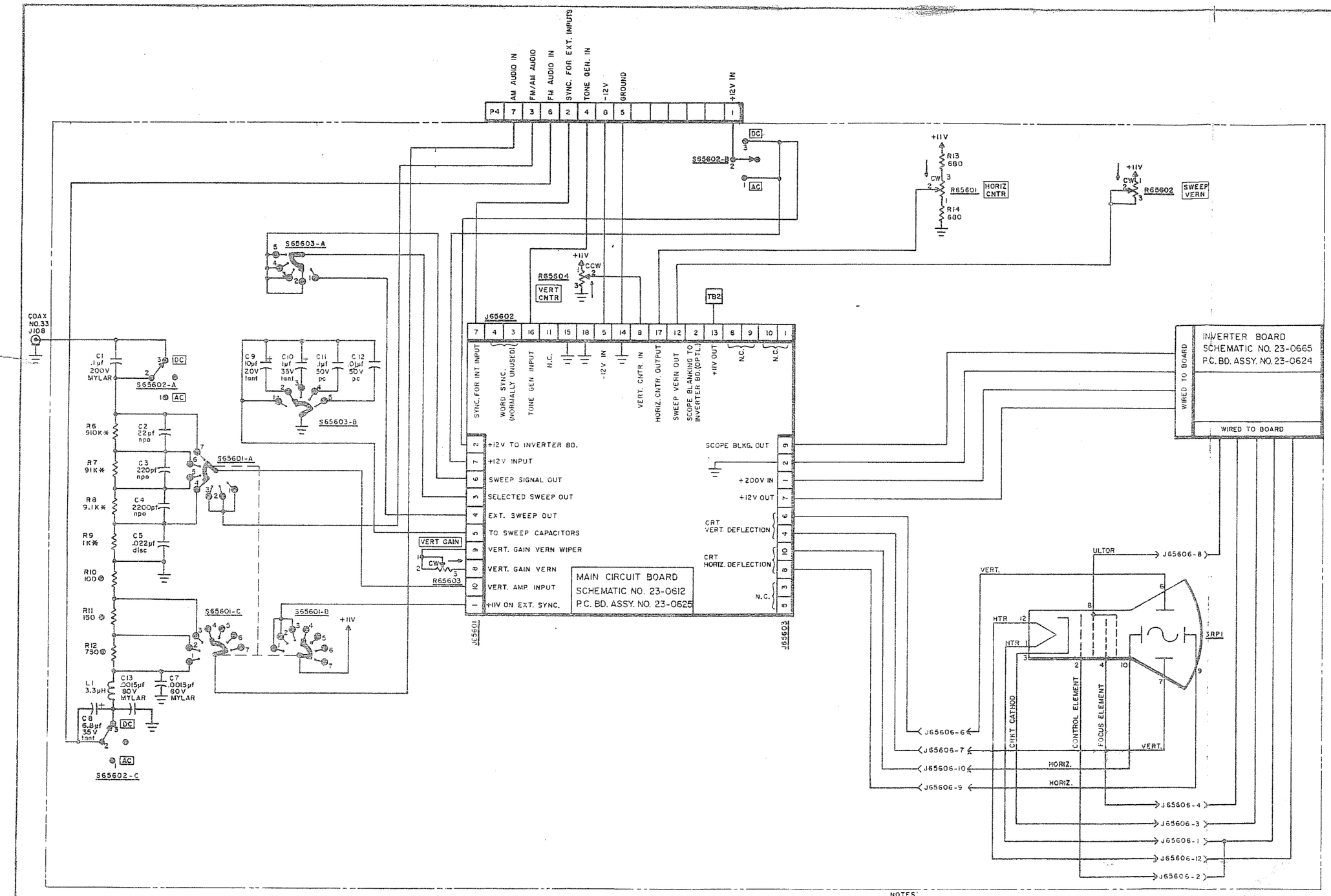

NOTES:
1. TB-2 IS +11V CONSTANT TO PANEL CONTROLS.
2. ALL RESISTORS ARE 1/4 W., 10% TOLERANCE EXCEPT AS NOTED.
3. * DENOTES 1/8 W., 5% TOLERANCE RESISTOR
4. ⊕ DENOTES 1/4 W., 1% TOLERANCE RESISTOR

4-23-0703 SCOPE INTERCONNECT

LIST OF MATERIALS

LIFE INC.
HOUSTON, TEXAS

SCOPE INTERCONNECT

D 4-23-0703

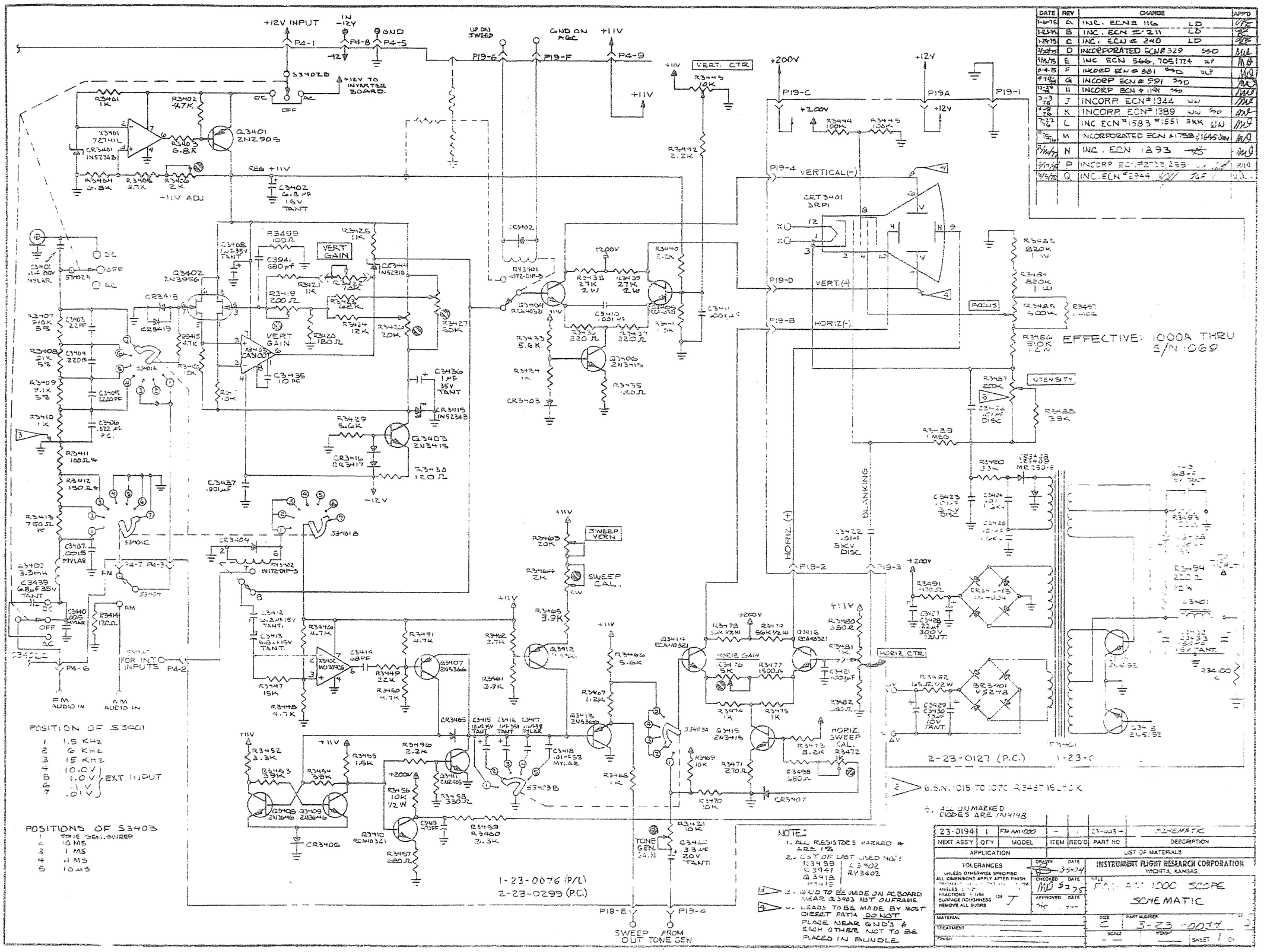

DATE	REV	CHANGE	APPD
1-6-76	A	INC. ECN # 116 LD	
1-23-76	B	INC. ECN # 211 LD	
1-29-76	C	INC. ECN # 240 LD	
2-24-76	D	INCORPORATED ECN # 329 SSD	
3-15-76	E	INC ECN 566, 705, 724	
6-4-76	F	INCORP ECN # 881 SSD DLP	
9-10-76	G	INCORP ECN # 991 SSD	
11-29-76	H	INCORP ECN # 1191 SSD	
3-3-76	J	INCORP. ECN # 1344 WW	
4-19-76	K	INCORP. ECN # 1389 WW SSD	
7-27-76	L	INC ECN # 1583 # 1551 RKK WW	
11-15-76	M	INCORPORATED ECN # 1758 & 1645 WW	
5-16-77	N	INC. ECN 1893	
3-17-78	P	INCORP ECN # 2733, 2338	
11-6-78	Q	INC. ECN # 2944	

DATE	REV	CHANGE	APP'D

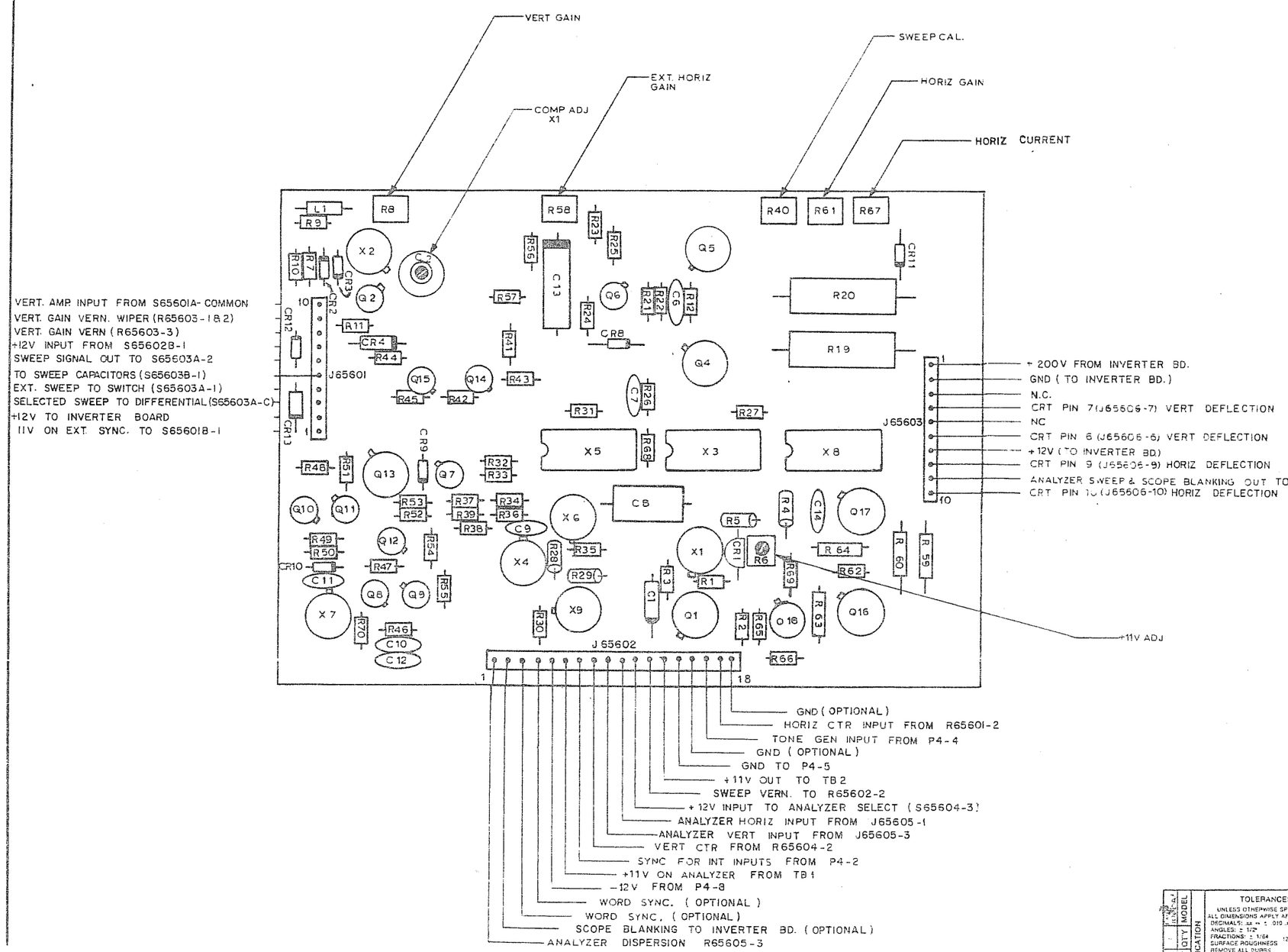

EFFECTIVE: FM/AM1000A S/N 1070 & ON

ITEM	REQ'D	PART NO	DESCRIPTION

LIST OF MATERIALS

NEXT ASS'Y	QTY	MODEL	APPLICATION

TOLERANCES
UNLESS OTHERWISE SPECIFIED
ALL DIMENSIONS APPLY AFTER FINISH
DECIMALS: .XX = ± .010 .XXX = ± .005
ANGLES: ± 1/2°
FRACTIONS: ± 1/64
SURFACE ROUGHNESS 125
REMOVE ALL BURRS

DRAWN 3-31-77
CHECKED
APPROVED

MATERIAL
FINISH

TITLE
-IFR INC-
WICHITA, KANSAS
SCOPE MAIN BOARD
ASS'Y DWG

SIZE C | PART NUMBER 3-23-0625 | REV C
SCALE | WEIGHT | SHEET 2 OF 2

DATE	REV	CHANGE	APP
10-7-71	A	INC ECN #2712	
7-19-72	A	INC ECN #2780 A.A	
7-23-73	A	INC ECN 2753	
7-5-78	B	INC ECN 3058	

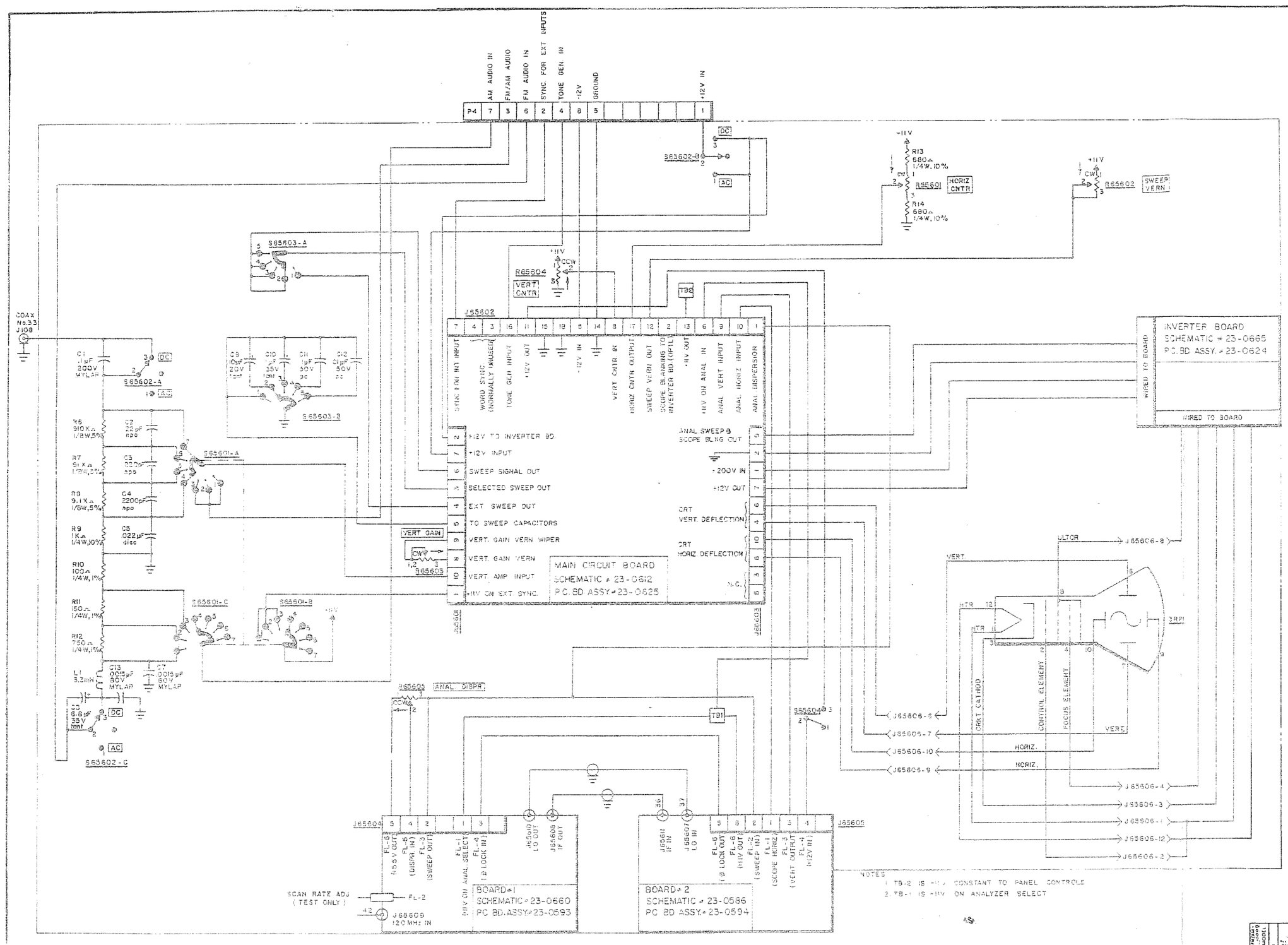

ITEM	REQ'D	PART NO.	DESCRIPTION
—	—	23-0656	SPECT. ANAL. INTERCONNECT

LIST OF MATERIALS

TOLERANCES UNLESS OTHERWISE SPECIFIED ALL DIMENSIONS APPLY AFTER FINISH DECIMALS ±.0 ±.010 ±.005 ANGLES ±1° FRACTIONS ±1/64 SURFACE ROUGHNESS REMOVE ALL BURRS

DRAWN LC 4/4/71 CHECKED 10-12-72 APPROVED

MATERIAL —

FINISH —

- IFR INC - WICHITA, KANSAS

SPECTRUM ANALYZER INTERCONNECT

FM/AM-100

SIZE D — 4-23-0656

SCALE — SHEET 1 OF

23-0664 NEXT ASSY

FM/AM-100 USED ON

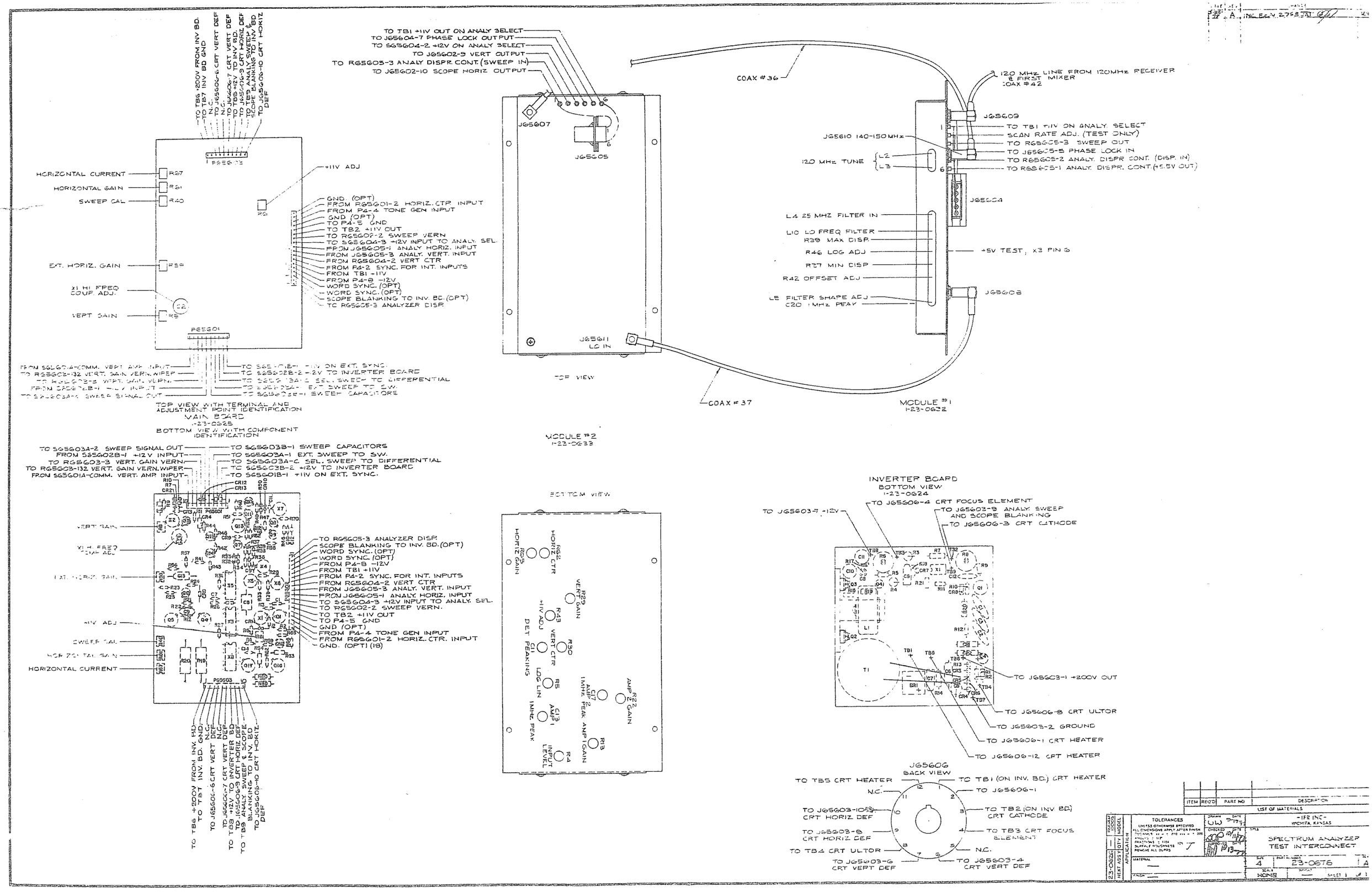
TO TB6 +200V FROM INV BD.
TO TB7 INV BD GND
N.C.
TO J6560-6 CRT VERT DEF
TO J6560-7 CRT VERT DEF
TO TB6 +12V TO INV BD.
TO J6560-9 CRT HORIZ DEF
TO TB9 ANALY SWEEP & SCOPE BD
TO J6560-10 CRT HORIZ DEF
P6560-2
HORIZONTAL CURRENT
HORIZONTAL GAIN
SWEEP CAL
EXT. HORIZ. GAIN
X1 HI. FREQ COUP. ADJ.
VERT GAIN
+11V ADJ
GND. (OPT)
FROM R6560-1-2 HORIZ. CTR. INPUT
FROM P4-4 TONE GEN INPUT
GND (OPT)
TO P4-5 GND
TO TB2 +11V OUT
TO R6560-2 SWEEP VERN
TO S6560-3 +12V INPUT TO ANALY. SEL.
FROM J6560-1 ANALY HORIZ. INPUT
FROM J6560-3 ANALY. VERT. INPUT
FROM R6560-2 VERT CTR
FROM P4-2 SYNC. FOR INT. INPUTS
FROM TB1 +11V
FROM P4-8 -12V
WORD SYNC. (OPT)
WORD SYNC. (OPT)
SCOPE BLANKING TO INV. BD. (OPT)
TO R6560-3 ANALYZER DISP.
P6560-1
FROM S6560-4-COMM. VERT. AMP. INPUT
TO R6560-132 VERT. GAIN VERN. WIPER
TO R6560-3 VERT. GAIN VERN.
FROM S6560-2B-1 +12V INPUT
TO S6560-3A-2 SWEEP SIGNAL OUT
TO S6560-1B-1 +11V ON EXT. SYNC.
TO S6560-2B-2 +12V TO INVERTER BOARD
TO S6560-3A-1 SEL. SWEEP TO DIFFERENTIAL
TO S6560-3A-1 EXT SWEEP TO SW.
TO S6560-3B-1 SWEEP CAPACITORS
TOP VIEW WITH TERMINAL AND ADJUSTMENT POINT IDENTIFICATION
MAIN BOARD
1-23-0625
BOTTOM VIEW WITH COMPONENT IDENTIFICATION
TO S6560-3A-2 SWEEP SIGNAL OUT
FROM S6560-2B-1 +12V INPUT
TO R6560-3 VERT. GAIN VERN.
TO R6560-132 VERT. GAIN VERN. WIPER
FROM S6560-1A-COMM. VERT. AMP. INPUT
TO S6560-3B-1 SWEEP CAPACITORS
TO S6560-3A-1 EXT. SWEEP TO SW.
TO S6560-3A-C SEL. SWEEP TO DIFFERENTIAL
TO S6560-2B-2 +12V TO INVERTER BOARD
TO S6560-1B-1 +11V ON EXT. SYNC.
P6560-1
TO R6560-3 ANALYZER DISP.
SCOPE BLANKING TO INV. BD. (OPT)
WORD SYNC. (OPT)
WORD SYNC. (OPT)
FROM P4-8 -12V
FROM TB1 +11V
FROM P4-2 SYNC. FOR INT. INPUTS
FROM R6560-2 VERT CTR
FROM J6560-3 ANALY. VERT. INPUT
FROM J6560-1 ANALY. HORIZ. INPUT
TO S6560-3 +12V INPUT TO ANALY. SEL.
TO R6560-2 SWEEP VERN.
TO TB2 +11V OUT
TO P4-5 GND
GND (OPT)
FROM P4-4 TONE GEN INPUT
FROM R6560-1-2 HORIZ. CTR. INPUT
GND. (OPT) (18)
VERT GAIN
X1 HI. FREQ COUP. ADJ.
EXT. HORIZ. GAIN
+11V ADJ
SWEEP CAL
HORIZONTAL GAIN
HORIZONTAL CURRENT
TO TB6 +200V FROM INV. BD.
TO TB7 INV. BD. GND.
N.C.
TO J6560-6 CRT VERT DEF
N.C.
TO J6560-7 CRT VERT DEF
TO TB6 +12V TO INVERTER BD
TO J6560-9 CRT HORIZ DEF
TO TB9 ANALY. SWEEP & SCOPE BLANKING TO INV. BD
TO J6560-10 CRT HORIZ DEF
TO TB1 +11V ON ANALY SELECT
TO J6560-7 PHASE LOCK OUTPUT
TO S6560-2 +12V ON ANALY SELECT
TO J6560-9 VERT OUTPUT
TO R6560-3 ANALY DISPR. CONT. (SWEEP IN)
TO J6560-10 SCOPE HORIZ OUTPUT
J6560-7
J6560-5
J6560-11
LO IN
TOP VIEW
COAX #36
COAX #37
120 MHz LINE FROM 120MHz RECEIVER & FIRST MIXER
COAX #42
J6560-9
TO TB1 +11V ON ANALY. SELECT
SCAN RATE ADJ. (TEST ONLY)
TO R6560-3 SWEEP OUT
TO J6560-5 PHASE LOCK IN
TO R6560-2 ANALY. DISPR CONT. (DISP. IN)
TO R6560-1 ANALY. DISPR. CONT. (+5.5V OUT)
J6560-10 140-150MHz
120 MHz TUNE
L2
L3
J6560-4
L4 25 MHZ FILTER IN
L10 LO FREQ FILTER
R39 MAX DISP.
R46 LOG ADJ
R37 MIN DISP
R42 OFFSET ADJ
L5 FILTER SHAPE ADJ
C20 1MHz PEAK
+5V TEST, X3 PIN 6
J6560-8
MODULE #1
1-23-0632
MODULE #2
1-23-0633
BOTTOM VIEW
HORIZ GAIN
HORIZ CTR
VERT GAIN
+11V ADJ
VERT CTR
DET PEAKING
LOG LIN
1MHz PEAK
AMP 2 1MHz PEAK
AMP 2 GAIN
AMP 1 GAIN
INPUT LEVEL
INVERTER BOARD
BOTTOM VIEW
1-23-0624
TO J6560-4 CRT FOCUS ELEMENT
TO J6560-7 +12V
TO J6560-9 ANALY. SWEEP AND SCOPE BLANKING
TO J6560-3 CRT CATHODE
TO J6560-1 +200V OUT
TO J6560-8 CRT ULTOR
TO J6560-2 GROUND
TO J6560-1 CRT HEATER
TO J6560-12 CRT HEATER
J6560
BACK VIEW
TO TB5 CRT HEATER
TO TB1 (ON INV. BD.) CRT HEATER
N.C.
TO J6560-1
TO J6560-10 CRT HORIZ DEF
TO TB2 (ON INV BD.) CRT CATHODE
TO J6560-8 CRT HORIZ DEF
TO TB3 CRT FOCUS ELEMENT
TO TB4 CRT ULTOR
N.C.
TO J6560-6 CRT VERT DEF
TO J6560-4 CRT VERT DEF
ITEM
REQ'D
PART NO
DESCRIPTION
LIST OF MATERIALS
TOLERANCES
UNLESS OTHERWISE SPECIFIED
-IFR INC-
WICHITA, KANSAS
SPECTRUM ANALYZER TEST INTERCONNECT
23-0676
NEXT ASSY
USED ON
APPLICATION
MODEL
MATERIAL
FINISH
SCALE
NONE
SHEET 1 OF 1

DATE	REV	CHANGE	APP'D
8/4/77	A	INCORP. ECN # 2214 LC	
9/6/77	B	INCORP. ECN # 2330 LC	
12/7/77	C	INCORP. ECN # 2430 LC	

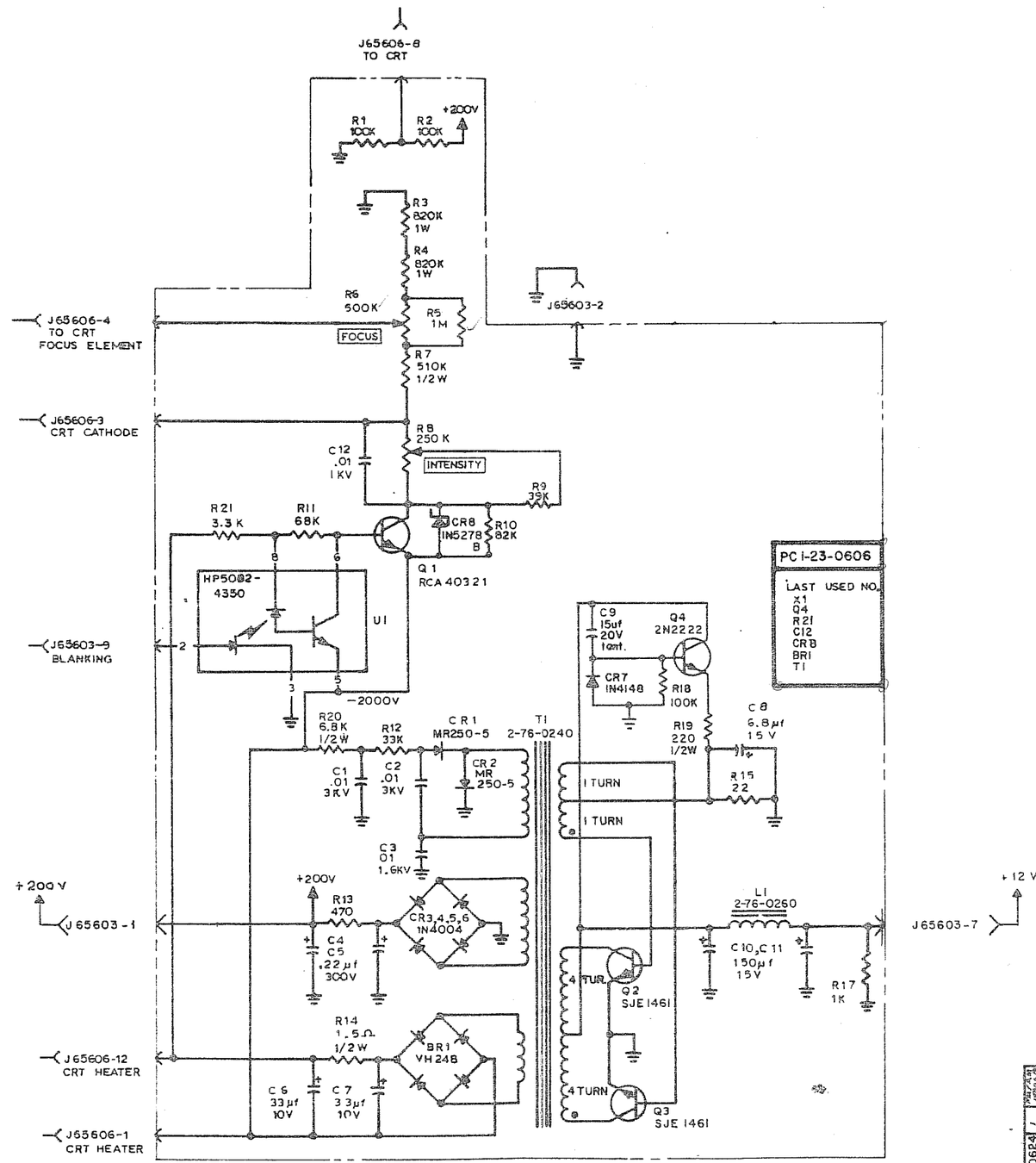

EFFECTIVE: FM/AM1000A S/N 1070 & ON

ITEM	REQ'D	PART NO.	DESCRIPTION

LIST OF MATERIALS

TOLERANCES
UNLESS OTHERWISE SPECIFIED
ALL DIMENSIONS APPLY AFTER FINISH
DECIMALS .XX ± .010 .XXX ± .005
ANGLES ± 1/2°
FRACTIONS ± 1/64
SURFACE ROUGHNESS 125
REMOVE ALL BURRS

DRAWN LD DATE 7/15/77
CHECKED DATE
APPROVED DATE

- IFR INC -
WICHITA, KANSAS

TITLE
INVERTER BOARD
SCHEMATIC FOR THE
SPECTRUM ANALYZER

MATERIAL
FINISH

SIZE C | PART NUMBER 3-23-0665 | REV C
SCALE | WEIGHT | SHEET 1 OF 1

23-0624 / NEXT ASSY | QTY | MODEL | APPLICATION

8/31/77	D	REVISED & REDRAWN LC	
9/23/77	E	INCORP. ECN # 2389	
9/27/77	F	INCORP. ECN # 2430 LC	
9/14/77	G	INCORP. ECN # 2468 LC	
9/27/77	H	INCORP. ECN # 2498 & 2525 LC	
1/20/78	J-1	INC. ECN # 2727 A.A.	
5-24-78	J-2	INC. ECN 2888	

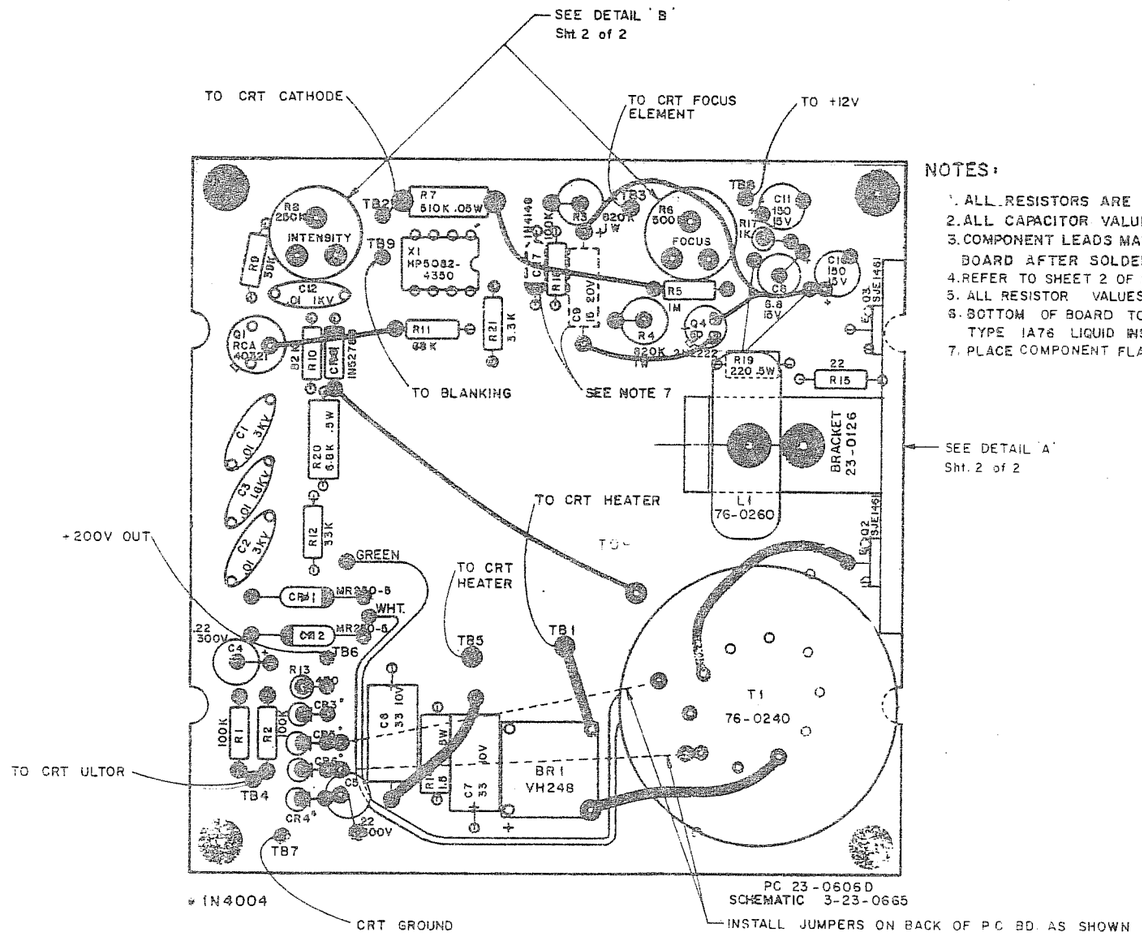

NOTES:

1. ALL RESISTORS ARE 1/4 W., 10% TOLERANCE EXCEPT AS NOTED.
2. ALL CAPACITOR VALUES ARE IN µF EXCEPT AS NOTED.
3. COMPONENT LEADS MAY EXTEND .04 TO .06 BEYOND BOTTOM OF BOARD AFTER SOLDERING.
4. REFER TO SHEET 2 OF 2 FOR PLUG WIRING & DETAIL INFORMATION.
5. ALL RESISTOR VALUES ARE IN Ω EXCEPT AS NOTED.
6. BOTTOM OF BOARD TO BE COATED WITH "HUMISEAL" / EQUIV. TYPE 1A76 LIQUID INSULATION.
7. PLACE COMPONENT FLAT ON BACK SIDE OF P.C. BOARD.

EFFECTIVE: FM/AM1000A S/N 1070 & ON

ITEM	REQ'D	PART NO	DESCRIPTION

LIST OF MATERIALS

23-0626 NEXT ASS'Y	1 QTY	FM/AM-1000A 2994/3 MODEL	APPLICATION
TOLERANCES UNLESS OTHERWISE SPECIFIED ALL DIMENSIONS APPLY AFTER FINISH DECIMALS: .xx = ± .010 .xxx = ± .005 ANGLES: ± 1/2° FRACTIONS: ± 1/64 SURFACE ROUGHNESS 125 REMOVE ALL BURRS	DRAWN LC 8/31/77 CHECKED DATE APPROVED DATE	-IFR INC- WICHITA, KANSAS	TITLE SPECT. ANAL. INVERTER PC BOARD ASSY. FM/AM-1000A
MATERIAL See L/M		SIZE C	PART NUMBER 3-23-0624 REV
FINISH		SCALE 2 X	WEIGHT SHEET 1 OF 2

A	INCORP ECN # 2969 LC	
B	INC ECN 2839 JAW	
C	INC ECN's 2753, 2826	
D	INC ECN 3058 TJT	

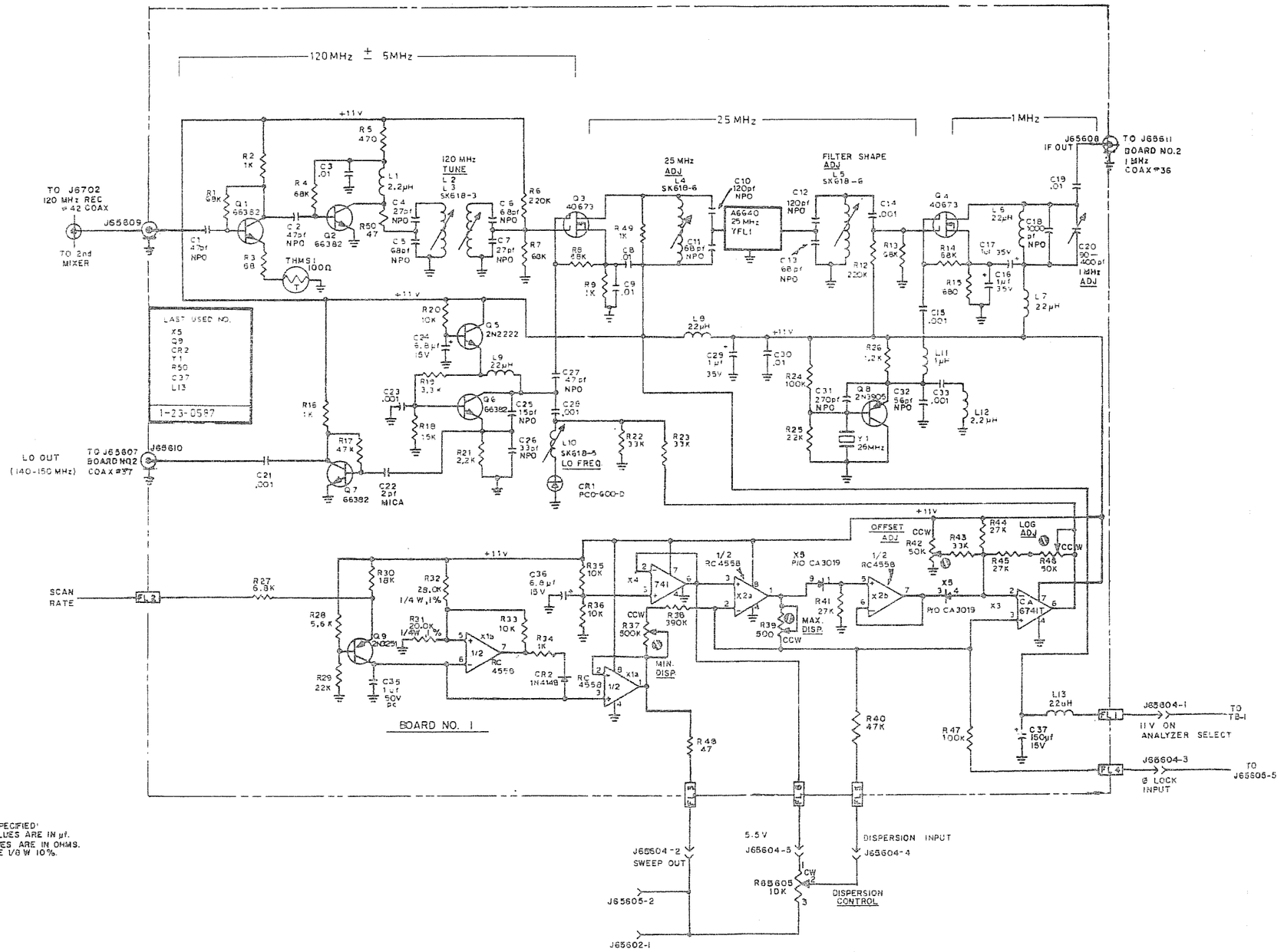

NOTES:

1. UNLESS OTHERWISE SPECIFIED:
   A. ALL CAPACITOR VALUES ARE IN µf.
   B. ALL RESISTOR VALUES ARE IN OHMS.
   C. ALL RESISTORS ARE 1/8 W 10%.

ITEM	REQ'D	PART NO	DESCRIPTION

LIST OF MATERIALS

TOLERANCES UNLESS OTHERWISE SPECIFIED

DRAWN TJT 6-16-77

CHECKED

APPROVED

- IFR INC -
WICHITA, KANSAS

SPECTRUM ANALYZER
BOARD NO.1 SCHEMATIC

SIZE D | PART NUMBER 4-23-0660 | REV D

SCALE | WEIGHT | SHEET 1 OF 1

REV	DATE	DESCRIPTION
1	23-09-90	
1	25-09-95	

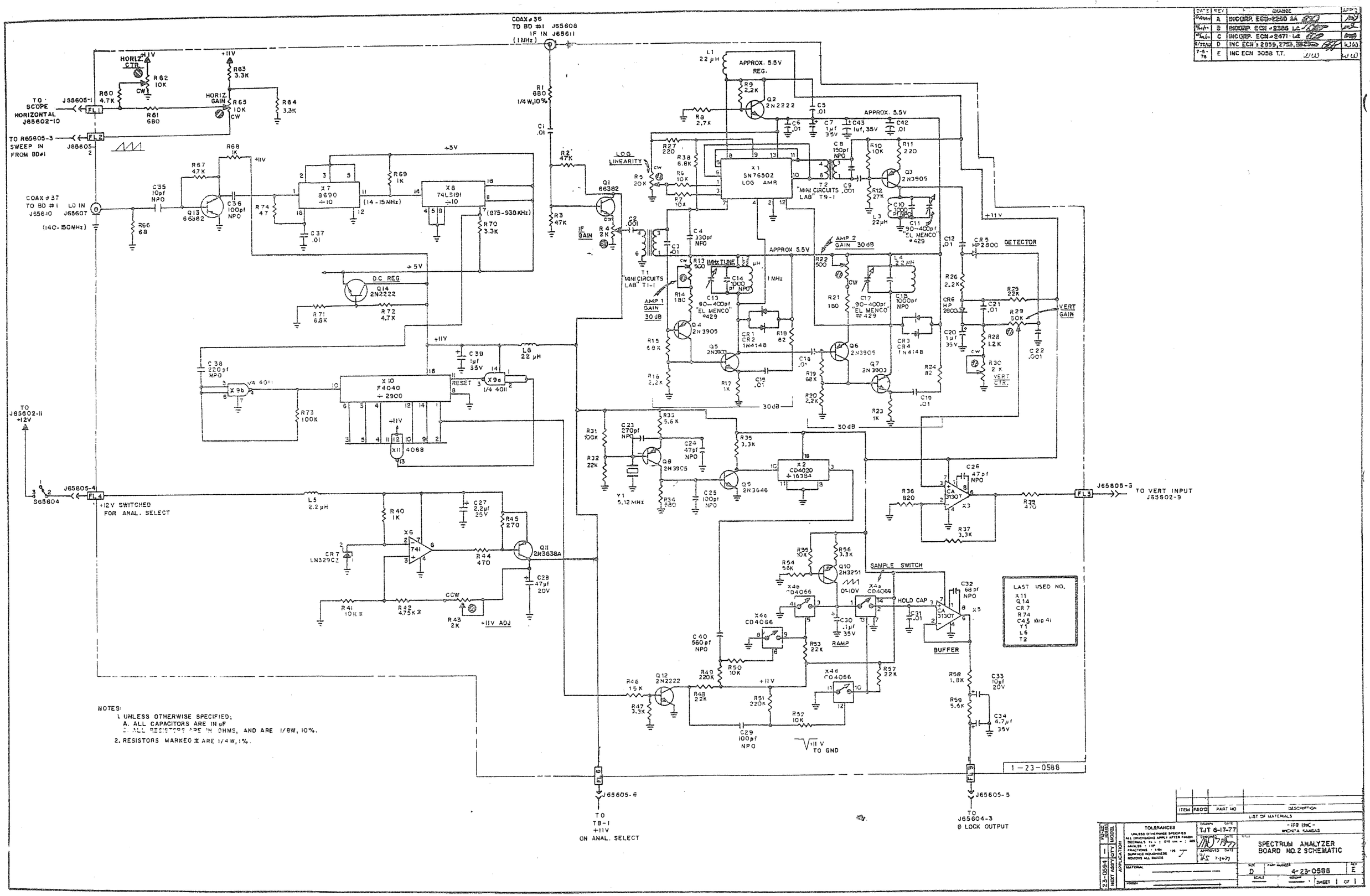

DATE	REV	CHANGE	APP'D
8/24/77	A	INCORP. ECN #2250 AA	
9/14/77	B	INCORP. ECN #2386 LA	
10/14/77	C	INCORP. ECN #2471 LA	
8/22/78	D	INC ECN's 2859, 2753,	
7-5-78	E	INC ECN 3058 T.T.	

NOTES:

1. UNLESS OTHERWISE SPECIFIED;
   A. ALL CAPACITORS ARE IN uF
   B. ALL RESISTORS ARE IN OHMS, AND ARE 1/8W, 10%.
2. RESISTORS MARKED ✱ ARE 1/4W, 1%.

ITEM	REQ'D	PART NO	DESCRIPTION
			LIST OF MATERIALS

NEXT ASSY	23-0594	QTY	—
MODEL			
APPLICATION			

TOLERANCES: UNLESS OTHERWISE SPECIFIED ALL DIMENSIONS APPLY AFTER FINISH. DECIMALS ±.010 ANGLES ±1/2° FRACTIONS ±1/64 SURFACE ROUGHNESS 125 REMOVE ALL BURRS

MATERIAL

FINISH

DRAWN TJT 8-17-77

CHECKED

APPROVED

TITLE: SPECTRUM ANALYZER BOARD NO. 2 SCHEMATIC

- IFB 396C -
WICHITA, KANSAS

SIZE D | PART NUMBER 4-23-0588 | REV E

SCALE | SHEET 1 OF 1

DATE	REV	CHANGE	APPD
8/4/77	A	INCORP. ECN # 2271 LC WW	MJ
2/1/77	B	INCORP ECN # 2365 LC	MJ
2/18/77	C	INC. ECN # 2638 2538 JAT	MJ
9-26-77	C1	INC ECN 2826 JAT	
7-5-78	C-2	INC. ECN 3058 T.T.	

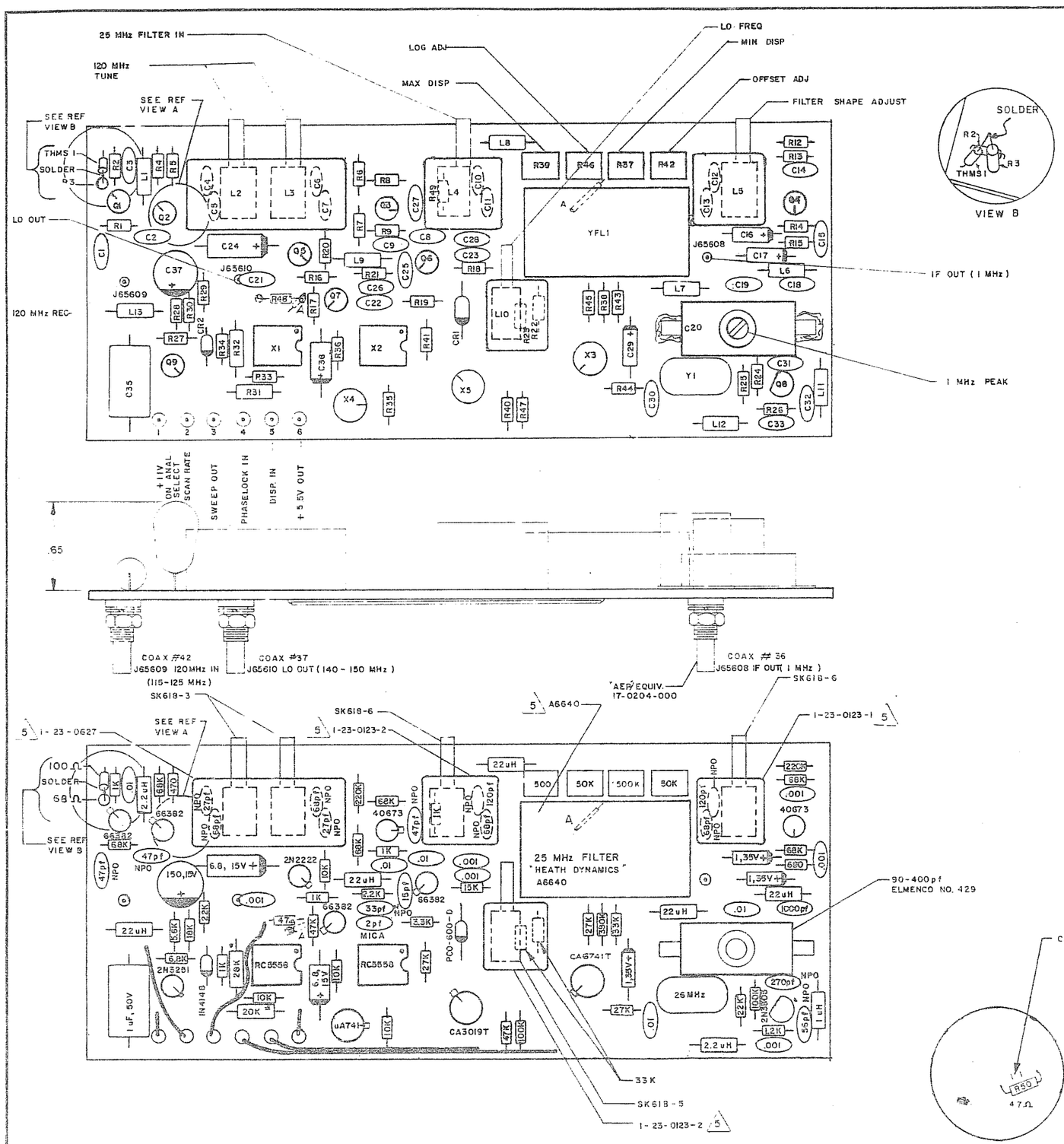

NOTES:

1. ALL RESISTORS ARE 1/8 W., 10 % TOLERANCE EXCEPT AS NOTED.
2. ALL CAPACITOR VALUES ARE IN µF EXCEPT AS NOTED.
3. COMPONENT LEADS MAY EXTEND .04 TO .06 BEYOND BOTTOM OF BOARD AFTER SOLDERING.
4. MAXIMUM HEIGHT OF COMPONENTS TO BE .65 FROM COMPONENT SIDE OF BOARD.
5. ALL RF SHIELDS TO BE COMPLETELY SOLDERED, ALL SIDES.
6. ALL JUMPERS TO BE AWG 24
7. REF DWG: SCHEMATIC 4-23-0660
8. * (ASTERISK) DENOTES ± 1% RESISTOR TOLERANCE 1/4 W

ITEM	REQ'D	PART NO.	DESCRIPTION

LIST OF MATERIALS

TOLERANCES
UNLESS OTHERWISE SPECIFIED
ALL DIMENSIONS APPLY AFTER FINISH
DECIMALS .XX = ± .010 .XXX = ± .005
ANGLES ± 1/2°
FRACTIONS: ± 1/64
SURFACE ROUGHNESS 125
REMOVE ALL BURRS

DRAWN 4/20/77
CHECKED 5-4-77
APPROVED 5-5-77

- IFR INC -
WICHITA, KANSAS

TITLE: SPECTRUM ANALYZER PC BD ASSY BD NO 1

MATERIAL
FINISH

SIZE C | PART NUMBER 3-23-0593 | REV C-2
SCALE 2/1 | WEIGHT | SHEET 1 OF 1

DATE	REV	CHANGE	APP'D
8/12/77	A	UPDATE REV. LETTER A.A.	
8/31/77	B	INCORP. ECN # 2374 [illegible]	
9/14/77	C	INCORP. ECN # 2388 [illegible]	
9/12/78	D	INCORP. ECN # 2471 [illegible]	
11/8/78	E	INCORP. ECN # 2538 AA [illegible]	
8/1/79	E-1	NC ECN 279[illegible]	
8/24/79	F	[illegible]	

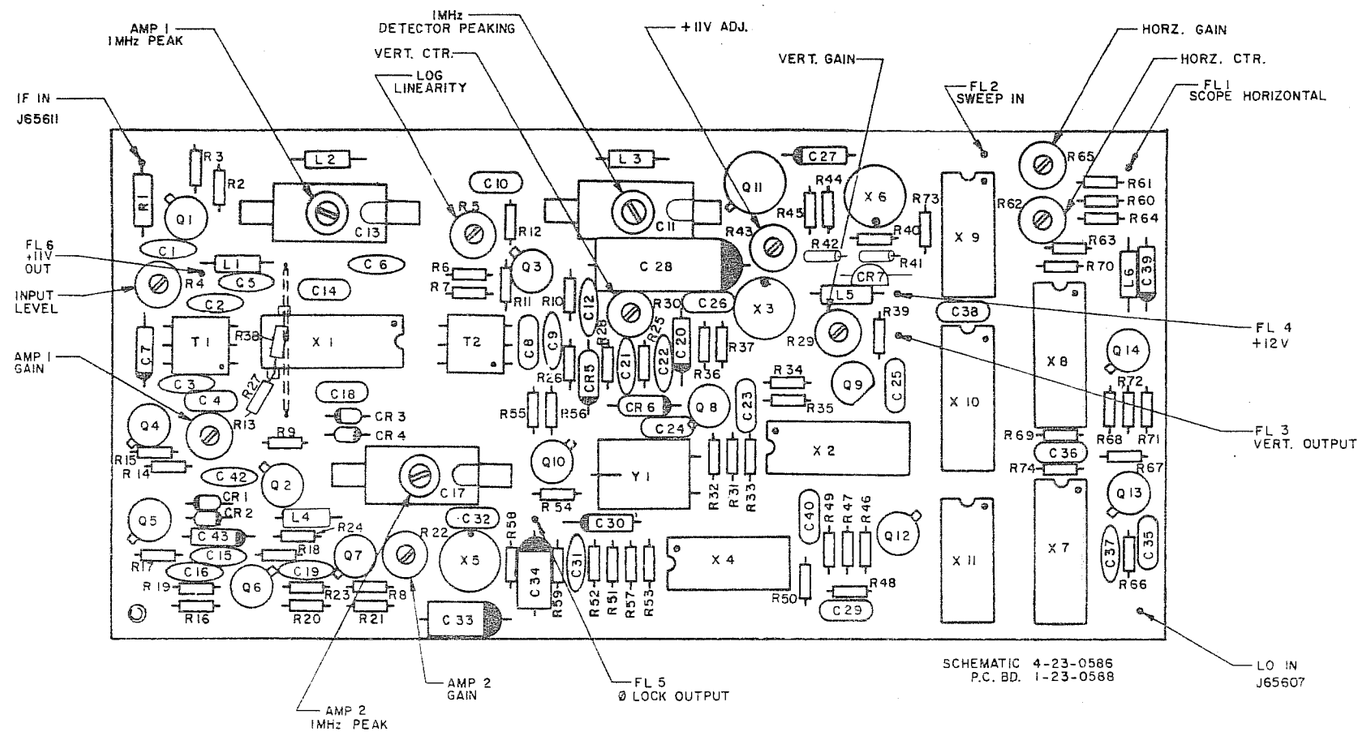

SCHEMATIC 4-23-0586
P.C. BD. 1-23-0568

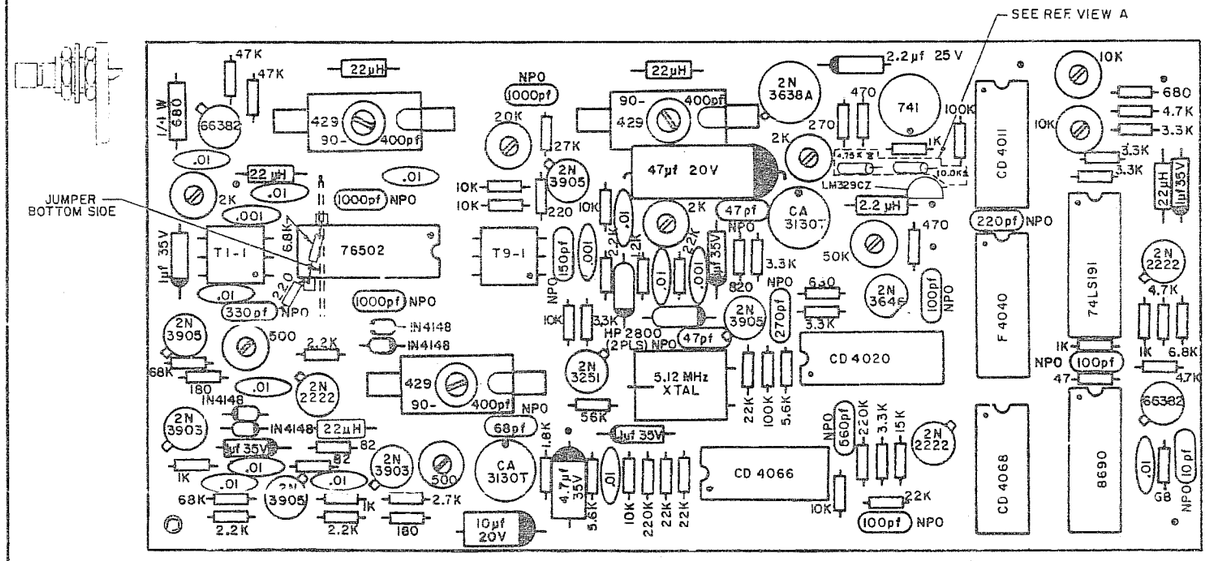

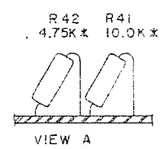

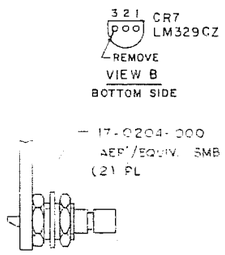

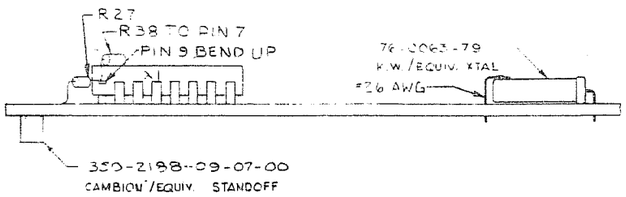

NOTES:

1. ALL RESISTORS ARE 1/8 W., 10% TOLERANCE EXCEPT AS NOTED.
2. ALL CAPACITOR VALUES ARE IN µF EXCEPT AS NOTED.
3. COMPONENT LEADS MAY EXTEND .04 TO .06 BEYOND BOTTOM OF BOARD AFTER SOLDERING.
4. MAXIMUM HEIGHT OF COMPONENTS TO BE .35 FROM COMPONENT SIDE OF BOARD.
5. RESISTORS MARKED WITH ASTERISK (*) ARE 1/4 W, 1%.

ITEM	REQ'D	PART NO.	DESCRIPTION
1	1	1-23-0594	SPECTRUM ANALYZER BD. #2 ASS'Y.

LIST OF MATERIALS

TOLERANCES: UNLESS OTHERWISE SPECIFIED ALL DIMENSIONS APPLY AFTER FINISH. DECIMALS: .xx = ± .010 .xxx = ± .005 ANGLES: ± 1/2° FRACTIONS: ± 1/64 SURFACE ROUGHNESS 125 REMOVE ALL BURRS

DRAWN DATE 7/14/77 — CHECKED DATE — APPROVED DATE

-IFR INC-
WICHITA, KANSAS

TITLE: SPECTRUM ANALYZER BOARD #2 ASSEMBLY

MATERIAL — FINISH

SIZE C — PART NUMBER 3-23-0594 — REV

SCALE 2:1 — WEIGHT — SHEET 1 OF 1

NEXT ASS'Y 1-23-0633 — QTY 1 — MODEL — FSCM/CAGE 00000 — APPLICATION

DATE	REV	CHANGE	APP'D
10/4/77	A	INCORP. ECN # 2419 LC	
1/3/78	B	INC. ECN # 2570 A.A.	
1/17/78	C	INC ECN 2709 JT	

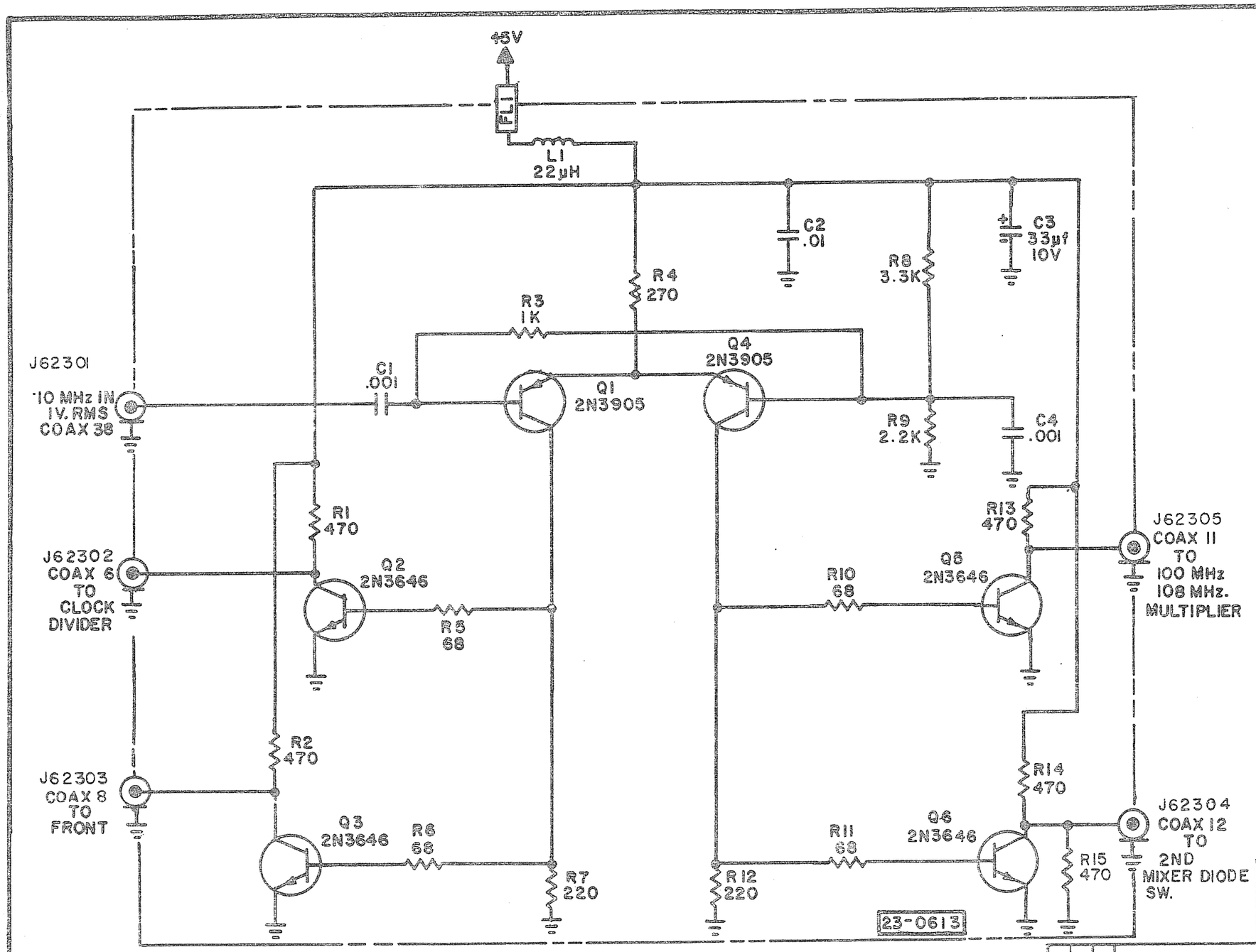

NOTES:

1. ALL RESISTORS ARE 1/8W, 10% AND VALUES ARE IN OHMS UNLESS OTHERWISE SPECIFIED.
2. ALL CAPACITORS ARE IN µf UNLESS OTHERWISE SPECIFIED.

LAST USED NOS.
C4, R15, Q6, L1

ITEM	REQ'D	PART NO.	DESCRIPT

LIST OF MATERIALS

23-0619	1	FP/AB 10008	MODEL
NEXT ASS'Y	QTY	APPLICATION	

TOLERANCES
UNLESS OTHERWISE SPECIFIED
ALL DIMENSIONS APPLY AFTER FINISH
DECIMALS .xx = ± .010 .xxx = ± .005
ANGLES ± 1/2°
FRACTIONS: ± 1/64
SURFACE ROUGHNESS 125
REMOVE ALL BURRS

MATERIAL
FINISH

DRAWN TJT 6-27-77 DATE
CHECKED HS. 7-1-77 DATE
APPROVED MO 7-8-77 DATE

IFR INC.
WICHITA KAN.

TITLE
TCXO
OUTPUT DISTRIBUTION
SCHEMATIC

SIZE B
PART NUMBER 2-23-0623
REV C
SCALE
WEIGHT
SHEET 1 OF 1

DATE	REV	CHANGE	APP'D
1/3/78	A	INC ECN # 2570 A.A.	WW
1-15-78	A-1	INC ECN 2709	W(1)

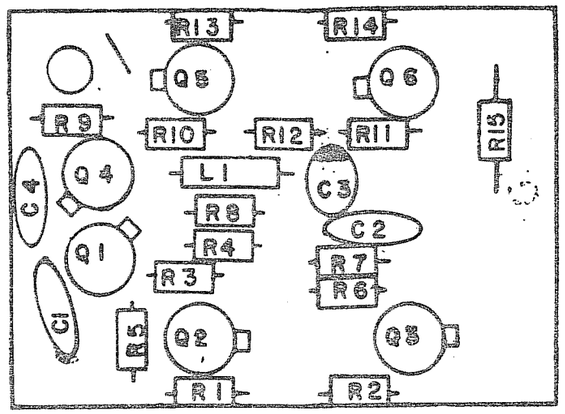

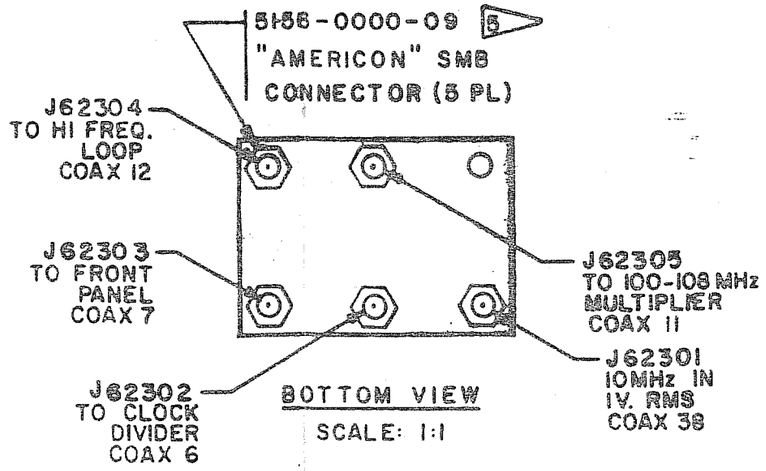

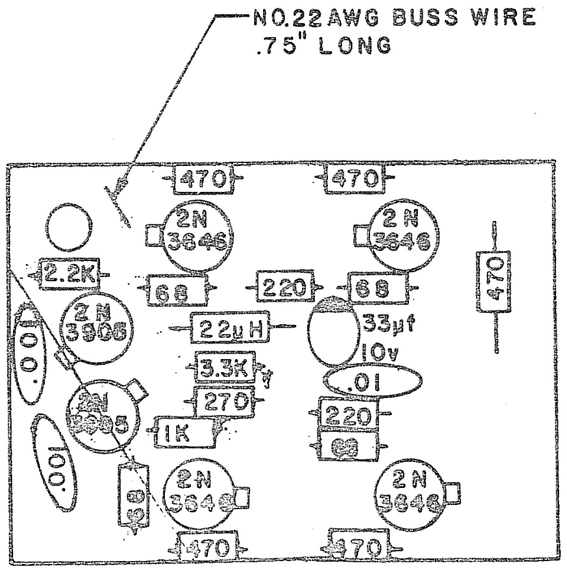

NOTES:

1. ALL RESISTORS ARE 1/8 W., 10% TOLERANCE EXCEPT AS NOTED.
2. ALL CAPACITOR VALUES ARE IN μF EXCEPT AS NOTED.
3. COMPONENT LEADS MAY EXTEND .04 TO .06 BEYOND BOTTOM OF BOARD AFTER SOLDERING.
4. MAXIMUM HEIGHT OF COMPONENTS TO BE .45 FROM COMPONENT SIDE OF BOARD.

5 TEFLON INSULATOR MUST BE CUT FLUSH WITH BASE OF CONNECTOR.

NEXT ASS'Y	QT'Y	MODEL	ITEM	REQ'D	PART NO.	DESCRIPTION
23-0620	1	FM/AM1000S				
			1	1	23-0619	TCXO P.C. BD ASS'Y

APPLICATION — LIST OF MATERIALS

TOLERANCES
UNLESS OTHERWISE SPECIFIED
ALL DIMENSIONS APPLY AFTER FINISH
DECIMALS: ± .000
ANGLES: ± 1/2°
FRACTIONS: ± 1/64
SURFACE ROUGHNESS 125
REMOVE ALL BURRS

DRAWN RKK DATE 3/18/77
CHECKED WW DATE 4-8-77
APPROVED MA DATE 4-9-77

INSTRUMENT FLIGHT RESEARCH CORPORATION
WICHITA, KANSAS

TITLE: TCXO OUTPUT DIST. AMP ASS'Y

MATERIAL
TREATMENT
FINISH

SIZE B | PART NUMBER 2-23-0619 | REV A-1
SCALE 2:1 & NOTED | WEIGHT — | SHEET 1 OF 1

CHANGE NOTICE #1

FM/AM-1000S, units S/N 801 through S/N 1615. The Duty Cycle Regulator Assembly has been changed to incorporate the modifications shown (also reference Assembly Dwg. No. 4-23-0384 [Fig. 6-15] and Schematic 3-23-0051 [Fig. 6-11] in July, 1978, printing of FM/AM-1000S manual).

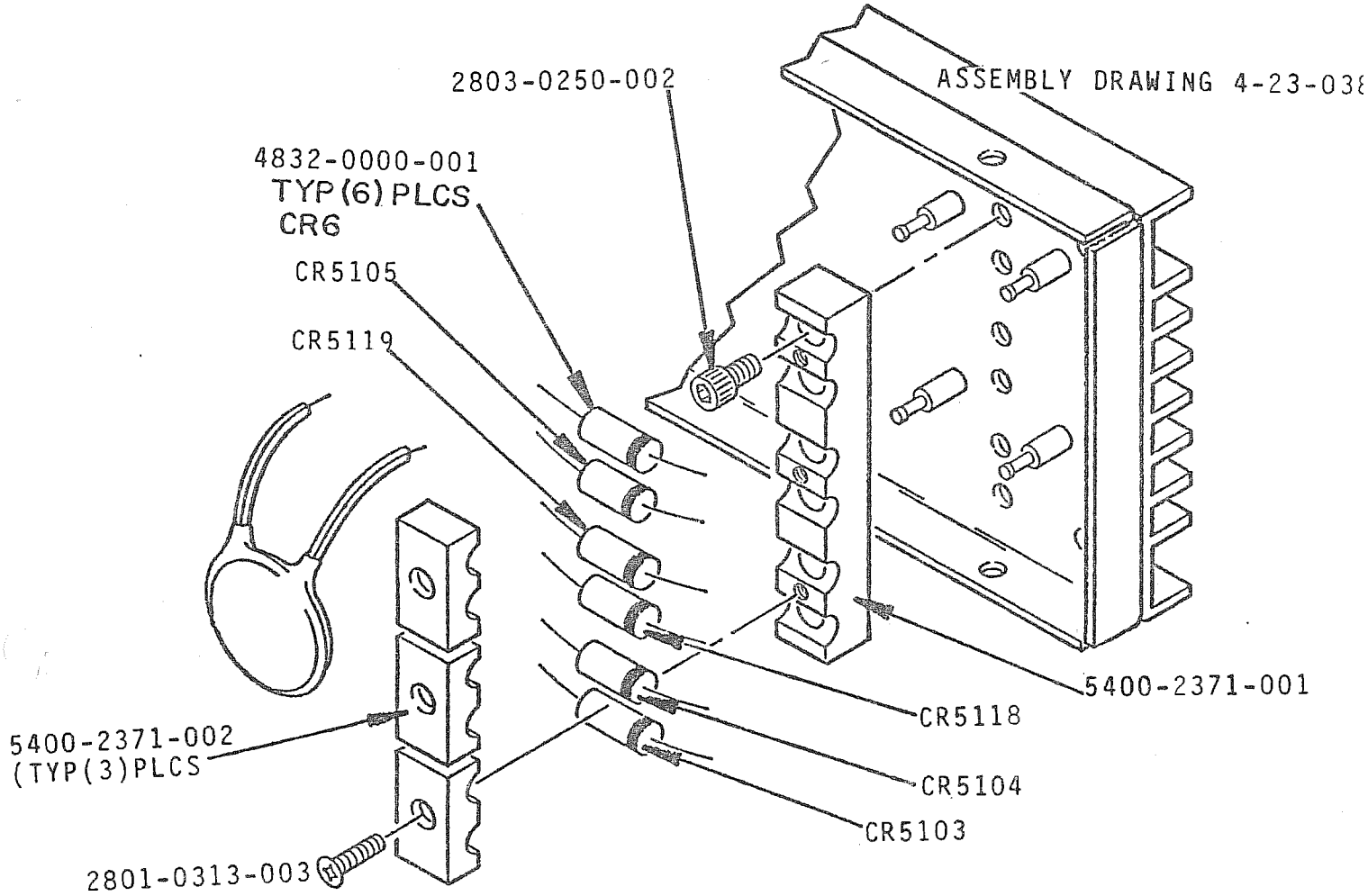

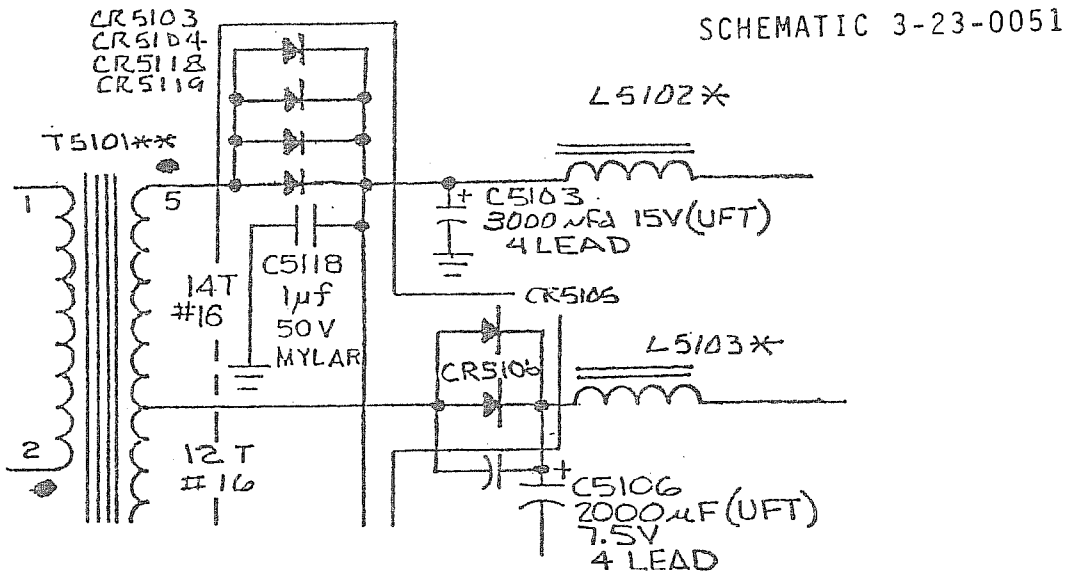

ASSEMBLY DRAWING 4-23-0384

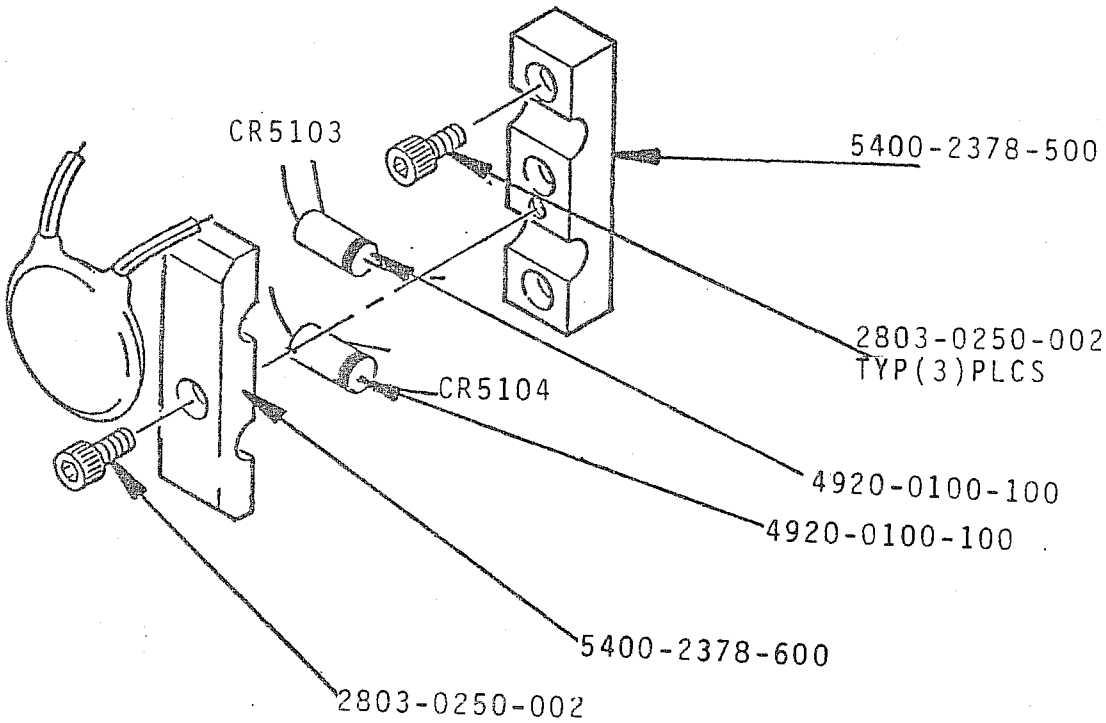

SCHEMATIC 3-23-0051

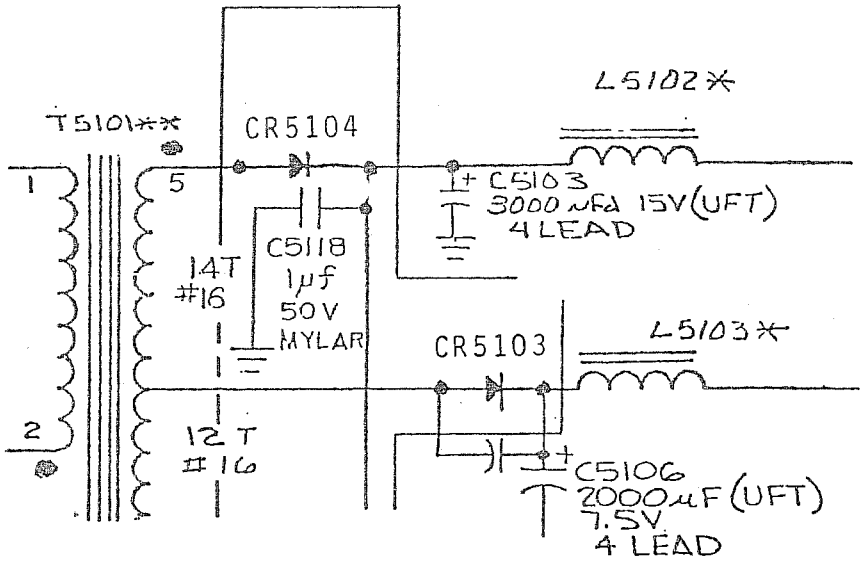

DUTY CYCLE REGULATOR - S/N 1286 and ON

CHANGE NOTICE #2

FM/AM-1000S, units S/N 801 through S/N 1615. The Rear Panel Assembly has been changed to incorporate the modifications shown (also reference Wiring Assembly, Dwg. No. 3-23-0380 [Fig. 6-5] and Schematic 3-23-0403 [Fig. 6-4] in July, 1978, printing of FM/AM-1000S manual).

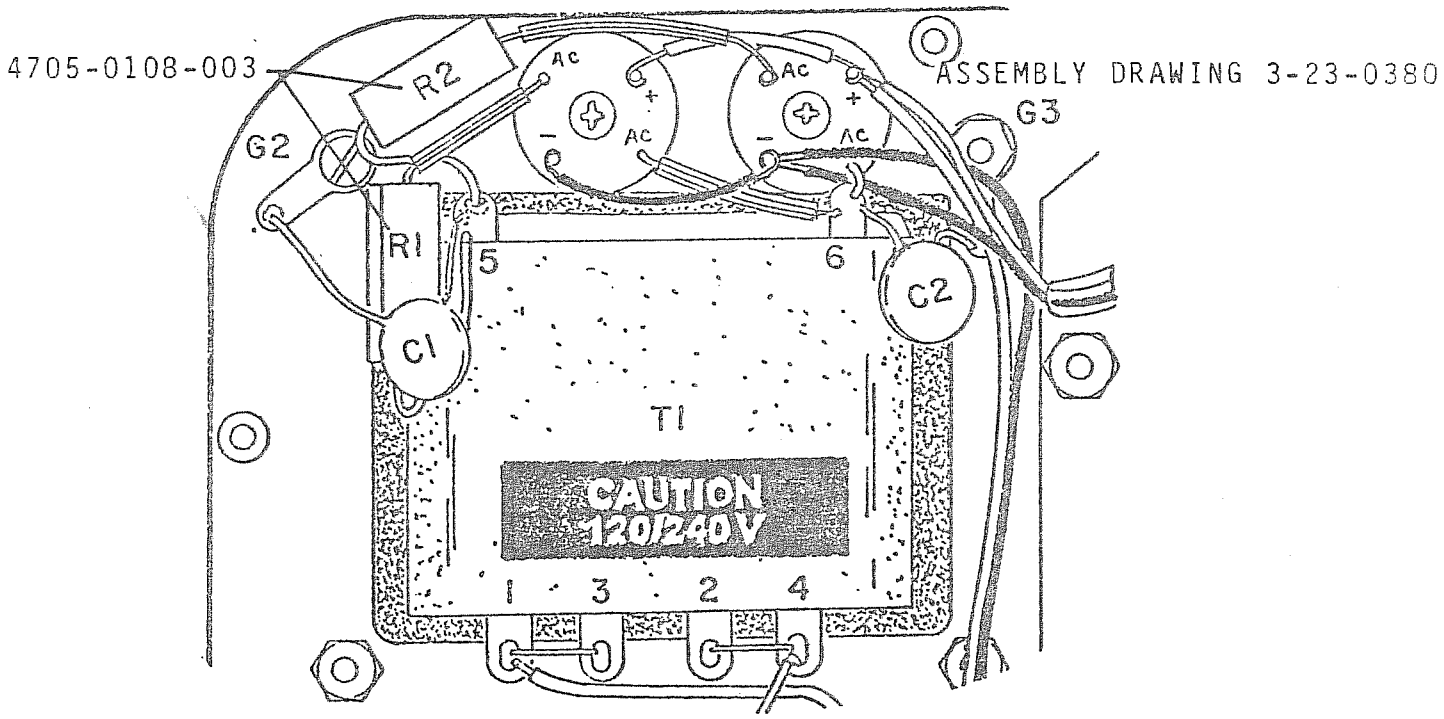

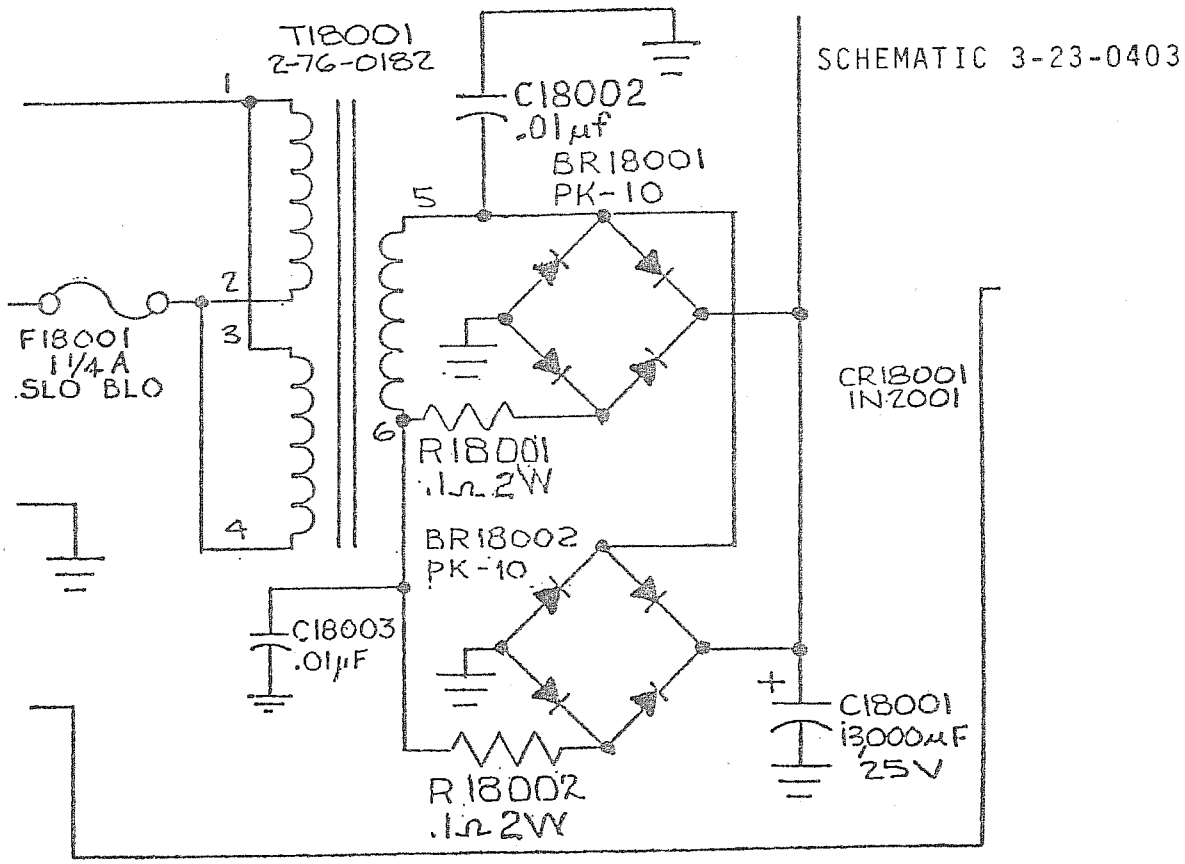

ASSEMBLY DRAWING 3-23-0380

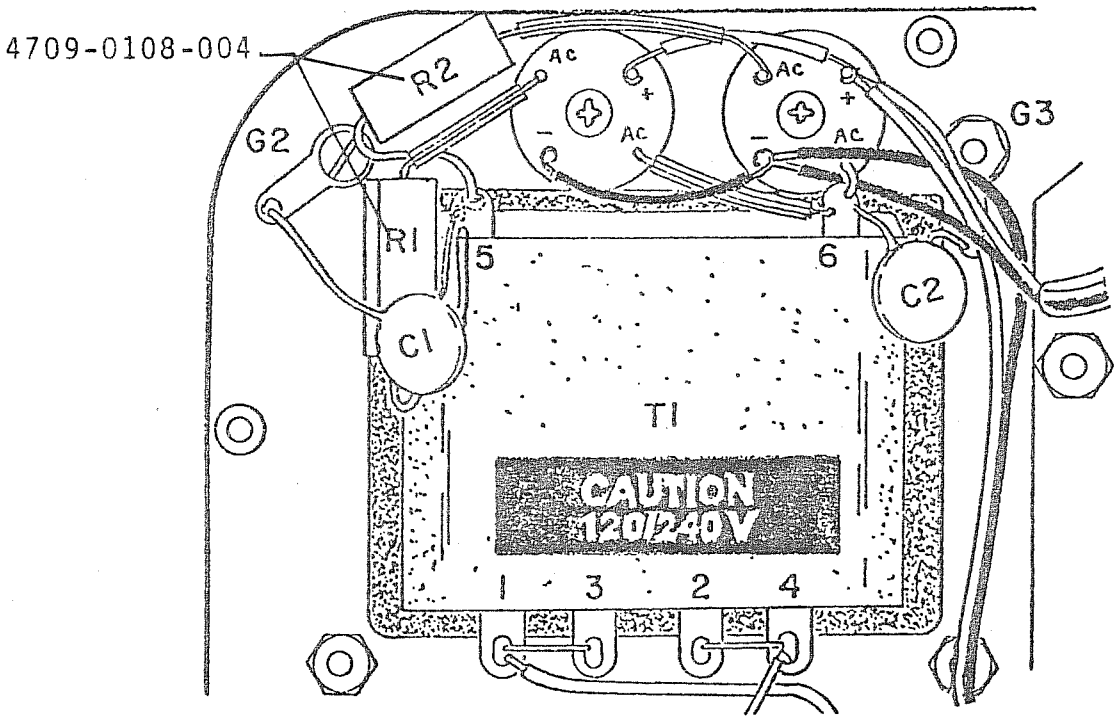

SCHEMATIC 3-23-0403

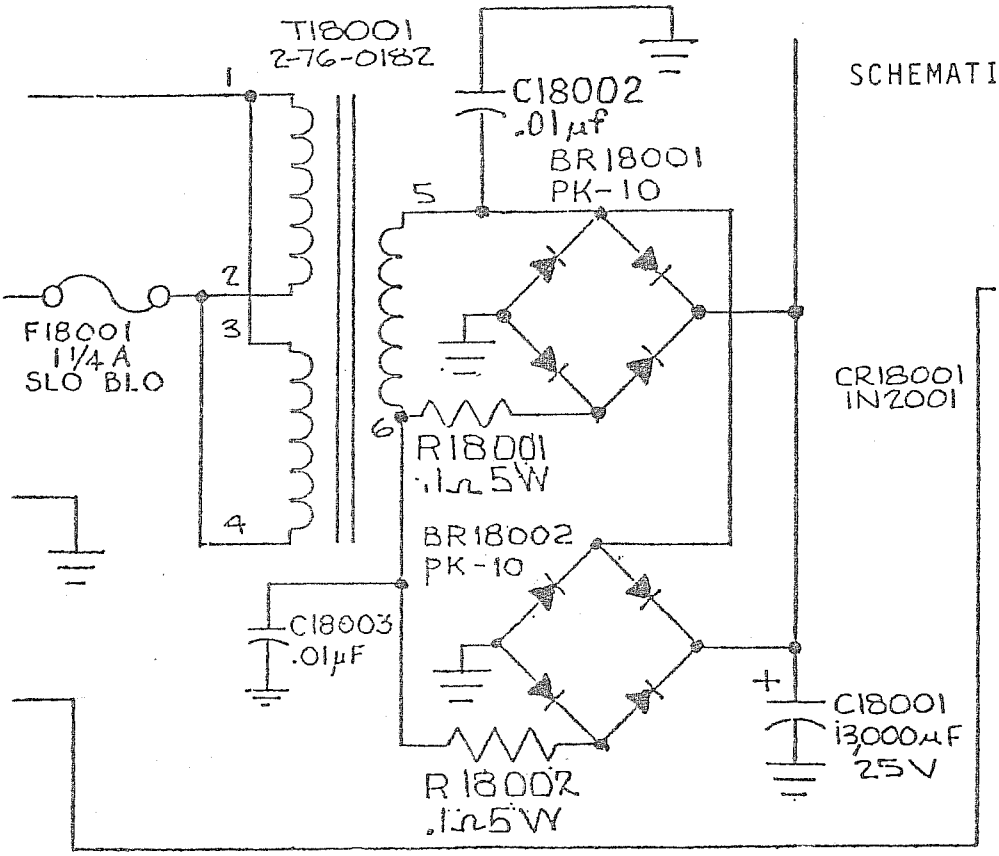

REAR PANEL - S/N 1391 and ON

DATE	REV	CHANGE	AP
1-6-75	A	INC. ECN # 116 LD	
1-21-75	B	INC. ECN # 211 LD	
1-25-75	C	INC. ECN # 240 LD	
2/20/75	D	INCORPORATED ECN # 329 SSD	
5/15/75	E	INC ECN 566, 705 & 724	
8-4-75	F	INCORP ECN # 881 SSD	
9-19-75	G	INCORP ECN # 991 SSD	
12-29-75	H	INCORP ECN # 1191 SSD	
3-3-76	J	INCORP. ECN # 1344	
4-8-76	K	INCORP. ECN # 1389	
7-27-76	L	INC ECN # 1583 & 1551 RKK	
11-15-76	M	INCORPORATED ECN # 1758 & 1645	
3/16/77	N	INC. ECN 1893	
5/17/78	P	INCORP ECN # 2733, 2881	
6/5/78	Q	INC. ECN # 2944 JGF	

EFFECTIVE: 1000A THRU S/N 1069

POSITION OF S3401

1	1.5 KHz
2	6 KHz
3	15 KHz
4	10.0V
5	1.0V } EXT. INPUT
6	.1 V } EXT. INPUT
7	.01 V } EXT. INPUT

POSITIONS OF S3403

1	TONE GEN. SWEEP
2	10 MS
3	1 MS
4	.1 MS
5	10 µS

1-23-0076 (P/L)
2-23-0299 (P.C.)

2-23-0127 (P.C.) 1-23-0

3 > 6.S.N. 1015 TO 1070: R3437 15.0K

4. ALL UNMARKED DIODES ARE 1N4148

NOTE:
1. ALL RESISTORS MARKED * ARE 1%
2. LIST OF LAST USED NO'S
   R3498 | L3402
   C3441 | RY3402
   Q3418
   CR3419
3. GND TO BE MADE ON PC BOARD NEAR Q3403 NOT ON FRAME
4. LEADS TO BE MADE BY MOST DIRECT PATH DO NOT PLACE NEAR GND'S & EACH OTHER NOT TO BE PLACED IN BUNDLE.

23-0194	1	FM AM 1000	-	1	23-0334	SCHEMATIC
NEXT ASSY	QTY	MODEL	ITEM	REQ'D	PART NO.	DESCRIPTION

APPLICATION — LIST OF MATERIALS

TOLERANCES: UNLESS OTHERWISE SPECIFIED ALL DIMENSIONS APPLY AFTER FINISH. DECIMALS: .XX ± .010 .XXX ± .005. ANGLES: ± 1/2°. FRACTIONS: ± 1/64. SURFACE ROUGHNESS 125. REMOVE ALL BURRS.

DRAWN 3-5-74 — CHECKED MG 8-27-5 — APPROVED

INSTRUMENT FLIGHT RESEARCH CORPORATION, WICHITA KANSAS

TITLE: FM-AM 1000 SCOPE SCHEMATIC

MATERIAL — TREATMENT — FINISH — SIZE C — PART NUMBER 3-23-0094 — SCALE — WEIGHT — SHEET 1 OF

DATE	REV	CHANGE	APPD
8/12/72	A	INCORP. ECN 2195 AA	
2/1/74	B	INCORP ECN 2363	
1/27/75	C	INC ECN 2656	
8/16/76	D	INC. ECN 2828	

NOTE

1. KEEP AWAY FROM GNDS & EACH OTHER. KEEP DIRECT. DO NOT BUNDLE.
2. ALL RESISTORS ARE 1/8W, 10% TOLERANCE EXCEPT AS NOTED.
3. RESISTORS IDENTIFIED WITH ASTERISK (*) ARE 1/4W, 1% TOLERANCE.

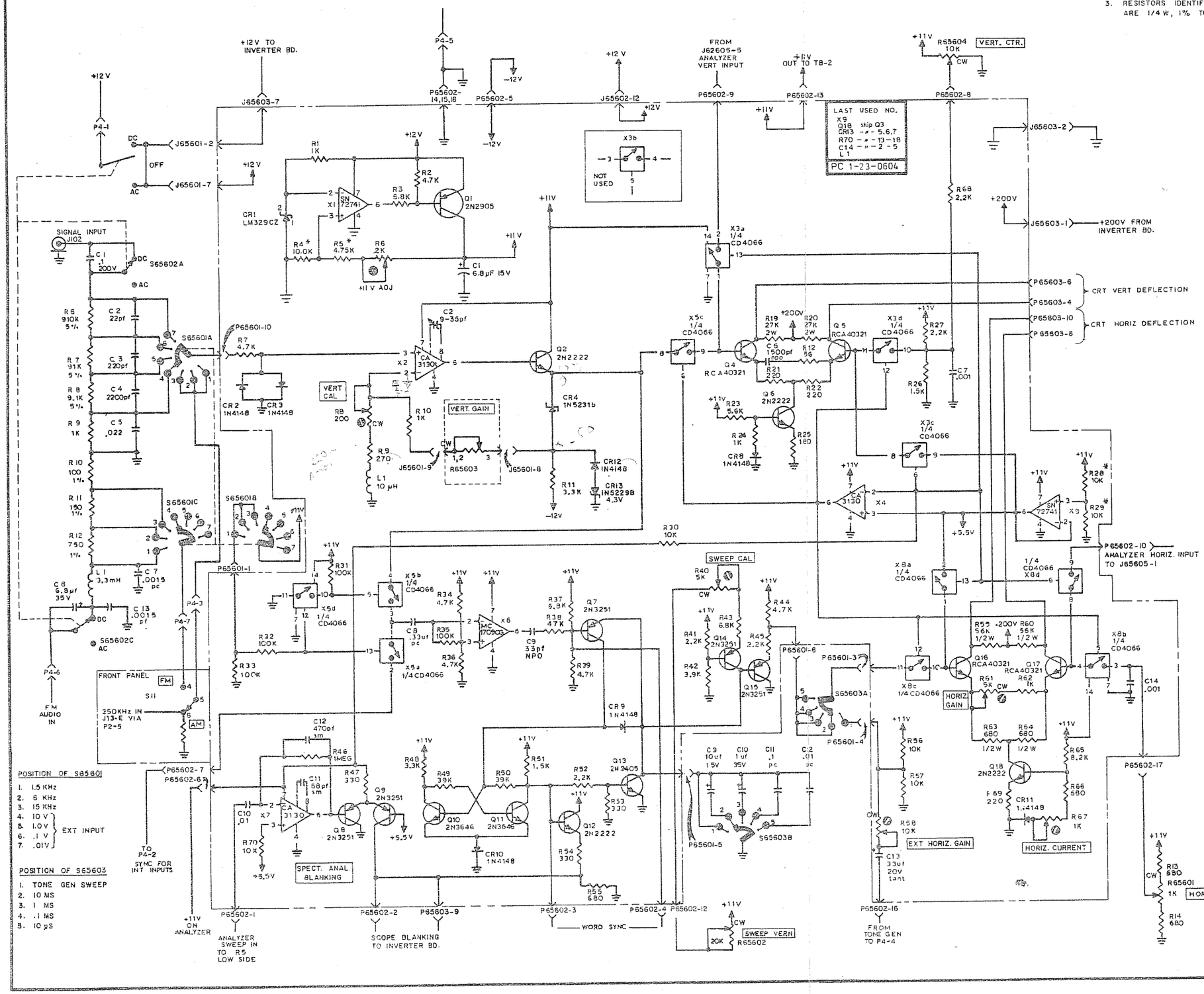

EFFECTIVE: FM/AM1000A S/N 1070 & ON

ITEM	REQ'D	PART NO	DESCRIPTION

LIST OF MATERIALS

TOLERANCES

- IFR INC -
WICHITA KANSAS

FM-AM 1000A SCOPE SCHEMATIC (WITH WORD SYNC & SPECTRUM ANALYZER PROVISIONS)

4-23-0612

D

1 of 1

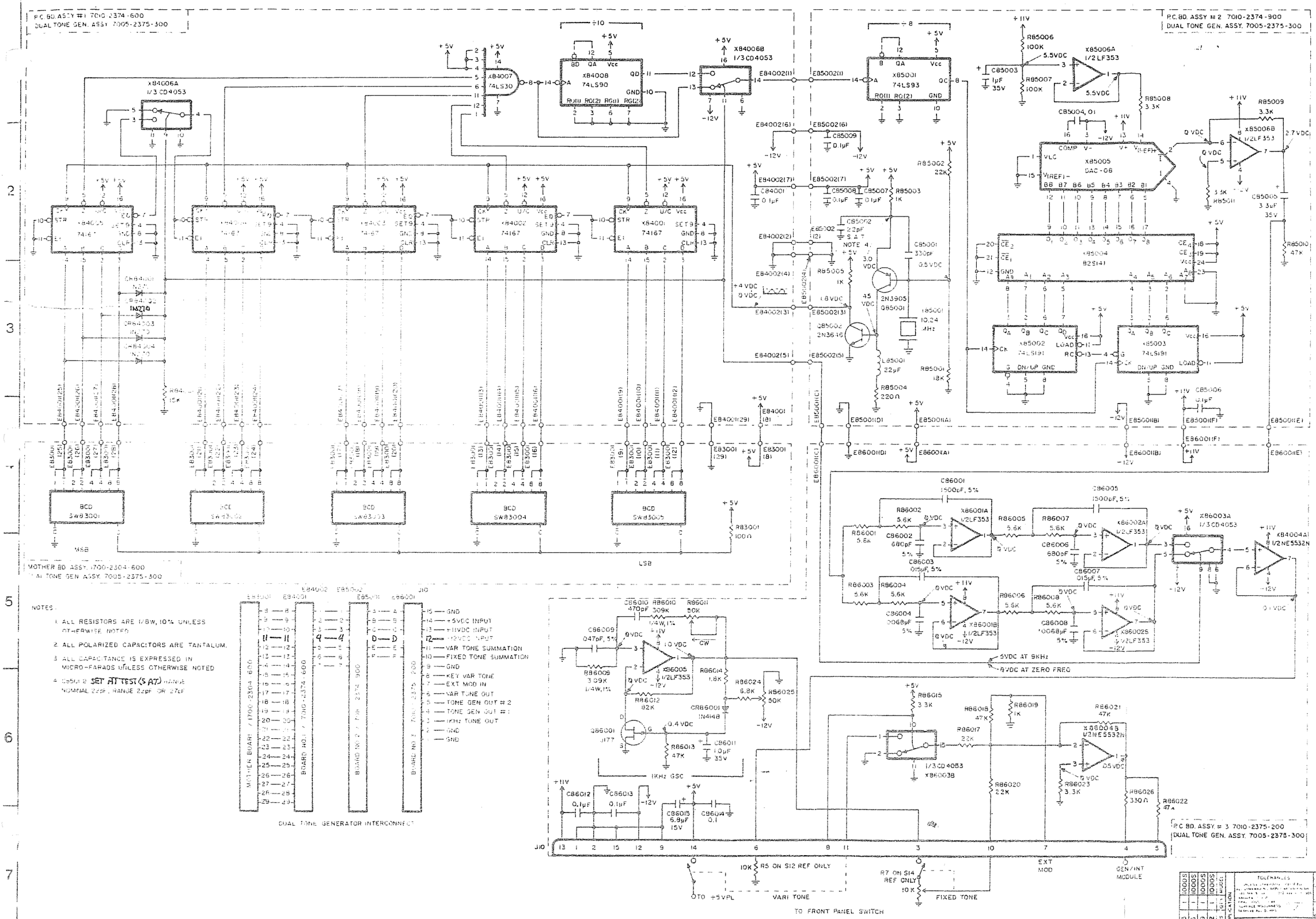

NOTES:

1. ALL RESISTORS ARE 1/8W, 10% UNLESS OTHERWISE NOTED.
2. ALL POLARIZED CAPACITORS ARE TANTALUM.
3. ALL CAPACITANCE IS EXPRESSED IN MICRO-FARADS UNLESS OTHERWISE NOTED.
4. C85012 SET AT TEST (S A7) NOMINAL NOMINAL 22pF, RANGE 22pF OR 27pF

DUAL TONE GENERATOR INTERCONNECT

25-753	1	1000S													
25-746	1	1000S													
25-749	1	1000S													
25-752	1	1000S													
PART NO.	QTY	MODEL													

APPLICATION

TOLERANCES

DRAWN ER 6/6/80

52

IRB INC. WICHITA KANSAS

DUAL TONE GENERATOR CIRCUIT SCHEMATIC FM-AM 10005

7005-2374-3

DATE	REV	CHANGE	APP'D

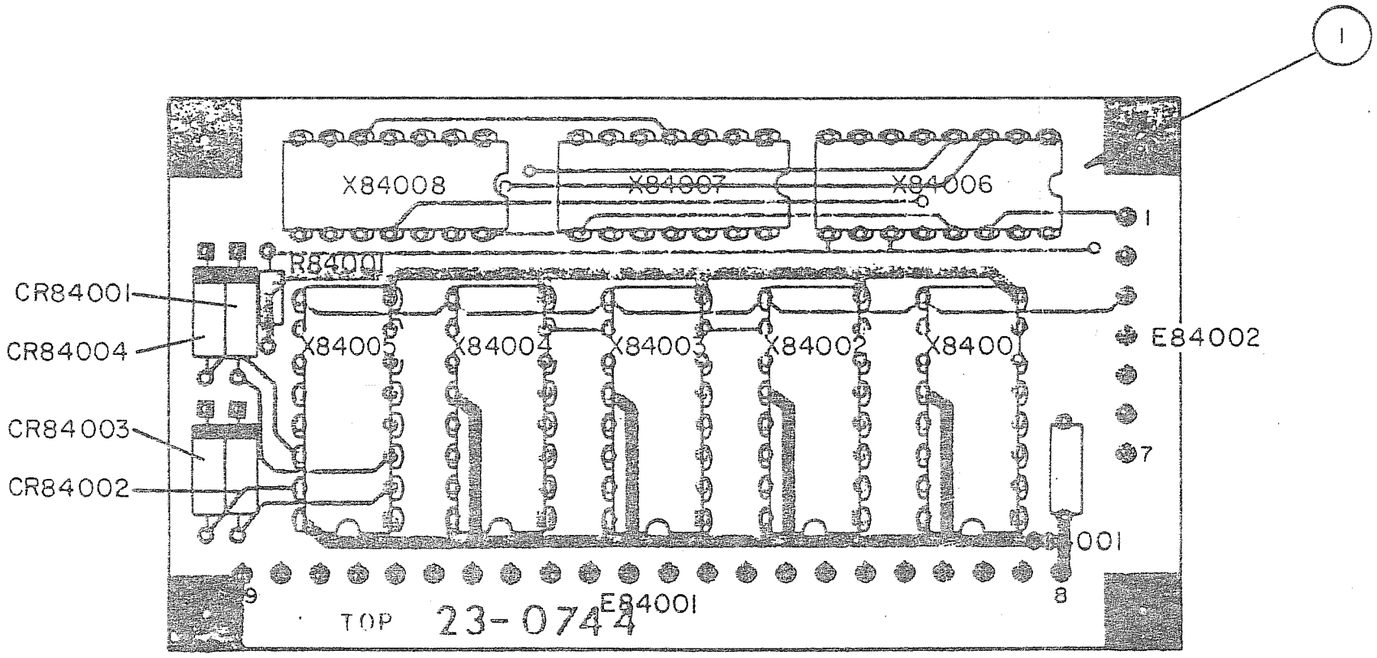

NOTES:

1. REFERENCE CIRCUIT SCHEMATIC 0000-2374-300.

ITEM	REQ'D	PART NO.	DESCRIPTION

LIST OF MATERIALS

23-753	1	1000S	
NEXT ASS'Y	QTY	MODEL	APPLICATION

TOLERANCES
UNLESS OTHERWISE SPECIFIED
ALL DIMENSIONS APPLY AFTER FINISH
DECIMALS: .xx = ± .010 .xxx = ± .005
ANGLES: ± 1/2°
FRACTIONS: ± 1/64
SURFACE ROUGHNESS 125 J
REMOVE ALL BURRS

DRAWN	DATE	ER 4-9-80
CHECKED	DATE	J. Adams 11-6-80
APPROVED	DATE	BOATH 11/6/80

-IFR INC-
WICHITA, KANSAS

TITLE
DUAL TONE GEN. BD. #1 ASSY.
FM-AM 1000 S

MATERIAL —//—
FINISH —//—

SIZE	PART NUMBER	REV
B	7010-2374-600	

SCALE	WEIGHT	
2 x 1	—//—	SHEET 1 OF 1

DATE	REV	CHANGE

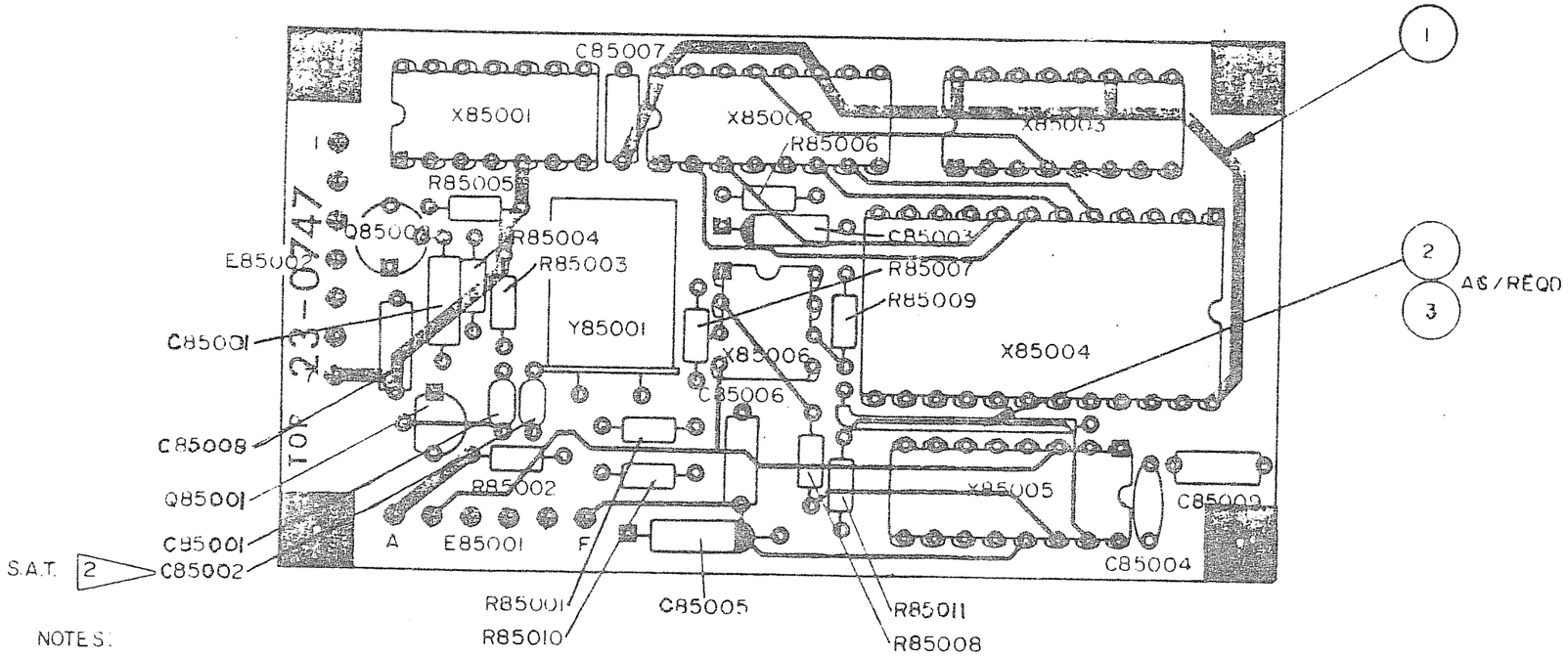

NOTES:

1. REFERENCE CIRCUIT SCHEMATIC 0000-2374-300.

2. C85002 SET AT TEST (S.A.T) RANGE: NOMINAL 22pF; RANGE 22pF OR 27pF.

ITEM	REQ'D	PART NO.	DESCRIPTION

LIST OF MATERIALS

23-753	1	1000S	
PARENT ASSY	QTY	MODEL	APPLICATION

TOLERANCES
UNLESS OTHERWISE SPECIFIED
ALL DIMENSIONS APPLY AFTER FINISH
DECIMALS: .xx = ± .010 .xxx = ± .005
ANGLES: ± 1/2°
FRACTIONS: ± 1/64
SURFACE ROUGHNESS 125 J
REMOVE ALL BURRS

DRAWN ER 4/9/80 DATE
CHECKED J Adams 11-6-80 DATE
APPROVED Boroth 11/6/80 DATE

-IFR INC-
WICHITA, KANSAS

TITLE
DUAL TONE GEN. BD. #2 ASSY.
FM-AM 1000S

MATERIAL —"—
FINISH —"—

SIZE B
PART NUMBER 7010-2374-900
SCALE 2 x 1
WEIGHT —"—
SHEET 1 OF 54

DATE	REV	CHANGE	APP'D
2-12-81	A	INC ECN 3591 RF	

TOP VIEW

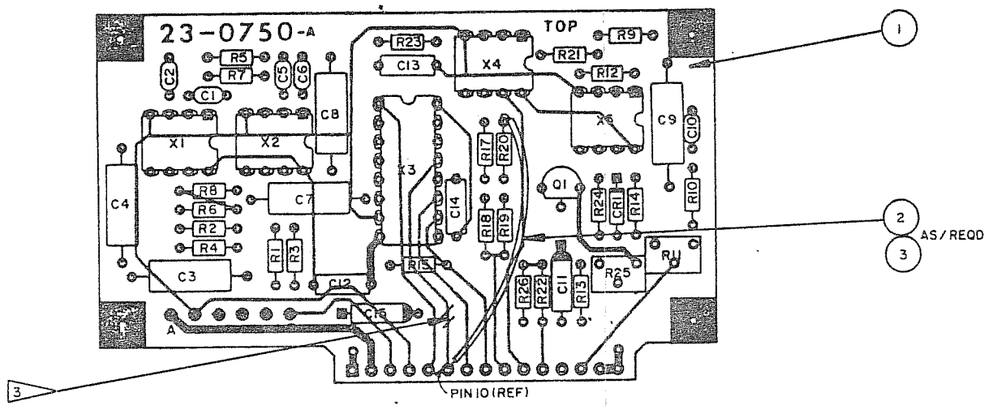

BOTTOM VIEW

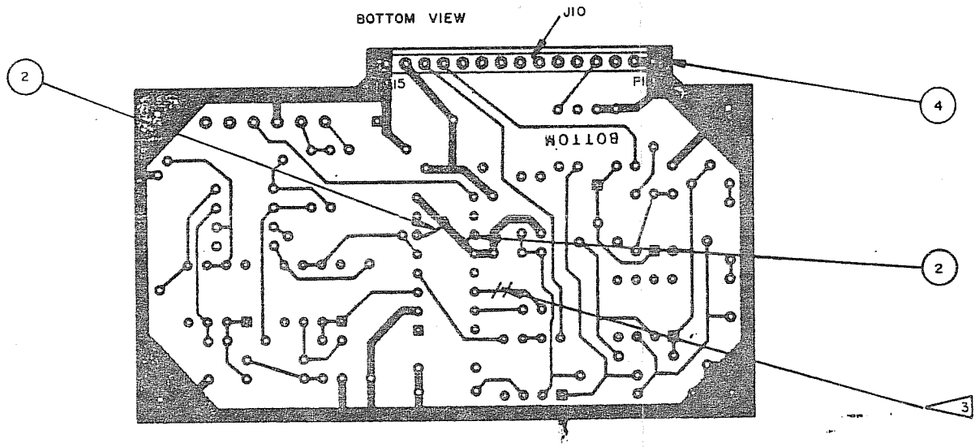

NOTES:

1. FOR CABLE INTERCONNECT SEE 0000-2364-001.
2. REFERENCE CIRCUIT SCHEMATIC 0000-2374-300.
3. CUT AWAY PATHWORK AS INDICATED, TWO PLACES.

ITEM	REQ'D	PART NO.	DESCRIPTION

LIST OF MATERIALS

23-753	1	10009	
NEXT ASSY	QTY	MODEL	

APPLICATION

TOLERANCES
UNLESS OTHERWISE SPECIFIED
ALL DIMENSIONS APPLY AFTER FINISH
DECIMALS: .XX = ± .010 .XXX = ± .005
ANGLES: ± 1/2°
FRACTIONS: ± 1/64
SURFACE ROUGHNESS 125
REMOVE ALL BURRS

DRAWN ER 4/11/80 DATE
CHECKED J. Adams 11-6-80 DATE
APPROVED Borom 11/6/80 DATE

- ISI INC -
WICHITA, KANSAS

TITLE
DUAL TONE GEN P.C. BD. 993 ASSY.
FM-AM 1000 S

MATERIAL —
FINISH —

SIZE C
PART NUMBER 7010-2373-200
REV A
SCALE 2 : 1
WEIGHT —
SHEET 1 OF 1

DATE	REV	CHANGE

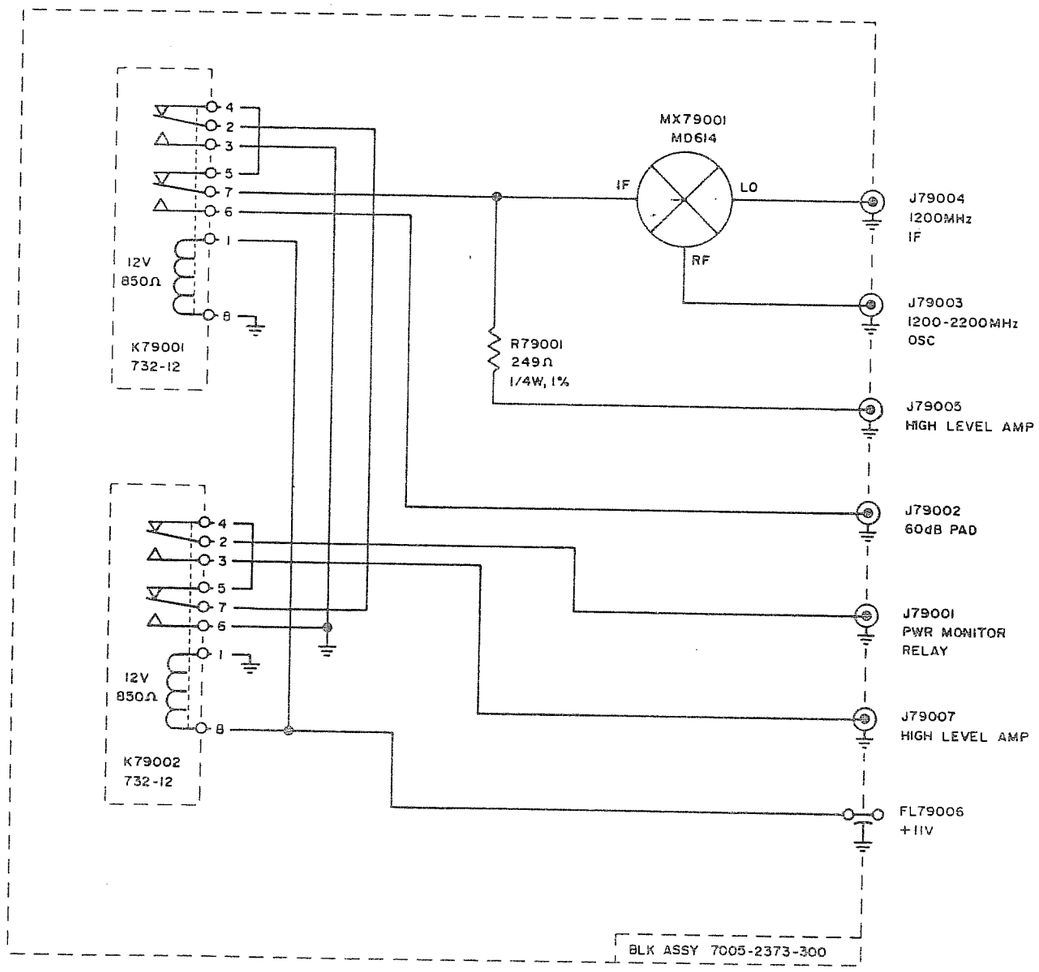

NOTES:

1. LAST REF. DES. USED:

   FL79006
   J79007
   K79002
   MX79001
   R79001

2. REF. DES. NOT USED:

   FL79001
   FL79002
   FL79003
   FL79004
   FL79005
   J79006

ITEM	REQ'D	PART NO.	DESCRIPTION

LIST OF MATERIALS

23-7333	1	10005	
NEXT ASSY	QTY	MODEL	APPLICATION

TOLERANCES
UNLESS OTHERWISE SPECIFIED
ALL DIMENSIONS APPLY AFTER FINISH
DECIMALS .xx = ± .010 .xxx = ± .005
ANGLES ± 1/2°
FRACTIONS ± 1/64
SURFACE ROUGHNESS 125
REMOVE ALL BURRS

DRAWN ER 3/31/80
CHECKED
APPROVED 11/6/80

-IFR 199C-
WICHITA, KANSAS

TITLE
FIRST MIXER & SWITCH
CIRCUIT SCHEMATIC
FM-AM 1000 S

MATERIAL —/—
FINISH —/—

SIZE C
PART NUMBER 0000-2377-100
SCALE NONE
WEIGHT —/—
SHEET 1 OF

DATE	REV	CHANGE	APP'D
3 1 81	A	INC ECN 3636 RF	

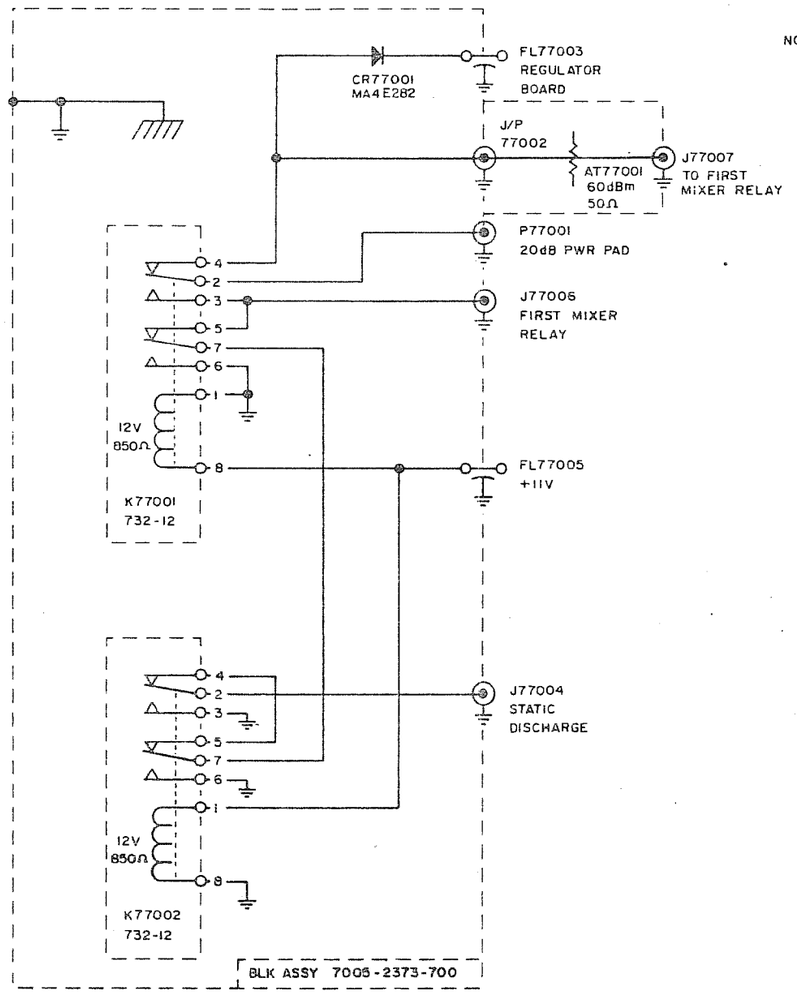

NOTES:

1. LAST REF. DES. USED:

   AT77001
   CR77001
   FL77005
   J77006
   K77002
   P77001

2. REF. DES. NOT USED:

   FL77001
   FL77002
   FL77004
   J77003
   J77005

ITEM	REQ'D	PART NO.	DESCRIPTION

LIST OF MATERIALS

23-737	1	1000S
NEXT ASSY	QTY	MODEL

APPLICATION

TOLERANCES
UNLESS OTHERWISE SPECIFIED
ALL DIMENSIONS APPLY AFTER FINISH
DECIMALS .xx = ± .010 .xxx = ± .005
ANGLES: ± 1/2°
FRACTIONS ± 1/64
SURFACE ROUGHNESS 125
REMOVE ALL BURRS

DRAWN ER 3/28/80 DATE
CHECKED J. Adams 4-6-80 DATE
APPROVED Kubota 4/6/80 DATE

-IFR INC-
WICHITA, KANSAS

TITLE
POWER MONITOR ASSY
CIRCUIT SCHEMATIC
FM-AM 1000 S

MATERIAL //
FINISH //

SIZE C
PART NUMBER 0000-2377-200
REV A
SCALE NONE
WEIGHT //
SHEET 1 OF 1

DATE	REV	CHANGE
3 1 81	A	INC. ECN 3636 RF

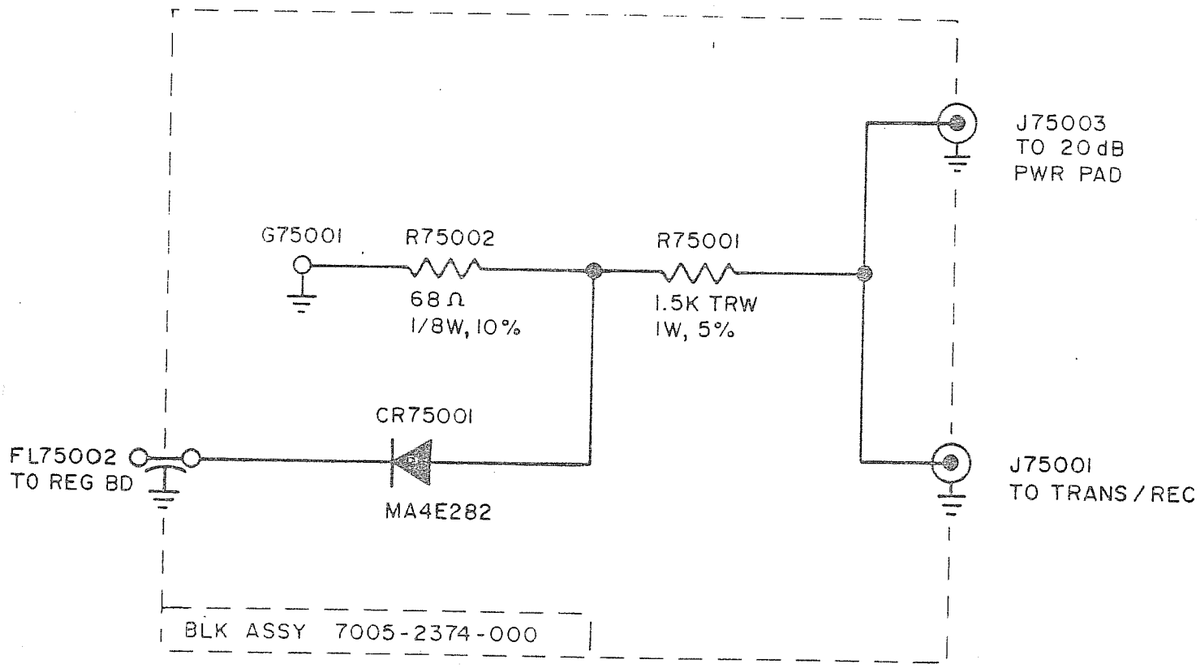

NOTES:

1. LAST REF DES USED:

   CR75001
   FL75002
   G75001
   J75003
   R75002

2. REF DES NOT USED:

   FL75001
   J75002

ITEM	REQ'D	PART NO.	DESCRIPTION

LIST OF MATERIALS

1000S	MODEL
1	QT'Y
23-740	NEXT ASSY

APPLICATION

TOLERANCES
UNLESS OTHERWISE SPECIFIED
ALL DIMENSIONS APPLY AFTER FINISH
DECIMALS: .XX = ± .010 .XXX = ± .005
ANGLES: ± 1/2°
FRACTIONS: ± 1/64
SURFACE ROUGHNESS 125
REMOVE ALL BURRS

DRAWN DATE: ER 4/3/80
CHECKED DATE: J.Adams 11-6-80
APPROVED DATE: Borcita 11/6/80

-IFR INC-
WICHITA, KANSAS

TITLE
XMTR SENSOR ASSY
CIRCUIT SCHEMATIC
FM-AM 1000 S

MATERIAL: #
FINISH: #

SIZE: B
PART NUMBER: 0000-2377-300
SCALE: NONE
WEIGHT: #
SHEET 1 OF

DATE	REV	CHANGE	APP'D

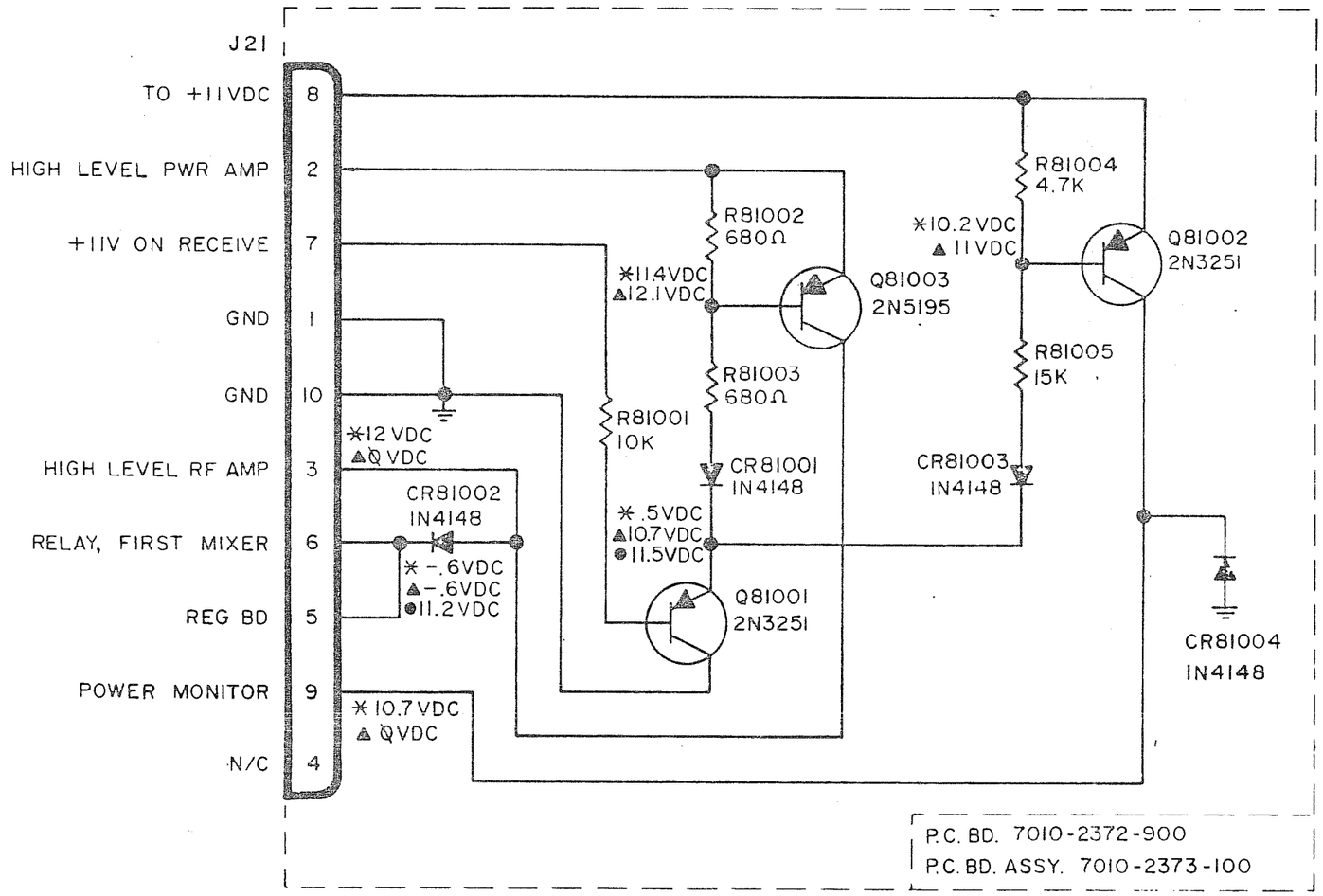

NOTES:

1. TEST VOLTAGE VALUE LEGEND:
   - ✳ GEN VDC
   - ▲ REC VDC
   - ● HIGH LEVEL VDC
2. LAST REF. DES. USED:
   - CR81004
   - J21
   - Q81003
   - R81005

ITEM	REQ'D	PART NO.	DESCRIPTION

LIST OF MATERIALS

23-731	1	1000S
NEXT ASSY	QTY	MODEL

APPLICATION

TOLERANCES
UNLESS OTHERWISE SPECIFIED
ALL DIMENSIONS APPLY AFTER FINISH
DECIMALS: .xx = ± .010 .xxx = ± .005
ANGLES: ± 1/2°
FRACTIONS: ± 1/64
SURFACE ROUGHNESS: 125
REMOVE ALL BURRS

DRAWN DATE: ER 5/20/80
CHECKED DATE: J Adams 11-6-80
APPROVED DATE: [illegible]

-IFR INC-
WICHITA, KANSAS

TITLE: RELAY DRIVER CIRCUIT SCHEMATIC FM-AM 1000 S

MATERIAL: ——//——
FINISH: ——//——

SIZE: B
PART NUMBER: 0000-2372-800
REV:
SCALE: NONE
WEIGHT: ——//——
SHEET 1 OF 1

DATE	REV	CHANGE

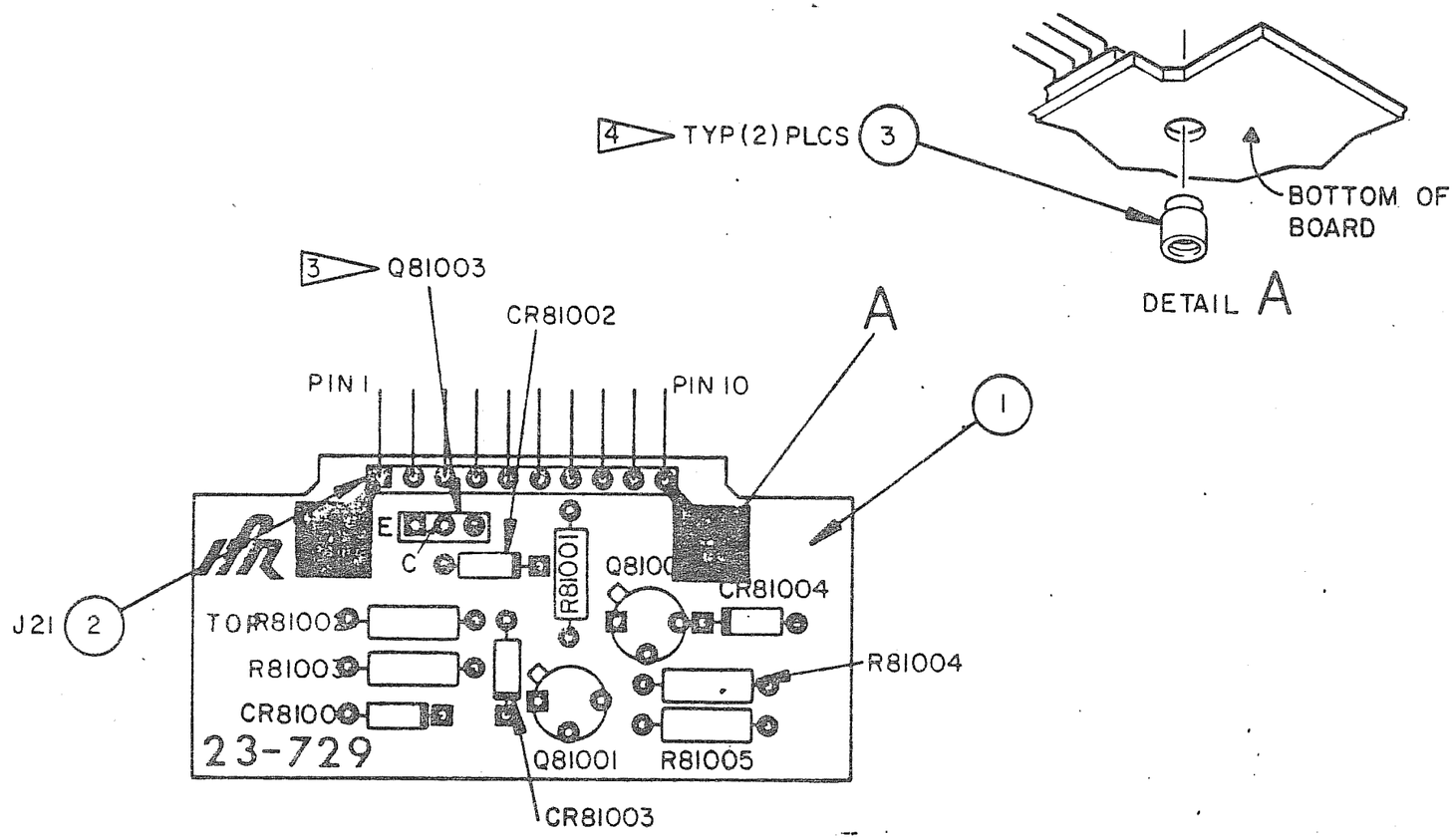

NOTES:

1. FOR CABLE INTERCONNECT SEE 0000-2364-001.
2. REFERENCE CIRCUIT SCHEMATIC 0000-2372-800.
3. INSTALL Q81003 TRANSISTOR WITH METAL BACK TOWARDS J21 CONNECTOR.
4. SOLDER ITEM 3 (# 2800-0000-007) IN PLACE ON BOTTOM OF BOARD.

ITEM	REQ'D	PART NO.	DESCRIPTION

LIST OF MATERIALS

23-641	1	1000S	
NEXT ASS'Y	QTY	MODEL	APPLICATION

TOLERANCES
UNLESS OTHERWISE SPECIFIED
ALL DIMENSIONS APPLY AFTER FINISH
DECIMALS .XX ± .010 .XXX ± .005
ANGLES ± 1/2°
FRACTIONS ± 1/64
SURFACE ROUGHNESS 125
REMOVE ALL BURRS

MATERIAL —//—
FINISH —//—

DRAWN ER 5/21/80
CHECKED J. Adams 11-6-80
APPROVED Borotta 11/6/80

-IFR INC-
WICHITA, KANSAS

TITLE
RELAY DRIVER P.C. BD. ASSY.
FM-AM 1000 S

SIZE B
PART NUMBER 7010-2373-100
SCALE 2 x 1
WEIGHT —//—
SHEET 1 OF

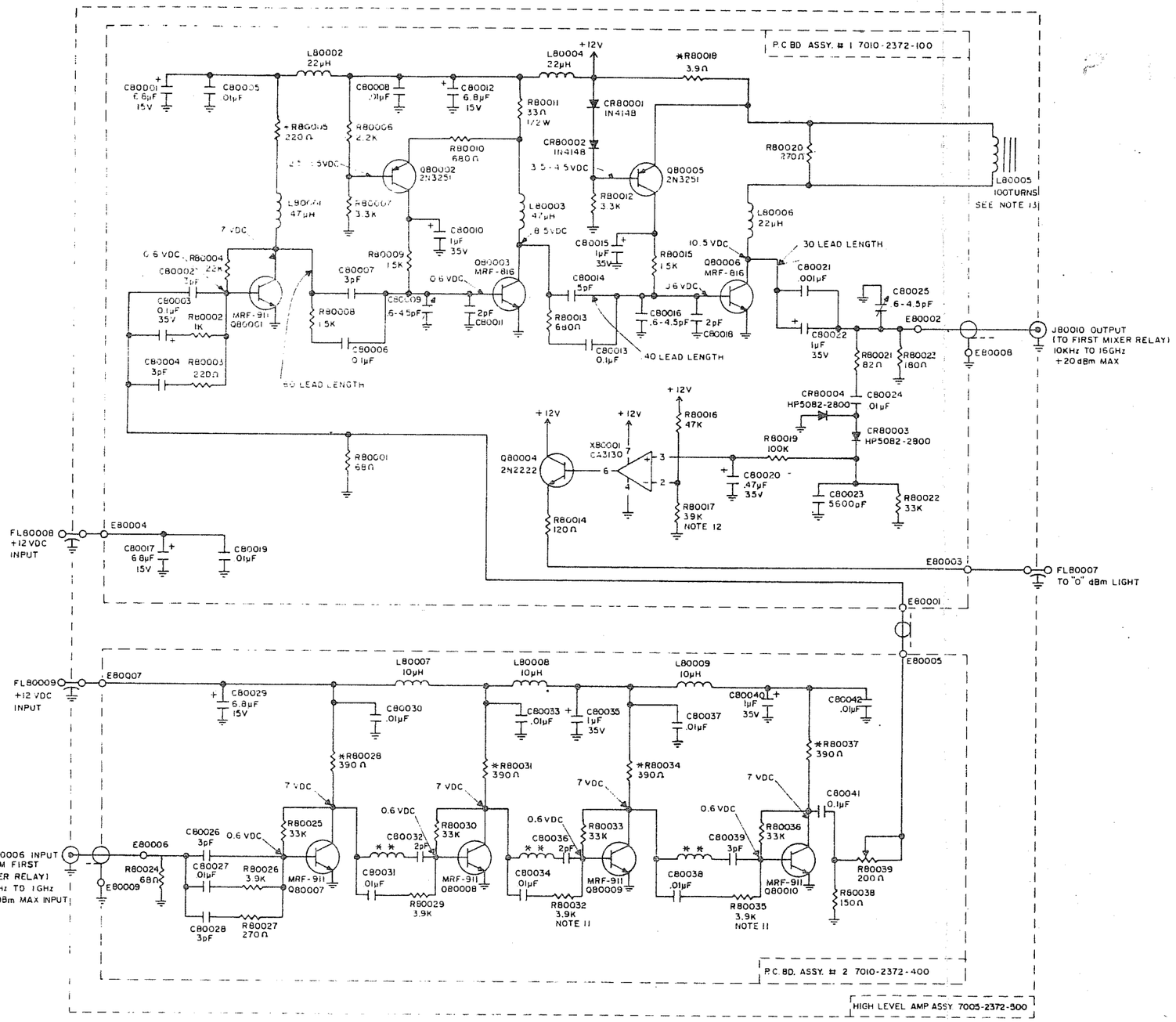

NOTES:

1. LAST REF. DES. USED:

C80042	L80009
CR80004	Q80010
E80009	R80039
FL80009	X80001
J80010	

2. REF. DES. NOT USED.

FL80001	J80002
FL80002	J80003
FL80003	J80004
FL80004	J80005
FL80005	J80007
FL80006	J80008
J80001	J80009

3. ALL RESISTORS ARE 1/8W, 10% UNLESS OTHERWISE NOTED.
4. ALL RESISTORS MARKED WITH AN. ASTERISK (*) ARE 1/4W, 10%.
5. ALL RESISTANCE IS EXPRESSED IN OHMS, UNLESS OTHERWISE NOTED.
6. ALL CAPACITANCE IS EXPRESSED IN MICRO-FARADS, UNLSS OTHERWISE NOTED.
7. ALL POLARIZED CAPACITORS ARE TANTALUM
8. ALL .01µF CAPACITORS ARE DISC.
9. ALL CAPACITORS LESS THAN .01 ARE NPO.
10. DOUBLE ASTERISK (* *) INDICATES THE STRAY INDUCTANCE FROM CAPACITOR LEAD 0.6" LONG (TYP 3 PLCS) - C80032, C80036 & C80039
11. R80032 AND R80035 ON P.C. BD. # 2 ARE SET AT TEST (S.A.T.) RESISTORS.
    NOMINAL VALUE INSTALLED IS 3.9K
    SELECT RANGE: 1.5K TO 3.9K 1/8W, 10%
    4701-0152-003 - 1.5K
    4701-0182-003 - 1.8K
    4701-0222-003 - 2.2K
    4701-0272-003 - 2.7K
    4701-0332-003 - 3.3K
    4701-0392-003 - 3.9K
    R80032 AND R80035 ARE SELECTED TO FREQUENCY RESPONSE.
12. R80017 ON P.C. BD. # 1 IS A SET AT TEST (S.A.T.) RESISTOR
    NOMINAL VALUE INSTALLED IS 39K, 1/8W, 10%.
    SELECT RANGE: 39K OR 33K, 1/8W, 10%.
    4701-0393-003 - 39K
    4701-0333-003 - 33K
    R80017 IS SELECTED FOR THE "0" dBm INDICATOR LIGHT ADJUSTMENT.
13. L8005 INDUCTANCE VALUE: 3.0 mH ±25% MEASURED AT 1KHz SERIES CIRCUIT/ OR EQUIVALENT

23-721	1	10005	
23-724	1	10005	
NEXT ASS'Y	QTY	MODEL	APPLICATION

TOLERANCES
DECIMALS
ANGLES
FRACTIONS
SURFACE FINISHES
REMOVE ALL BURRS
MATERIAL
61

DRAWN ER 5/29/80
J Adams 6-6-80

-IFR INC-
HIGH LEVEL AMP
CIRCUIT SCHEMATIC
FM-AM 10005
0000-2371-000
SHEET 1 OF