ICOM INSTRUCTIONS

HF AUTOMATIC ANTENNA TUNER

AH-3

Thank you for purchasing the **AH-3 HF AUTOMATIC ANTENNA TUNER.** The **AH-3** matches your transceiver to an antenna more than 3 m/10 ft long (3.5 MHz and above) or more than 12 m/40 ft long (1.8 MHz and above).

Please read this manual thoroughly before **AH-3** installation and operation.

DANGER!

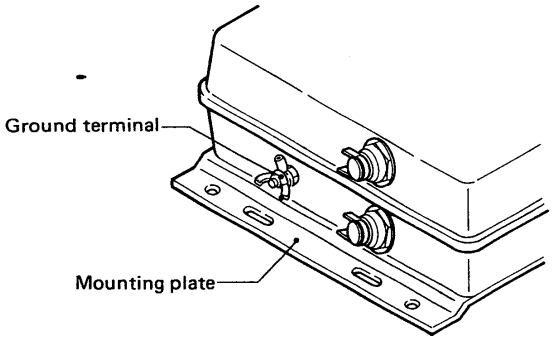

NEVER USE THIS TUNER WHEN IT IS UNGROUNDED. ALWAYS GROUND THE TUNER THROUGH THE GROUND TERMINAL BEFORE OPERATING. DO NOT use the mounting plates for grounding.

NEVER TRANSMIT OR TUNE WITHOUT AN ANTENNA. Failure to use an antenna will damage the tuner.

HIGH VOLTAGE! NEVER TOUCH THE ANTENNA WHILE TRANSMITTING OR TUNING. Place the antenna in a position where you are sure it will not be touched.

FEATURES

•WIDE TUNING RANGE

The AH-3 provides reliable matching for frequencies from 3.5 MHz to 30 MHz when using at least a 3 m (10 ft) antenna such as the AH-2b ANTENNA ELEMENT (with a 50 cm lead-in wire).

When operating above 1.8 MHz, use at least a 12 m (40 ft) antenna.

•AUTOMATIC DIGITAL CONTROL TUNING

The built-in 8-bit microcomputer chooses the lowest SWR condition from more than 260,000 different LC (coil/capacitor) combinations.

•EIGHT-FREQUENCY MEMORY FOR FAST TUNING

The LC combinations of 8 previously used frequencies are automatically memorized in the AH-3. Once a frequency is memorized, the AH-3 tunes on that frequency in less than 1 sec. Note that the AH-3 does not memorize a frequency which is normally tuned within 2.5 sec. Memories are retained only when the power is ON.

•WEATHERPROOF DESIGN

The AH-3's tightly sealed plastic case allows convenient mounting virtually anywhere. The AH-3 can be mounted outdoors under your antenna.

•0.3 W RADIATED POWER

Radiated power during tuning is less than 0.3 W, minimizing interference to other stations.

UNPACKING

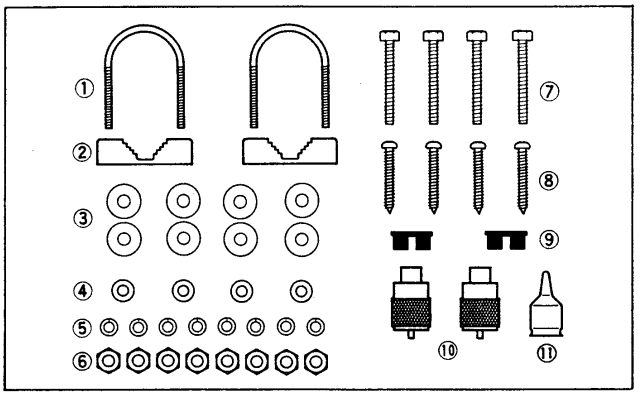

①	U-bolts	2
②	U-bolt plates	2
③	Flat washers (M6 large)	8
④	Flat washers (M6 small)	4
⑤	Spring washers (M6)	8
⑥	Nuts (M6)	8
⑦	Hex head bolts (M6 x 50)	4
⑧	Self-tapping screws (A0 6 x 30)	4
⑨	Strain relief inserts	2
⑩	PL-259 connectors	2
⑪	Weatherproof cap	1
⑫	Control cable (5 m, connector assemblies)	1
⑬	Coaxial cable (5 m)	1

INSTALLATION

NOTE: After inserting the coaxial cable into the AH-3 top cover, solder the PL-259 connector to the coaxial cable.

(1) Remove the top cover (Fig. 1).

(2) Install the control cable and coaxial cable. (Fig. 1)

(3) Connect and solder the PL-259 connector to the coaxial cable. (Fig. 3)

(4) Connect the control cable to the AH-3. (Fig. 2)

(5) Replace the top cover.

(6) Mount the AH-3 in the desired location: on an antenna pole, in your vehicle's trunk, etc. (Fig. 4)

(7) Connect an antenna to the AH-3. (Fig. 5)

(8) Connect the control cable and the coaxial cable to the transceiver.

Fig. 1 COVER REMOVAL AND CABLE INSTALLATION

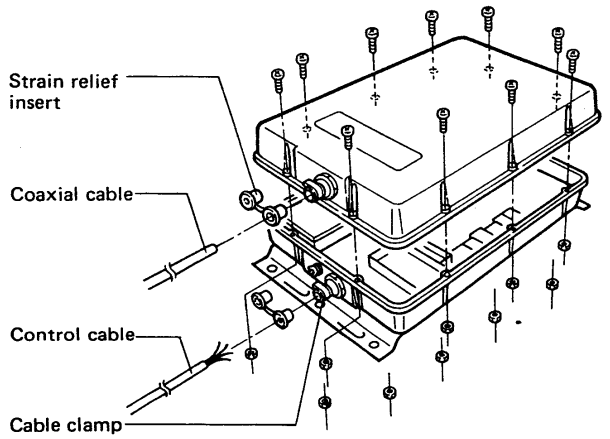

1) Remove 10 screws from the top cover and remove the cover.

2) Loosen the screws on both cable clamps. If desired, install a strain relief insert (supplied) corresponding to the diameter of the cable.

3) Install the coaxial cable through the top cover cable clamp.

4) Install the control cable through the bottom cover cable clamp.

5) After connecting the coaxial and control cables, tighten the cable clamp screws.

Fig. 2 CABLE CONNECTIONS

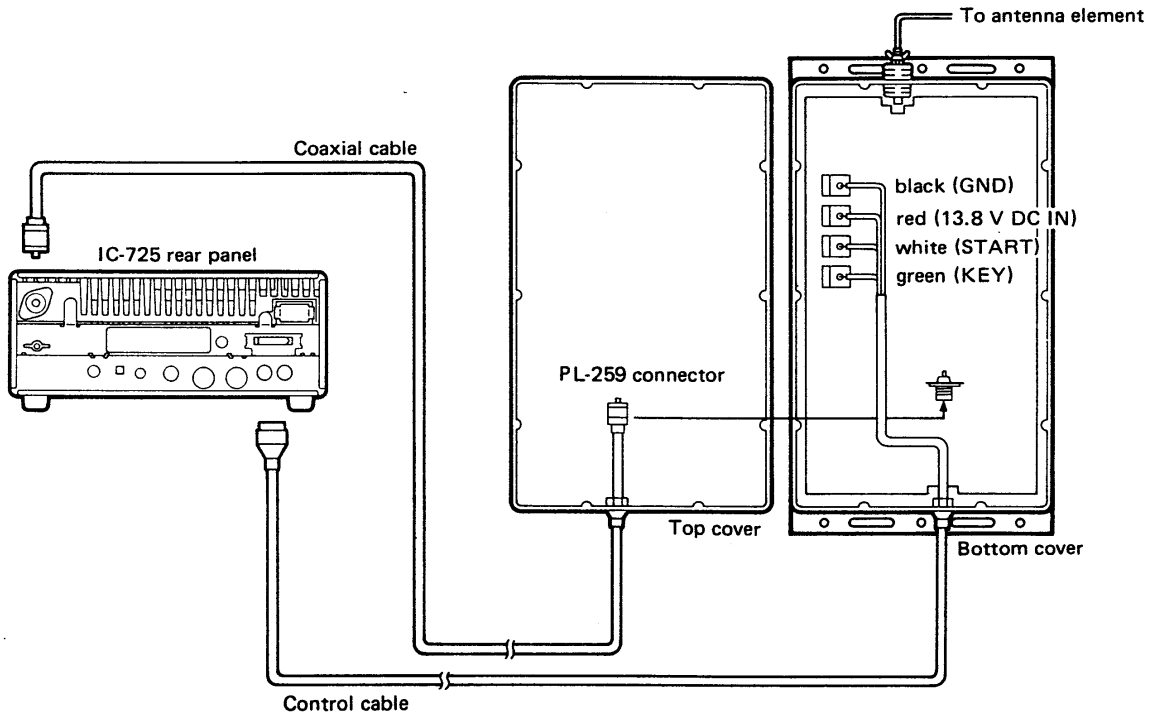

Fig. 3 PL-259 CONNECTOR SOLDERING

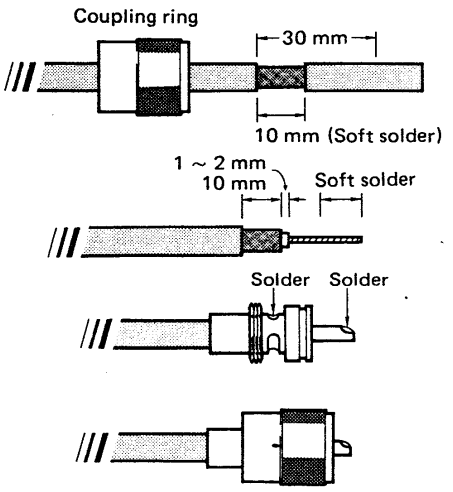

(1 in = 25.4 mm)

1) Slide the coupling ring over the coaxial cable. Strip the cable jacket and pull it to reveal 10 mm (0.4 in) of braid.
   - Soft solder the exposed braid and then pull out the jacket.

2) Strip the cable as shown at left. Tin the center conductor the entire length of the exposed braid.

3) Slide the connector body over the cable and solder as shown at left.

4) Screw the coupling ring onto the connector body.

Fig. 4 MOUNTING THE AH-3

•MOUNTING ON AN ANTENNA POLE

Use the supplied U-bolts

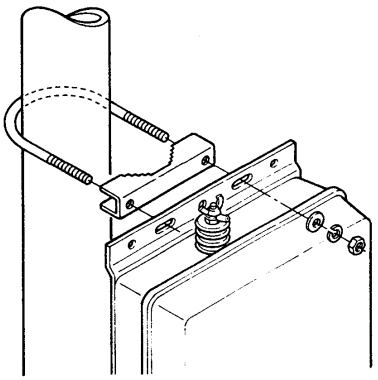

•MOUNTING ON A FLAT LOCATION

Using nuts and bolts

Using self-tapping screws

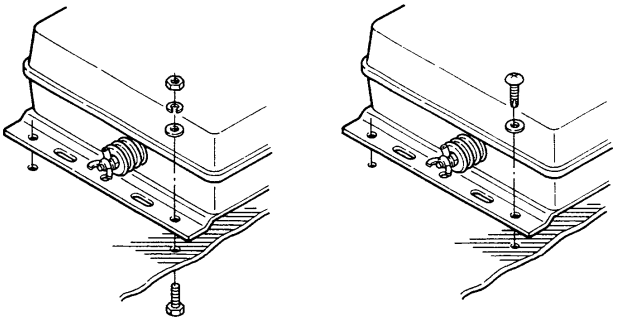

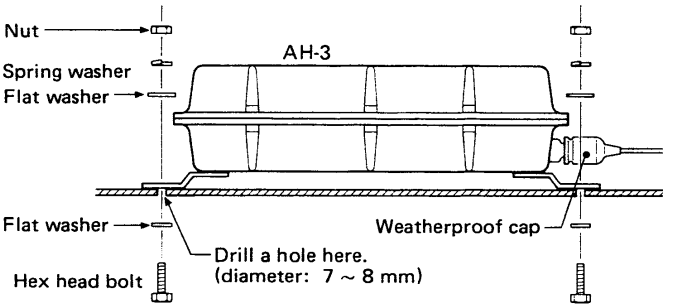

Fig. 5 MOUNTING EXAMPLES

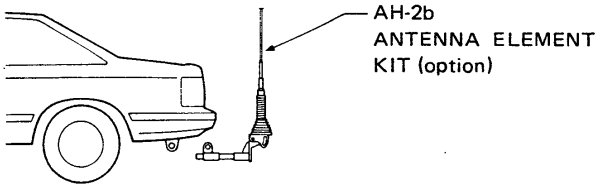

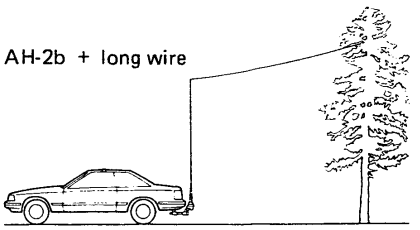

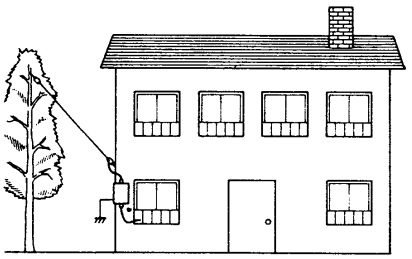

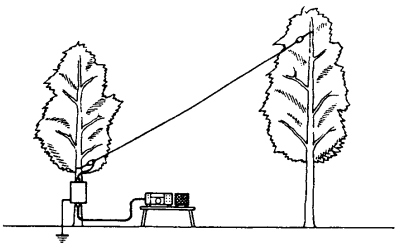

OPERATION

To ensure the correct impedance match, tune the antenna with the AH-3 each time the operating frequency is changed.

"TUNE" blinks while tuning.

"TUNE" steadily appears when tuning is completed.

"THRU" appears when tuning is unsuccessful.

(1) Set the desired amateur band and frequency of the transceiver.

(2) Push the [TUNER] switch on the transceiver.
- The transceiver automatically changes the mode to CW and transmits at low power.
- "TUNE" blinks while tuning.
- Do not change the frequency or mode while tuning.

(3) After tuning is completed "TUNE" steadily appears on the function display.
- Normally, tuning requires less than 20 secs; average tuning time is 2 ~ 3 secs.

(4) When tuning is unsuccessful, "THRU" appears on the function display.
- At this time, check the antenna connection and antenna length.
- The AH-3 cannot tune when the antenna is a half-wave or a multiple of a half-wave in length to the operating frequency.

(5) To bypass (turn OFF) the antenna tuner, push the [FUNCTION] switch and then push the [TUNER] switch.
- "THRU" appears on the function display.

■ CALCULATION OF ANTENNA LENGTH AVOIDED

Length of half-wave $(1/2\,\lambda) = \dfrac{300}{\text{Operating frequency (MHz)}} \times \dfrac{1}{2}$

[EXAMPLE] Avoid antenna length with an operating frequency of 29.00 MHz

Multiple of $1/2\,\lambda = \dfrac{300}{29} \times \dfrac{1}{2} \times (1, 2, 3, \ldots) = 5.2, 10.3, 15.5$ m

SPECIFICATIONS

• Frequency range	:	3.5 ~ 30 MHz (with the AH-2b) 1.8 ~ 30 MHz (with an antenna longer than 12 m/40 ft)
• Maximum input power	:	120 W
• Input impedance	:	50 Ω
• Tuning power required	:	5 ~ 15 W
• Rated voltage	:	13.8 V DC ± 15%
• Usable temperature range	:	−10°C ~ +60°C (+14°F ~ +140°F)
• VSWR	:	Less than 1.5 : 1 (except antennas a half-wave or a multiple of a half-wave in length)
• Weight	:	2.4 kg (5.3 lb)
• Dimensions	:	230(W) x 85(H) x 38(D) mm 9.1(W) x 3.3(H) x 1.5(D) in (Projections not included.)

All stated specifications are subject to change without notice or obligation.

Icom Inc.
6-9-16, Kamihigashi, Hirano-ku, Osaka 547, Japan

Count on us!

A-8025-1EX Printed in Japan

Copyright © 1988 by Icom Inc.

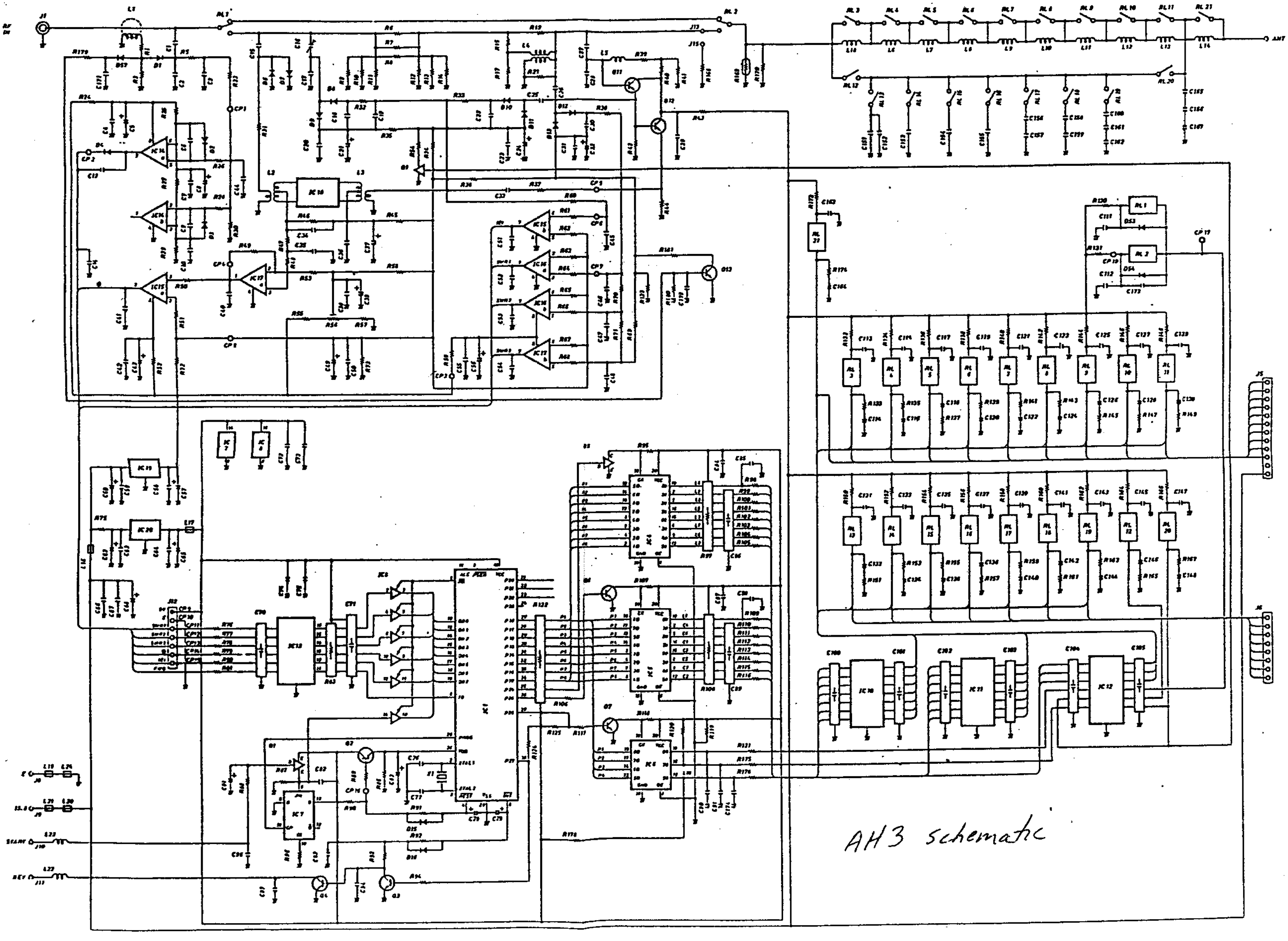

AH3 schematic