VHF FM TRANSCEIVER

IC-H16

SERVICE MANUAL

ICOM INCORPORATED
1-6-19, Kamikuratsukuri, Hirano-ku, Osaka 547, Japan
Phone: (06) 793-5301
Telex: ICOM TR J63649

ICOM AMERICA, INC.
2380 116th Avenue N.E.
Bellevue, Washington 98004
Phone: (206) 454-8155
Telex: 230-152210 ICOM AMER BVUE
Fax: (206) 454-1509

3331 Towerwood Drive
Suite 307
Dallas, Texas 75234
Phone: (214) 620-2781
Telex: 230-730901 ICOM AMER DAL

1777 Phoenix Parkway
Suite 201
Atlanta, Georgia 30349
Phone: (404) 991-6166

ICOM (EUROPE) GmbH
Himmelgeister strasse 100
4000 Düsseldorf 1
West Germany
Phone: 0211-346047
Telex: 41-8588082 ICOM D
Fax: 211-333639

ICOM CANADA LTD.
3071-#5 Road, Unit 9
Richmond, B.C.
V6X 2T4 Canada
Phone: (604) 273-7400
Fax: (604) 273-1900

ICOM AUSTRALIA, PTY., LTD.
7 Duke street, Windsor 3181
Victoria, Australia
Phone: (03) 529-7582
Telex: 71-35521 ICOMAS

FOREWORD

Thank you for choosing the ICOM **IC-H16**, one of the most advanced VHF portables on the Land Mobile market today.

Utilizing sophisticated computer based technology and ICOM's precision VHF engineering, the **IC-H16** incorporates state-of-the-art design concepts to meet the demanding needs and requirements of the Land Mobile user.

ASSISTANCE

There are three different versions of the **IC-H16**. This service manual is designed to cover every version. Each model is assigned a particular number as follows.

Version No.	Version	Frequency range	Channel spacing
#01	U.S.A.	148.00 ~ 174.00MHz	25kHz
#02	U.S.A.	136.00 ~ 144.00MHz	25kHz
#03	U.K.	148.00 ~ 174.00MHz	12.5kHz

Please contact your neasrest ICOM Service center if you require assistance or information regarding the operation and capabilities of the **IC-H16**. Addresses are provided on the title page of this manual.

TABLE OF CONTENTS

SECTION 1 SPECIFICATIONS ..... 1 – 1

SECTION 2 OPERATING CONTROLS ..... 2 – 1

SECTION 3 INSIDE VIEWS ..... 3 – 1

SECTION 4 BLOCK DIAGRAM ..... 4 – 1

SECTION 5 CIRCUIT DESCRIPTION ..... 5 – 1 ~ 7
- 5 - 1 RECEIVER CIRCUITS ..... 5 – 1
- 5 - 2 TRANSMITTER CIRCUITS ..... 5 – 1
- 5 - 3 PLL CIRCUITS ..... 5 – 2
- 5 - 4 POWER SUPPLY CIRCUITS ..... 5 – 3
- 5 - 5 LOGIC CIRCUITS ..... 5 – 3

SECTION 6 MECHANICAL PARTS AND DISASSEMBLY ..... 6 – 1 ~ 5
- 6 - 1 DISASSEMBLY OF THE CASE ..... 6 – 1
- 6 - 2 DISASSEMBLY OF THE TOP PANEL ..... 6 – 3
- 6 - 3 PA AND EXTERNAL JACK ASSEMBLY ..... 6 – 3
- 6 - 4 SPEAKER AND MICROPHONE ASSEMBLY ..... 6 – 4
- 6 - 5 DISPLAY UNIT AND LCD ASSEMBLY ..... 6 – 4
- 6 - 6 PTT SPRING ASSEMBLY ..... 6 – 5
- 6 - 7 UNIT BOTTOM ASSEMBLY ..... 6 – 5

SECTION 7 MAINTENANCE AND ADJUSTMENT ..... 7 – 1 ~ 5
- 7 - 1 PREPARATION BEFORE SERVICING ..... 7 – 1
- 7 - 2 POWER SUPPLY CHECKS ..... 7 – 2
- 7 - 3 PLL ADJUSTMENT ..... 7 – 3
- 7 - 4 TRANSMITTER ADJUSTMENT ..... 7 – 4
- 7 - 5 RECEIVER ADJUSTMENT ..... 7 – 5

SECTION 8 VOLTAGE DIAGRAMS ..... 8 – 1 ~ 4
- 8 - 1 MAIN UNIT ..... 8 – 1
- 8 - 2 PLL UNIT ..... 8 – 2
- 8 - 3 LOGIC UNIT ..... 8 – 3
- 8 - 4 DISPLAY UNIT ..... 8 – 4

SECTION 9 BOARD LAYOUTS ..... 9 – 1 ~ 4
- 9 - 1 MAIN UNIT ..... 9 – 1
- 9 - 2 PLL UNIT ..... 9 – 2
- 9 - 3 LOGIC UNIT ..... 9 – 3
- 9 - 4 DISPLAY UNIT ..... 9 – 4

SECTION 10 PARTS LIST ..... 10 – 1 ~ 6

SECTION 11 IC SPECIFICATIONS ..... 11 – 1 ~ 9

SECTION 12 BATTERY PACK SCHEMATIC DIAGRAMS ..... 12 – 1 ~ 2
- 12 - 1 IC-CM7 ..... 12 – 1
- 12 - 2 IC-CM8 ..... 12 – 2

SECTION 13 SCHEMATIC DIAGRAM ..... SEPARATE

SECTION 14 PROGRAMING MANUAL ..... SEPARATE

SECTION 1 SPECIFICATIONS

GENERAL

Frequency range	:	148.00MHz~174.00MHz (#01, #03) 136.00MHz~144.00MHz (#02)
Number of channels	:	16 channels (keyboard programmable) Simplex, semi-duplex operation
Usable temperature	:	−30°C~+60°C (−22°F~+140°F)
Channel spacing	:	25kHz (#01, #02) 12.5kHz (#03)
Frequency stability	:	±0.0005%
Antenna impedance	:	50 ohms unbalanced
Power supply requirement	:	8.4V DC with IC-CM8 attendant battery pack (negative ground)
Current drain	:	Transmit : 1150mA approx. Receive : 200mA approx. Standby : 65mA approx. (35mA with power saver)
Dimensions	:	65(74)mm(W) × 196(207)mm(H) × 38(41)mm(D) Bracketed values include projections.
Weight	:	595g including IC-CM8 battery pack.

RECEIVER

Receiving system	:	Double-conversion superheterodyne
Modulation acceptance	:	16K0F3E
Intermediate frequency	:	1st: 21.8MHz 2nd: 455kHz
Sensitivity	:	Less than 0.4μV for 12dB SINAD
Audio output power	:	500mW minimum at 10% distortion with 8 ohms load.
Audio output impedance	:	8 ohms

TRANSMITTER

Output power	:	HIGH 2.5W LOW 0.5W (with IC-CM8) HIGH 5.0W LOW 0.5W (with IC-CM7)
Emission mode	:	16K0F3E
Modulation system	:	Variable reactance frequency modulation
Microphone	:	Built-in electret condenser microphone

SECTION 2 OPERATING CONTROLS

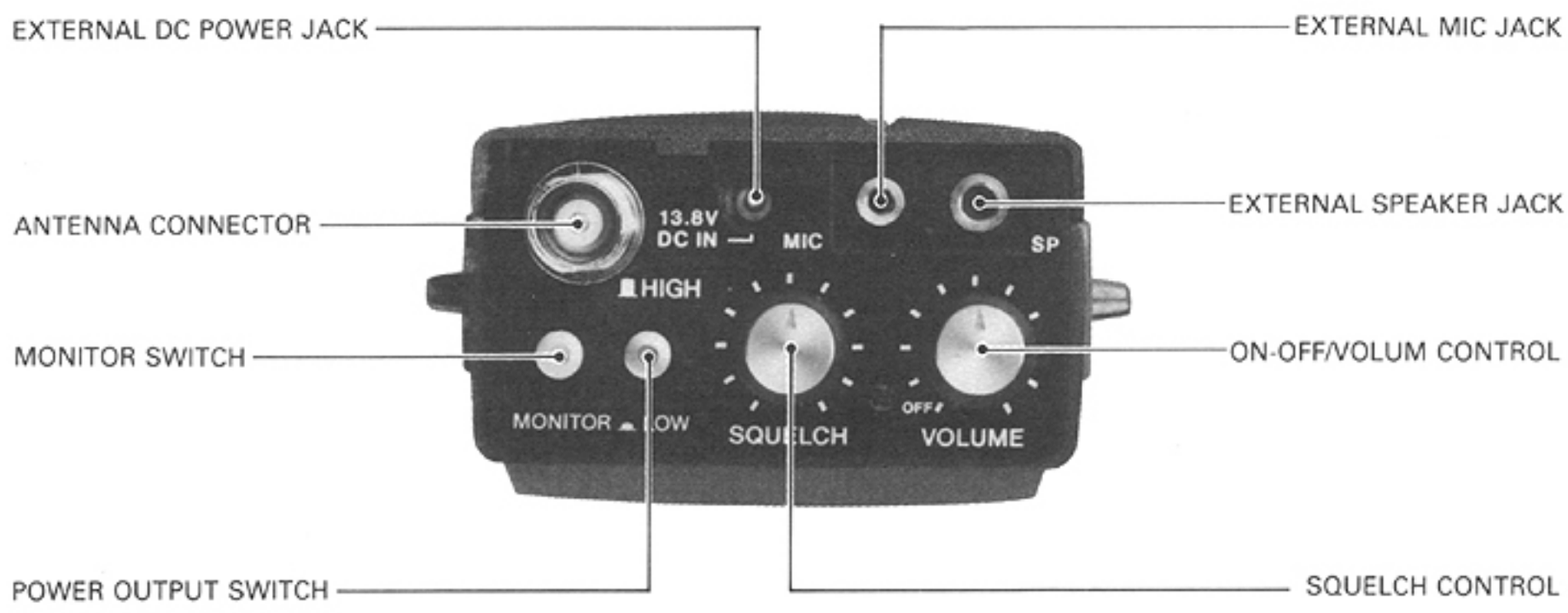

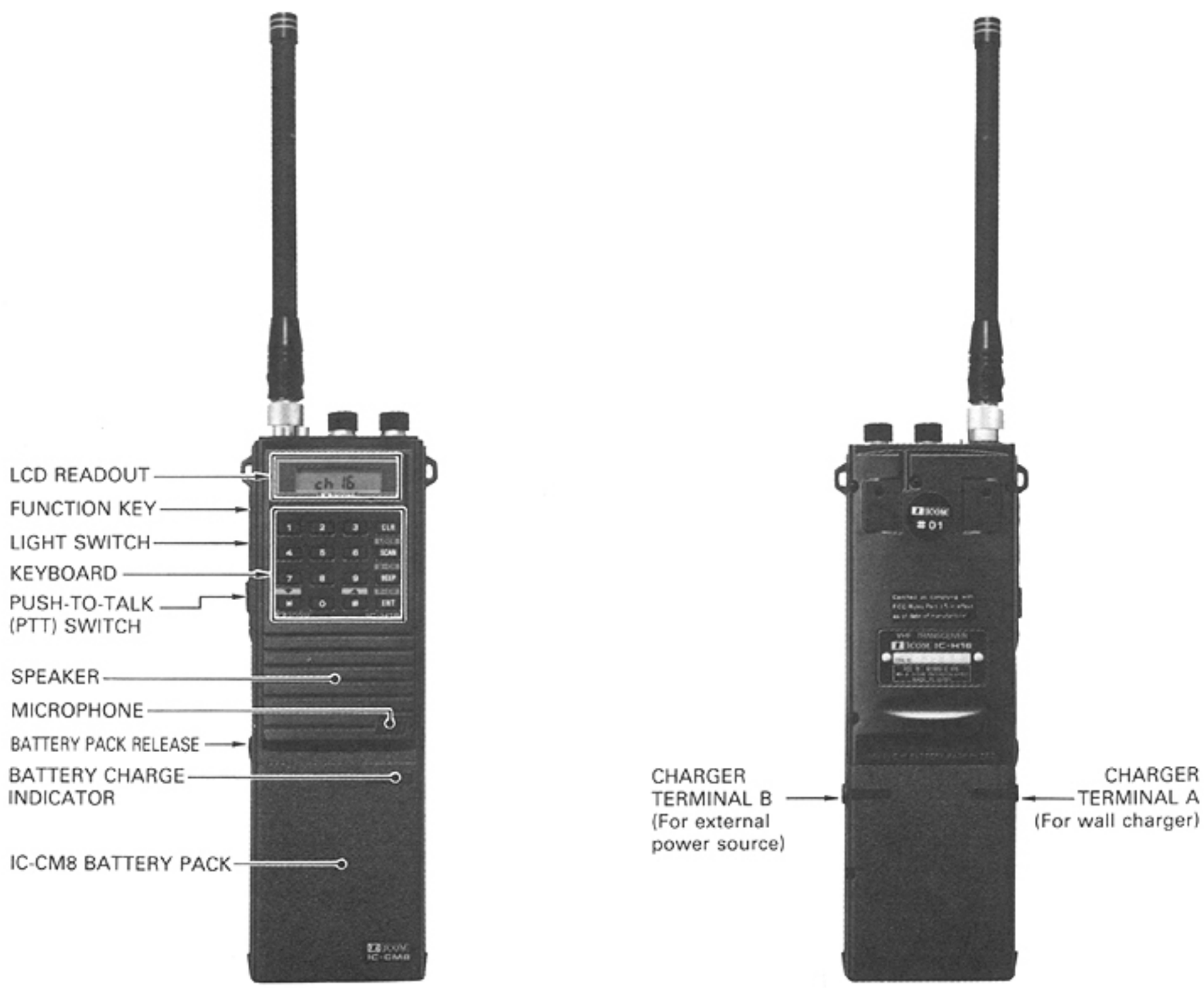

SECTION 3 INSIDE VIEWS

MAIN/PLL UNIT

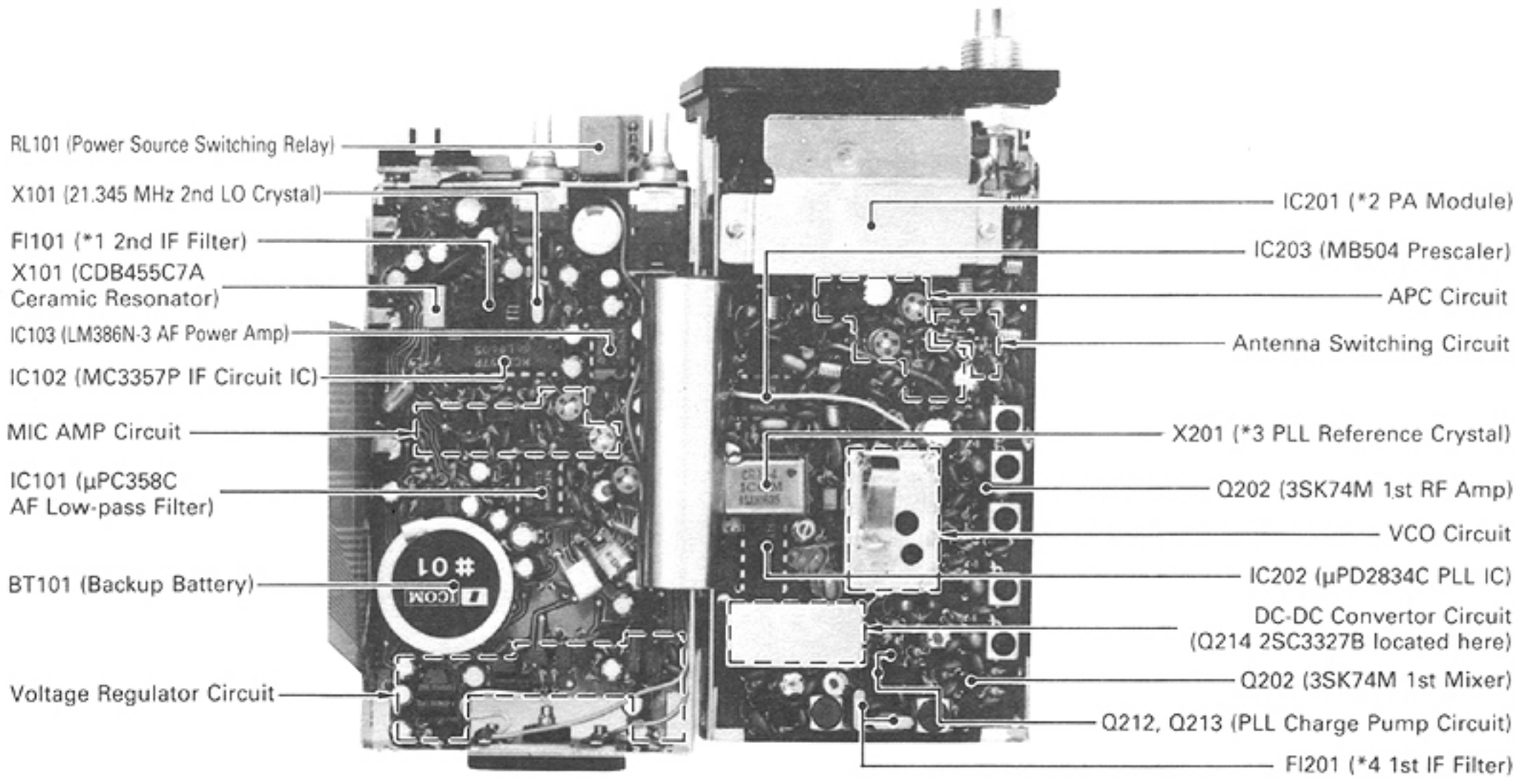

MAIN UNIT **PLL UNIT**

*1	FI101	CFW455E	(#01, #02)	CFW455HT	(#03)
*2	IC201	SC-1046	(#01, #03)	SC-1050	(#02)
*3	X201	5.12 MHz	(#01, #02)	6.4 MHz	(#03)
*4	FI201	21M15B3	(#01, #02)	21M7B2	(#03)

LOGIC/DISPLAY UNIT

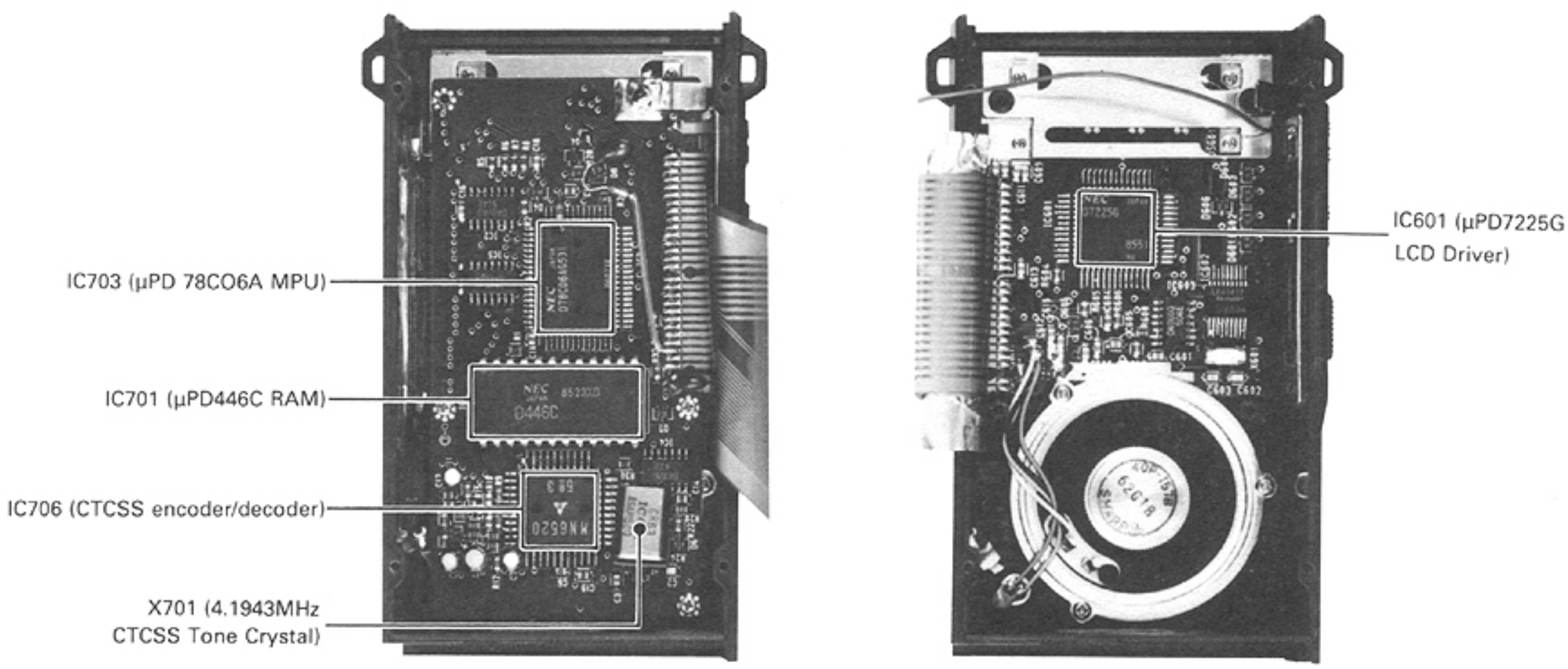

LOGIC UNIT **DISPLAY UNIT**

SECTION 4 BLOCK DIAGRAM

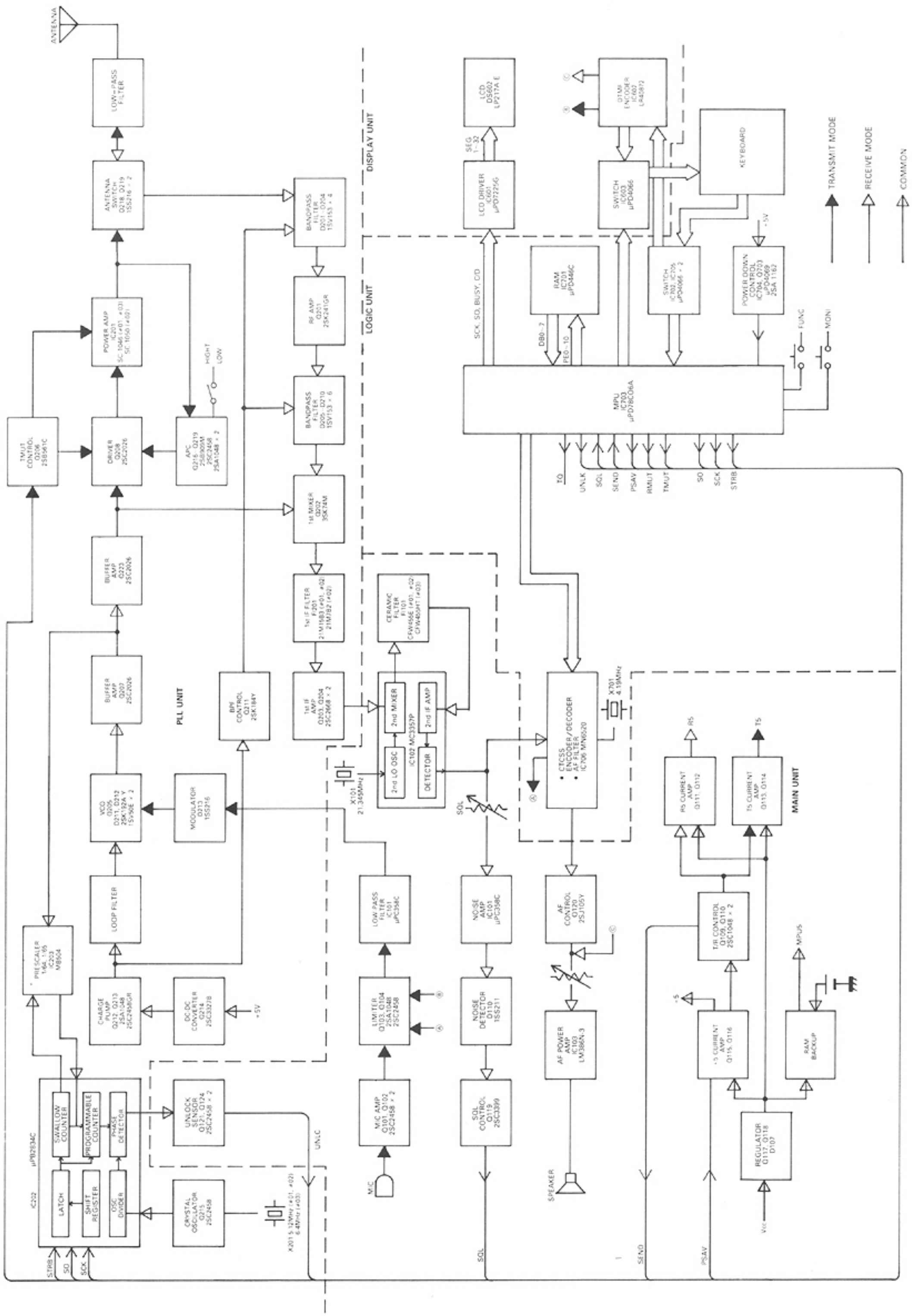

SECTION 5 CIRCUIT DESCRIPTION

5 - 1 RECEIVER CIRCUITS

5 - 1 - 1 ANTENNA SWITCHING CIRCUIT

Input signals from the antenna connector are fed into the antenna switching circuit through low-pass filter consisting of C270, L219, C269, L218, C268, C267 and C266 on the PLL unit. The antenna switching circuit employs a quarter wave circuit consisting of D218, D219, C264, C265 and L217.

5 - 1 - 2 RF AMPLIFIER CIRCUIT

Signals from the switching circuit pass through bandpass filters consisting of L201, C202, D201, D202, D203, D204, C305 and L202 on the PLL unit. Signals passed through the bandpass filters are applied to the first RF amplifier, Q201 and are amplified.

Output signals from Q201 are again passed through bandpass filters which consist of L203, C209, D205, D206, L204, C212, D207, D208, D209, D210, L205 and C216 and are then reduced interference from out-of-band signals.

Diodes D201 to D210 are varactor diodes that track the bandpass filters and are controlled by the PLL lock voltage. These diodes tune the center frequency of the bandpass filters for wide bandwidth reception and a good image response rejection ratio.

Signals from the bandpass filters are fed into gate 1 of Q202. Local oscillator signals from the PLL unit also are fed into gate 2 of Q202 through C217. Q202 is a first mixer which converts RF signals into 21.8MHz the first intermediate frequency and outputs it at L206.

5 - 1 - 3 INTERMEDIATE FREQUENCY CIRCUIT

The first intermediate signal from L206 is filtered further from out-of-band interference through a matched pair of monolithic crystal filters that are FI201 and is then amplified at Q203 and Q204.

IC102 on the MAIN unit incorporates in one package a second local oscillation circuit, a second mixer, a limiter amplifier, an active filter, and a quadrature detector circuit.

The first intermediate frequency signal enters IC102 (pin 16) and mixes with a second local oscillator frequency (21.345MHz) generated by X101. The 455kHz second intermediate frequency signal is then output from pin 3. This signal passes through a high-performance ceramic filter (FI101), and is amplified at a limiter amplifier.

Output signals from the limiter amplifier are separated. One of the signal enters a quadrature detector circuit, and the other exits from pin 7. The signal output from pin 7 enters pin 8 through ceramic resonator X102, and then both signals are detected at a quadrature detector circuit inside IC102. The resulting audio signal is output from pin 9 and is then applied to IC706 (pin 29) on the LOGIC unit.

5 - 1 - 4 AUDIO FREQUENCY CIRCUIT

IC706 incorporates a CTCSS encoder/decoder, an AF amplifier, and a dual AF filter circuit.

The signal applied to IC706 is amplified and then exits from pin 18. This signal is amplified at Q702 through a low-pass filter consisting of R715 and C711. This low-pass filter is a de-emphasis circuit which has −6dB/oct characteristics.

Output signals from Q702 re-enter the MAIN unit and are fed into AF SWITCH (Q120). This FET cuts the AF signal when RX MUTE is operating or the squelch is closed.

The signals that enter Q120 are then fed into an AF power amplifier circuit (IC103 pin 3) through AF volume control R161. The gain of IC103 is fixed by R162 and C155 which are connected across pins 1 and 8. The speaker is driven at more than 500mW of AF output by IC103 with an 8 ohm load and 8.4V Vcc.

The power source for IC103 consists of Q123 and D113 which protect it from excess voltage, maintaining the voltage at less than 12V.

5 - 1 - 5 SQUELCH CIRCUIT

A portion of signals output from IC102 (pin 9) pass through R148, Squelch volume and is then input to active filter IC101B (pin 2) where noise signals are selected at approximately 20kHz then output from pin 1.

The noise signals are detected by D110 and are then converted to DC voltage and used as squelch control signals. This voltage is input to IC703 (pin 15) on the LOGIC unit through invertor circuit Q119, and is then output from pin 30 as R.Mute voltage.

R.Mute voltage is applied to the gate of Q120 and switches AF output. Q120 also eliminates the noise from channel changing during operation. Q126 receives a strobe pulse from IC703 and applies a mute signal to Q120.

5 - 1 - 6 FIRST LOCAL OSCILLATOR CIRCUIT

The signal (114.2 ~ 152.2 MHz) generated at the VCO is amplified at Q207 on the PLL unit and is then input to gate 2 of Q202 on the RF unit through D214.

5 - 2 TRANSMITTER CIRCUITS

5 - 2 - 1 MIC AMPLIFIER CIRCUIT

The audio signal from MIC 1 or MIC 2 is amplified by a limiter amplifier circuit consisting of Q101 to Q104. This limiter amplifier circuit employs of a negative feedback circuit that has pre-emphasis characteristics between 300Hz and 3kHz with 6dB/oct.

The first mic amplifier circuit consists of a differential amplifier circuit that makes a limiter output signal in a symmetical wave form.

The output signal from the limiter amplifier is like a square wave and includes many RF signals which are fed back from the transmitter's final stage. The output signal, therefore, is fed to splatter filter circuit IC101A which reduces signals with more than 3kHz, and then applies it to the VCO for modulation.

5 - 2 - 2 BUFFER AMPLIFIER CIRCUIT

The 100MHz band is generated by the VCO and is buffered and amplified at Q207 and Q223. Output from Q223 is amplified at drive stage Q208 through D215, thus obtaining a wideband of 20mW.

5 - 2 - 3 POWER AMPLIFIER CIRCUIT

IC201 is a small-sized power module giving a stable output power of more than 5W (136 ~ 144MHz or 148 ~ 174MHz) with a driving power of 20mW from Q208.

The driving signals from Q208 are fed into IC201 (pin 1), amplified up to approximately 5W at 13.2V, and are output from pin 5.

While transmitting, Q220, D218 and D219 are activated, then L217 and C265 become parallel resonance circuits. The output power from IC201 is applied to the antenna terminal through a low-pass filter consisting of C226 to C270, L218 and L219 that filters and reduces harmonic spurious radiation.

Q206 controls the bias voltage of Q208 and IC201 to prevent unwanted emissions when switching from receive mode to transmit mode, or when the PLL is being unlocked to prevent a possible failure.

5 - 2 - 4 APC CIRCUIT

The antenna mismatching detection circuit consists of L215, C256 to C261, D216 and D217. Output voltage of the detector is a minimum value when the antenna impedance is matched at 50 ohms. However, when the antenna impedance is in a mismatched condition, the detector voltage becomes higher than it would be if the antenna were matched.

Q218 and Q219 make up the differential amplifier circuit. At the base of Q219, the bias voltage determined by R272, R276 and R274 is applied.

The voltage detected at D216 and D217 is combined by R237 and R238, and is fed into the base of Q219. If a mismatched condition occurs, the voltage at the base of Q218 will be higher than at the base of Q219. This condition will reduce the Q217 collector current and the Q216 base current, decreasing the current of Q208.

The output power of Q208 is also decreased, reducing the output power of IC201 until the base voltage of Q218 becomes equal to the base voltage of Q219.

In a matched condition, HIGH output power is determined by the value of R272. When the power switch is in the LOW position, the combination of R273 and R275 is connected in parallel with R274. R275 may then be used to set the low power.

5 - 3 PLL CIRCUITS

The PLL is designed in a way that allows the desired frequency to be generated directly by the VCO, adopting a dual modulous pre-scaler system. The PLL consists of a pre-scaler (IC203) and PLL IC (IC202). It is fed "divided by N-data" from the MPU which determines the operating frequency.

N-data is determined by dividing the desired frequency by the reference frequency. Desired frequency is the transmit frequency in the transmit mode and the first local oscillator frequency in the receive mode.

$$N = \frac{\text{Desired frequency}}{\text{Reference frequency}}$$

A reference frequency of 5kHz (12.5kHz #03) is obtained by oscillator Q215, X201 and the internal IC202 divider.

Signals from the VCO that are buffer amplified at Q207 are divided N times at IC203 and fed into pin 4 of IC202. Signals inside IC202 are phase detected and are lock voltages that are output from pins 12 and 13. Output voltages are applied to varactor diode D211 and D212 in the VCO circuit through a loop filter that controls the VCO frequency. Due to a no-multiplying mixing circuitry, the circuit constitution is simple and reduces spuriousness.

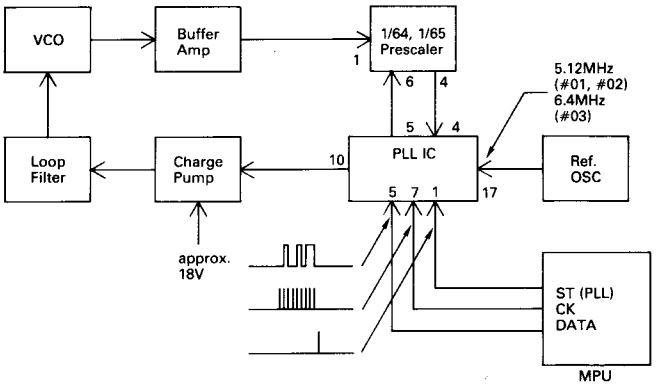

Fig. 5-1 PLL Circuit Block Diaglam

5 - 3 - 1 UNLOCK CIRCUIT

When the PLL is unlocked, pin 10 of IC202 is at a LOW voltage level. This voltage is fed into unlock detection circuits Q121 and Q124 on the MAIN unit and is then sent to the MPU on the LOGIC unit.

5 - 3 - 2 LOOP FILTER CIRCUIT

Output from pins 12 and 13 on the IC203 is fed into charge pumps, Q212 and Q213 and is then applied to a lag lead-type loop filter that consists of R248, R246, and C278. These circuits determine the characteristics of the PLL.

Output voltages from loop filter control varactor diode D211 and D212 in the VCO circuit through integral circuits R245 and C276.

5 - 3 - 3 VCO UNIT

The VCO, Q205 employs a Hartley oscillator circuit. The VCO free-run frequency is shifted by induction reactance of L221 which is changed by Q222 and D213, and is then controlled by a varactor diode. Thus a stable oscillation is achieved over a wide frequency range.

While receiving, the RS5 line is 5V, Q222 and D213 are activated, and then C236 is conneected in a parallel with D211 and D212 through C233. While transmitting, the RS5 line is 0V and then Q222 and D213 turn OFF. So C236 has no effect on the oscillastion frequency. Therefore the VCO free-run frequency while transmitting is higher than while receiving.

While transmitting, modulation signals are applied to the cathode of D211 and D212, and then its capacitance is changed, performing frequency modulation. This deviation is adjusted by R186.

5 - 4 POWER SUPPLY CIRCUITS

5 - 4 - 1 INTERNAL/EXTERNAL POWER

When using a battery pack, RL101 is OFF. When a power source having 10 ~ 16V is connected to the external power terminal (EXT), RL101 will be activated. The transceiver will then be operated by an external power source.

If an incorrect connection to the external power terminal (such as reversing polarities) is made, D109 will be affected, reversing its bias and preventing RL101 from being activated.

5 - 4 - 2 +5V REGULATOR CIRCUIT

The +5V voltage regulator circuit consists of Q117, Q118 and D107 where output voltage is kept at 5V constantly, even with input voltage from 5.1 ~ 16V. These transistors are connected in a complementary circuit in order to acquire a higher current amplification factor. As the temperature coefficient of the junction voltage of D108 is nearly equal to the voltage of Q117 V_{BE}, the output voltage is kept constant against temperature changes.

5 - 4 - 3 5V REGULATOR, POWER SAVE CIRCUIT

This voltage regulator circuit uses reference voltage from pin 29 of IC703 on the LOGIC unit. This circuit consists of Q115 and Q116 which are also connected in a complementary circuit in order to stabilize operations.

When the power save function is activated, power save signals from pin 29 of IC703 on the LOGIC unit are applied to Q115 at intervals, thus Q115 turns ON and OFF alternately. The result is that the power save signal controls +5V and constructs the POWER SAVER.

5 - 4 - 4 T/R SWITCHING CIRCUIT

While transmitting, Q106 is activated and transfers transmit signals to the MPU. At the same time, Q107, Q108, and Q109 are also activated, and Q110 turns OFF. Q113 and Q114 are T5 voltage regulator circuit that is switched by Q109. When Q109 is activated, the T5 line operates at 5V and the R5 line at 0V. While receiving, Q106 is OFF. Q109 is then OFF and Q110 is ON, resulting in the T5 line being 0V and the R5 line 5V.

When the squelch is changed from the closed to open condition some noise will be emitted from the speaker. This phenomenon is called the squelch burst. To remove this noise from the speaker, the squelch can be controlled by a CTCSS tone.

The transmitter contains a delay circuit for the transmit carrier. The delay period for the transmit carrier is longer than that of the PTT.

In this transceiver the delay circuit consists of time constants C131 and R137 which remove the squelch burst.

5 - 4 - 5 VOX POWER SOURCE CIRCUIT

This is a current limiter that supplies a voltage to the external VOX unit, HS-10SA. Current drain of up to 5mA is acceptable. In the case of a normal load current the voltage drop through R279 is small, approximately 5V, and is fed into the VOX unit. The increase in load current leads to the increase of the voltage drop at R279. When the voltage, obtained by adding the voltage between the emitter and base of Q221 to it, is equal to the voltage between R280 and the D225 cathode, the load current is limited.

This VOX power source circuit is also a data transmit circuit when the cloning operation is activated. The base of Q217 connects through R281 to pin 28 (CPO) on IC703. CPO is the output port for cloning data and controls Q217, thus data is transferred to existence.

Cloning data exits from the mic terminal and passes through R102, R104, and control Q106 on the MAIN unit. It then enters pin 14 (SEND) of IC703 for data reception. SEND also combines a data input port.

5 - 5 LOGIC CIRCUITS

The LOGIC circuits consist of an 8 bit C-MOS MPU, a 2K C-MOS RAM, a CTCSS tone encoder/decoder, and an LCD driver. They control frequency, tone, display, etc.

5 - 5 - 1 MPU

This MPU, µPD78C06AG, includes a 4K byte ROM and a 128 byte RAM. Following is an explanation of operations related to each port.

(1) DB 0 ~ DB 7

These are bi-directional ports, and are an 8 bit data bus. The bus transfers or receives the data to and from a 2K RAM IC chip. DB 0 to DB 3 are also used for matrix reception.

(2) PE 0 ~ PE 15

These are 16 bit ports which have address ports and output ports that are switched by the program. PE 15 is used to select signals. PE 0 to PE 10 generate address signals. PE 0 to PE 3 and PE 14 are output ports for the matrix. PE 0 is used as a switching signal for command and LCD driver data. (The matrix construction is described in Fig. 5-2.)

(3) PORTS A

These are output ports with an 8 bit latch.

- **PA 7 ($\overline{CS}$)**

This is an enable signal for the LCD driver. When this port is LOW, the MPU transfers COMMAND or DATA to the LCD. (Timing charts is described in Fig. 5-3.)

- **PA 4 (TMUT)**

This is an output port and will be at the HIGH level position for approximately 60 milliseconds when changing from receive to transmit. If the PLL is unlocked then this port will remain at a HIGH level.

- **PA 3 (RMUT)**

This port will be at the HIGH level position when receiving in the mute condition.

- **PA 2 (PSAU)**

This port outputs control signals for saving power. When this port is in the LOW level position, the transceiver is in the save condition.

- **PA 1 (CPO)**

This port outputs cloning data.
(The cloning data construction is described in Fig. 5-4.)

- **PA 0 (STRB)**

This port outputs latch signals for PLL data.

(4) PORTS B

These ports are 8 bit bi-directional ports that change in 1 bit steps.

- **PB 7 ($\overline{MONI}$)**

This is an input port for the monitor switch.

- **PB 6 ($\overline{T}$/R)**

This is an output port for switching the signals of the TONE IC. While in the transmit mode, this port is at the LOW level position; in the receive mode it is in the HIGH level position. However, if the TONE number is 0, voltage signals are opposite.

- **PB 0 ~ 5 (S0 ~ S5)**

These are output ports for TONE data which describe TONE numbers, frequency, and data.

(5) PORTS C

These are input ports with 6 bits of data.

- **PC 5 ($\overline{BUSY}$)**

This is an input port for BUSY signals from the LCD driver.

- **PC 4 (TRF)**

This is a T5V input port. When this port is at the HIGH level position the TX indicator is illuminated.

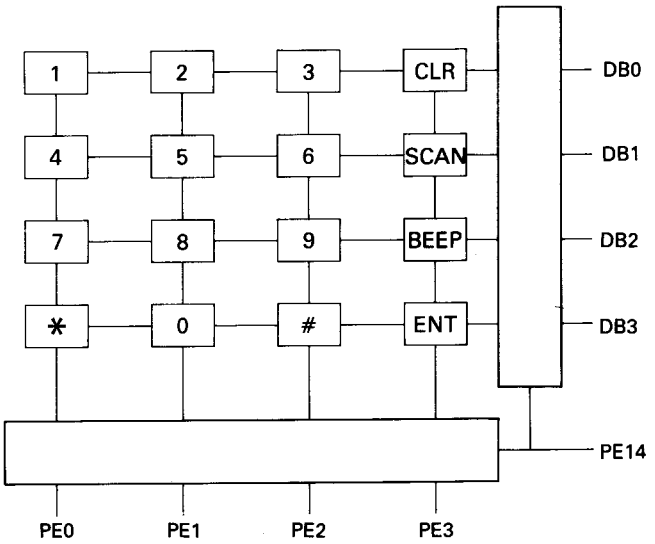

Fig. 5-2 Matrix Construction

AT COMMAND TRANSMITTING (CODE 0E, 0H)

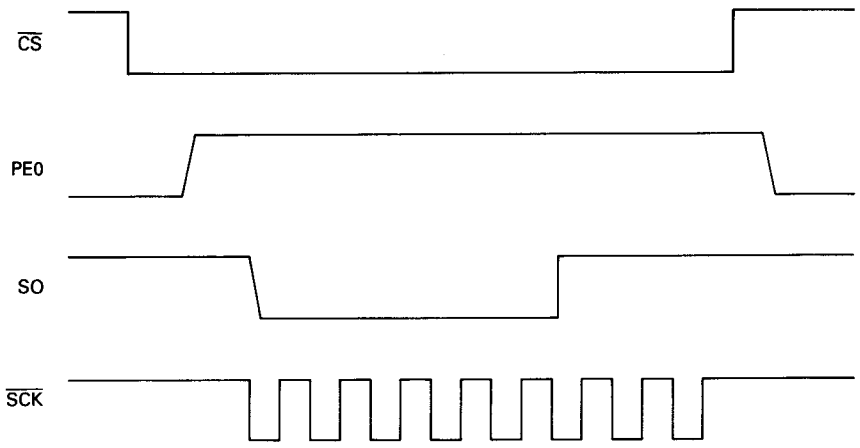

AT DATA TRANSMITTING (DATA 0A, 5H)

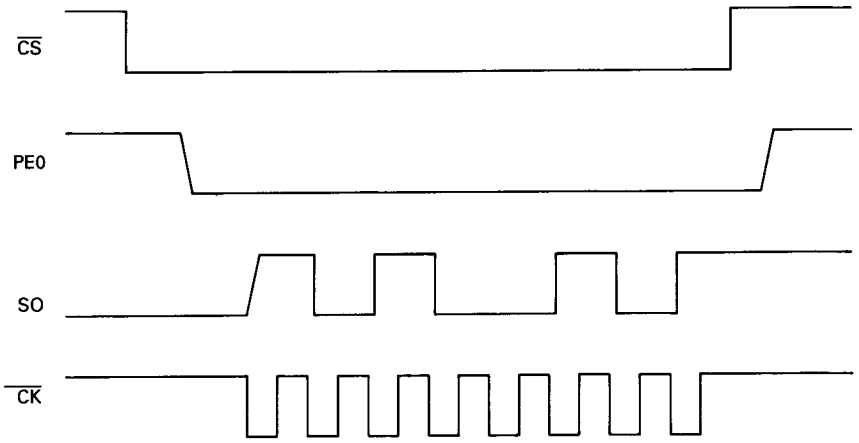

Fig. 5-3 Timing Chart of COMMAND and DATA

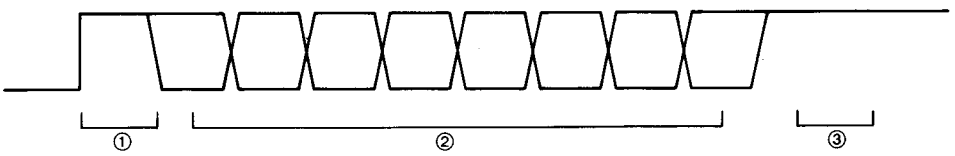

① START BIT
② DATA BITS
③ STOP BIT

Fig. 5-4 Cloning Data Construction

- **PC 3 ($\overline{\text{FUNC}}$)**

This is an input port of the function switch. When the function key is pressed, this port is at the LOW level position and the secondary functions of the keyboard can be selected.

When this port is in the LOW level position while power switched ON, the MPU is in the receive mode of cloning.

- **PC 2 (SEND)**

This is a T/R switching signal input port. When this port is in the HIGH position the MPU is in transmit mode. The port is also used to input cloning signals.

- **PC 1 (SQL)**

This is an input port for squelch signals. When the squelch is open, this port is in the HIGH level position.

- **PC 0 (UNLK)**

This is an input port for unlocked signals. When the PLL is unlocked, this port is at a LOW level position.

(5) SERIAL PORTS

- **SO**

This is an output port of the shift register inside the MPU. It outputs N-data, LCD commands, and LCD data.

- **$\overline{\text{SCK}}$**

This port outputs timing signals of data for transfer to the SO port. SO is altered by the trailing edge of the $\overline{\text{SCK}}$ signal.

(6) OTHERS PORTS

- **INT 0**

This is an input port for detector signals of the TONE IC. When this port is at the HIGH level position the CALL indicator is illuminated.

- **INT 1**

This is an input port for stand-by signals. When the power switch is OFF this port is in the HIGH level position. The LCD then is not illuminated and each port is initialized.

- **TO**

This port outputs a BEEP sound.

- **$\overline{\text{RD}}$**

This port outputs timing signals when the MPU receives data (reading) to the RAM IC chip.

- **$\overline{\text{WR}}$**

This port outputs timing signals when the MPU transfers data from (writing) the RAM IC chip.

5 - 5 - 2 RAM

μPD446C is a 2048 word 8 bit C-MOS RAM IC chip. This RAM memorizes operating channels, PLL T/R N-data, TONE numbers, shift frequencies, TONE-data tables, etc. The data are written or read to addresses which are selected by PE 0 to PE 10 of the MPU. Writing and reading timing depend on ports $\overline{\text{RD}}$ and $\overline{\text{WR}}$.

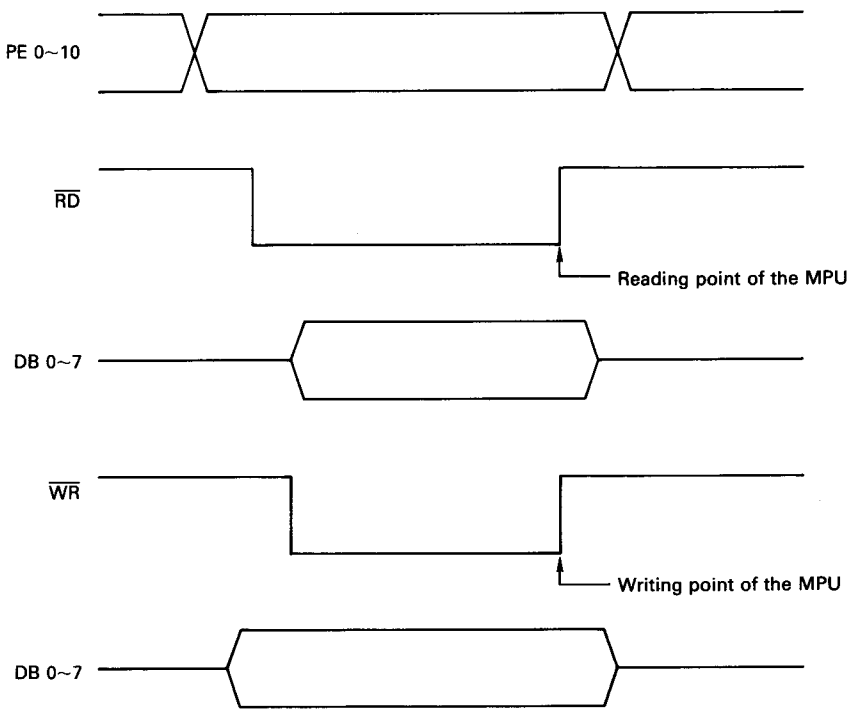

Fig. 5-5 Timing Chart of Memory Reading/Writing

5 - 5 - 3 RESET CIRCUIT

After the circuit is switched ON, the +5V line becomes 5V and Q703 is activiated. The collector of Q703 thus is at the HIGH level position. Pin 12 of IC704E is in the LOW level position and pin 10 of IC704D is changed from LOW level to HIGH. The result is that the MPU and the LCD driver are reset.

At the time the power switch is turned off, Q703 also is OFF. Pin 12 of IC704E then is in the HIGH position and is applied to INT 1 of the MPU, resulting the MPU becomes stand-by operate.

5 - 5 - 4 DISPLAY CIRCUIT

IC602, in the DISPLAY unit is the LCD driver, and segments on the LCD are displayed with 1/2 bias and 1/2 duty conditions. The bias voltage is generated via the dividing resistor which consists of R605, R606 and R607. Output from CM1, CM2, and S0 to S31 on the IC601 drive the LCD segments.

5 - 5 - 5 DTMF CIRCUIT

IC602, the DTMF encoder, generates tone signals that match DTMF telephone dialing tones. While transmitting, Q704 will be activated, thus sending voltage to IC602 and to the CONT of IC603.

When there is input from the keyboard, the proper frequency dividing ratio which divides X601 is selected to output a set of audio frequencies.

5 - 5 - 6 CTCSS CIRCUIT

IC706 generates 37-type tones of programmable CTCSS encoder/decoder. When a tone number is set, data is sent to encoder/decoder. When a tone number is set, data is sent to IC706 from the MPU (S0 ~ S5). The $\overline{T}$/R port is a switching port for transmitting and receiving for IC706. When this port is in the LOW position, IC706 is in the transmit mode, and when the port is in the HIGH position IC706 is in the receive mode. However, while transmitting with tone number 0, the $\overline{T}$/R port of IC703 is in the HIGH position, and thus no tone signal is output from IC706.

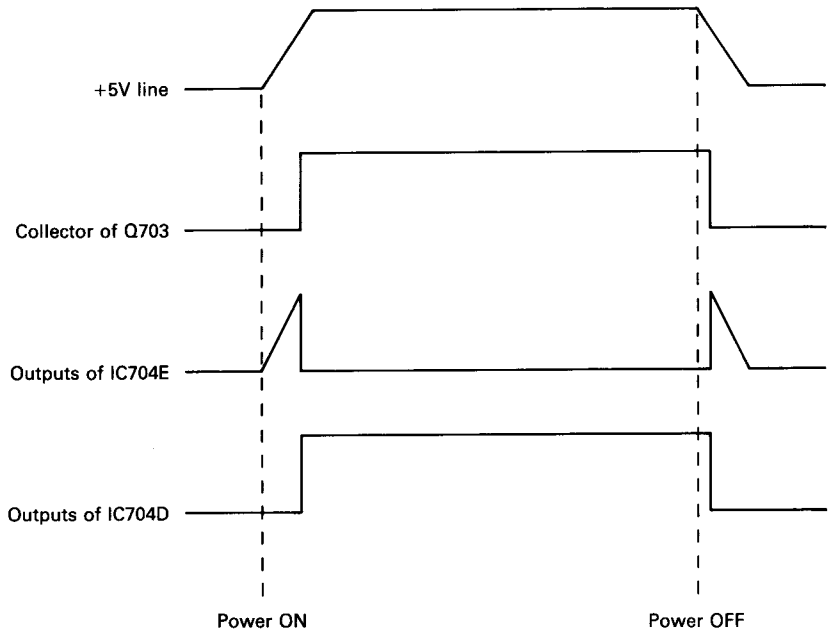

Fig. 5-6 Reset Timing Chart

SECTION 6 MECHANICAL PARTS AND DISASSEMBLY

6 - 1 DISASSEMBLY OF THE CASE

1. Turn the POWER SWITCH OFF and remove the battery pack.

2. Remove screw Ⓐ and four screws Ⓑ on the rear panel, and four screws Ⓒ on the bottom as shown in the figure.

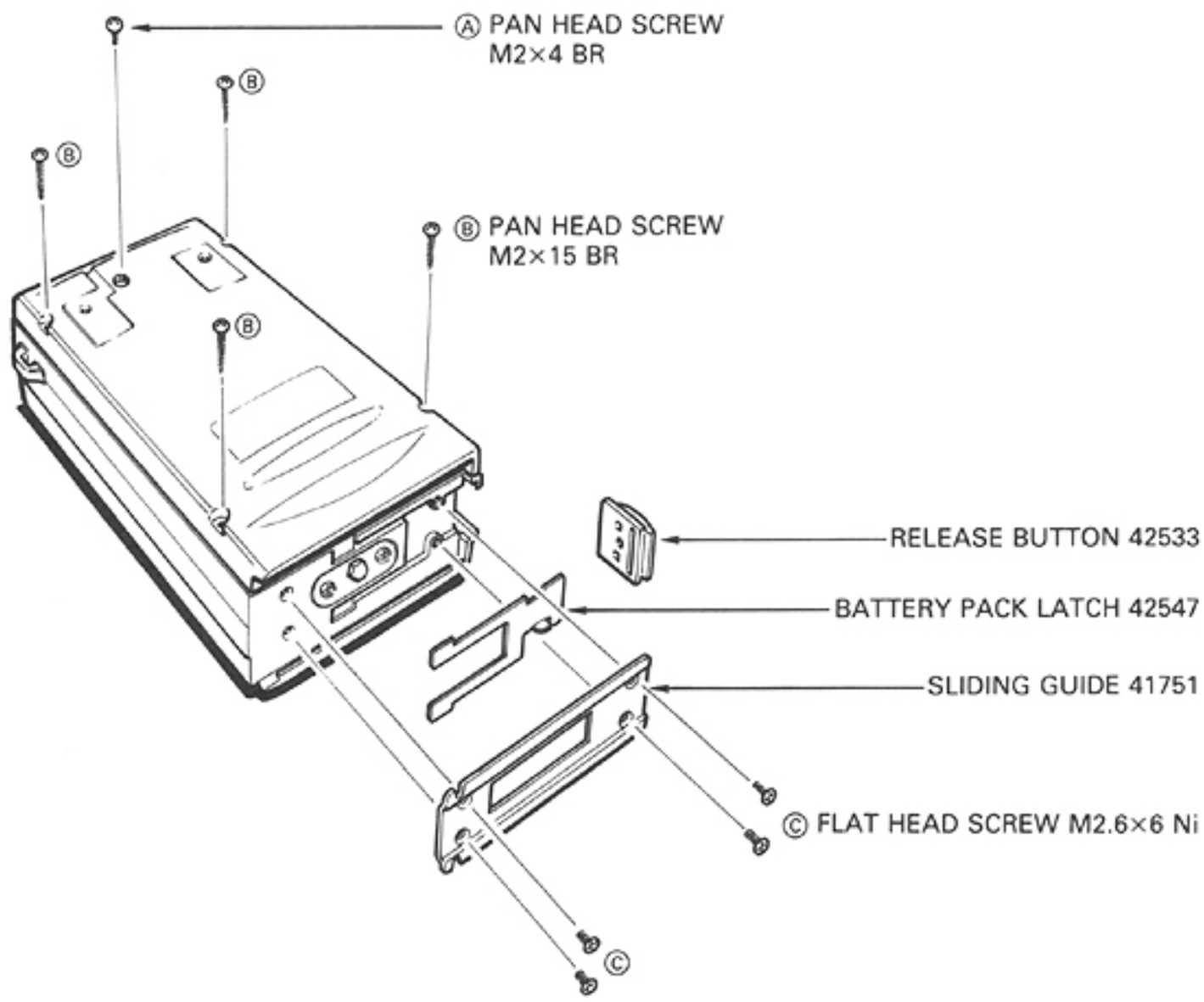

3. Remove the rear panel as shown in the figure.

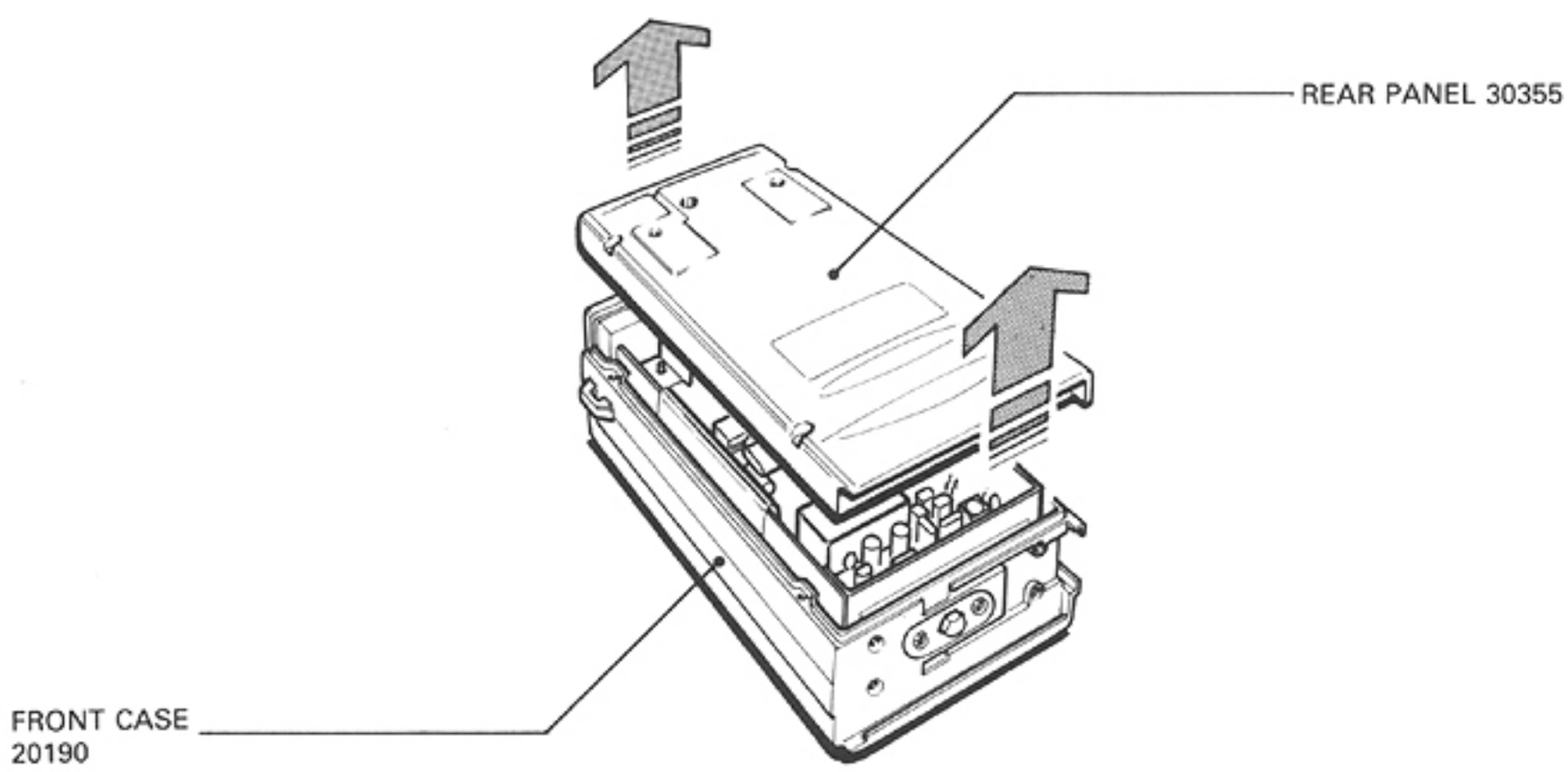

4. Slide the inner frame upward slightly as shown in the figure, and lift the frame away from the front cover. At this time, be careful not to damage the flexible board.

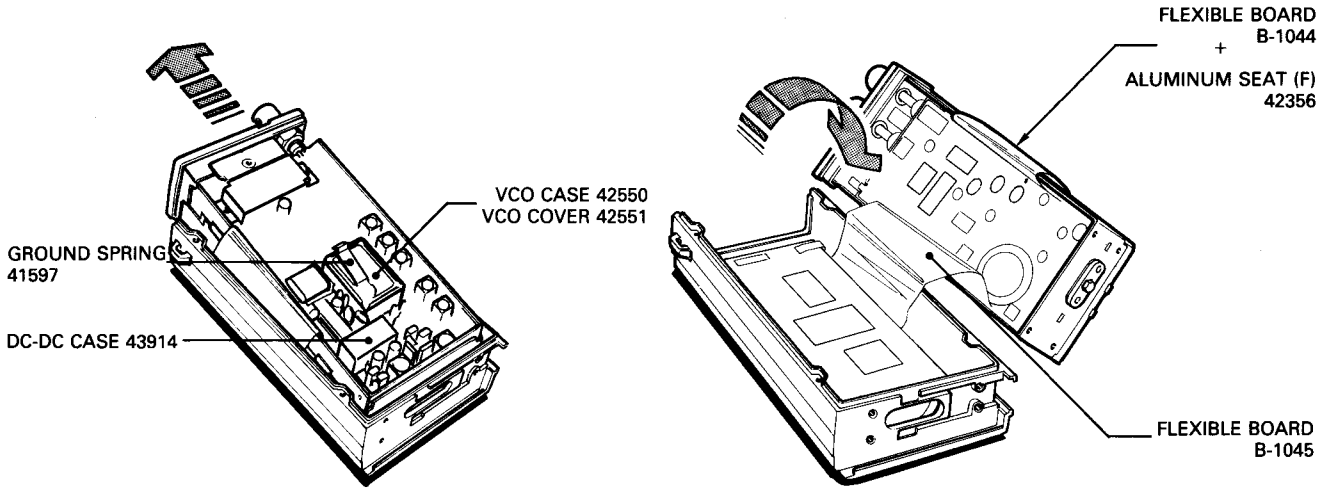

5. To open the chassis, remove the two knobs on the top panel (VOLUME and SQUELCH) and press IN the MONITOR and HIGH/LOW buttons. After unscrewing the four screws on the sides of the chassis, open the chassis as shown in the figure.

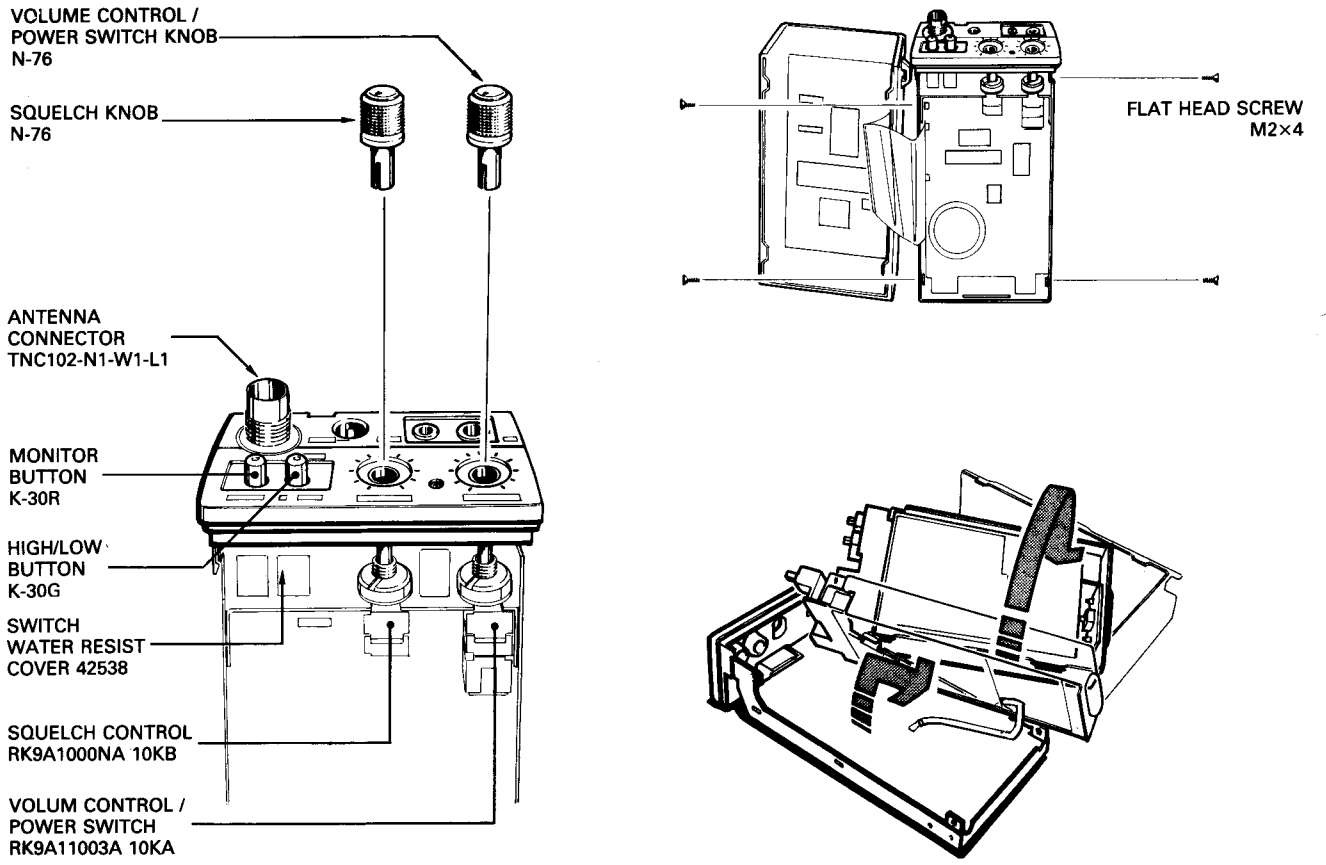

6 - 2 DISASSEMBLY OF THE TOP PANEL

1. Remove the screw Ⓐ.

2. Remove the TNC-NUT and the TNC-WASHER.

3. Remove the ANTENNA CONNECTOR by unsoldering point Ⓑ on the parts side and point Ⓒ on the soldering side of the PLL board.

4. Remove the TOP PANEL by slightly prying outward on both sides tabs (points Ⓓ) of the TOP PANEL.
   See the diagram below. Be careful not to break the tabs.

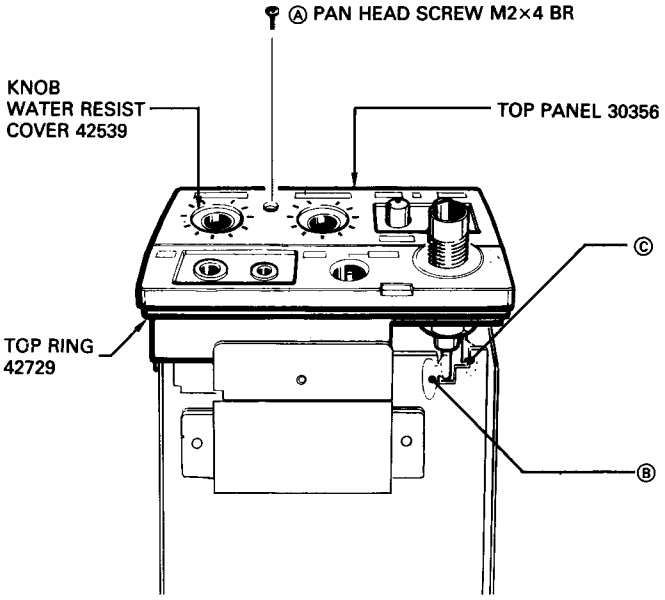

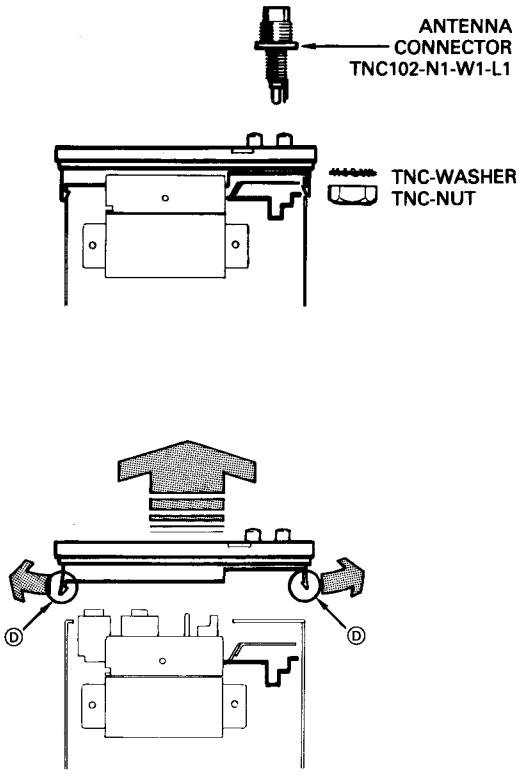

6 - 3 PA AND EXTERNAL JACK ASSEMBLY

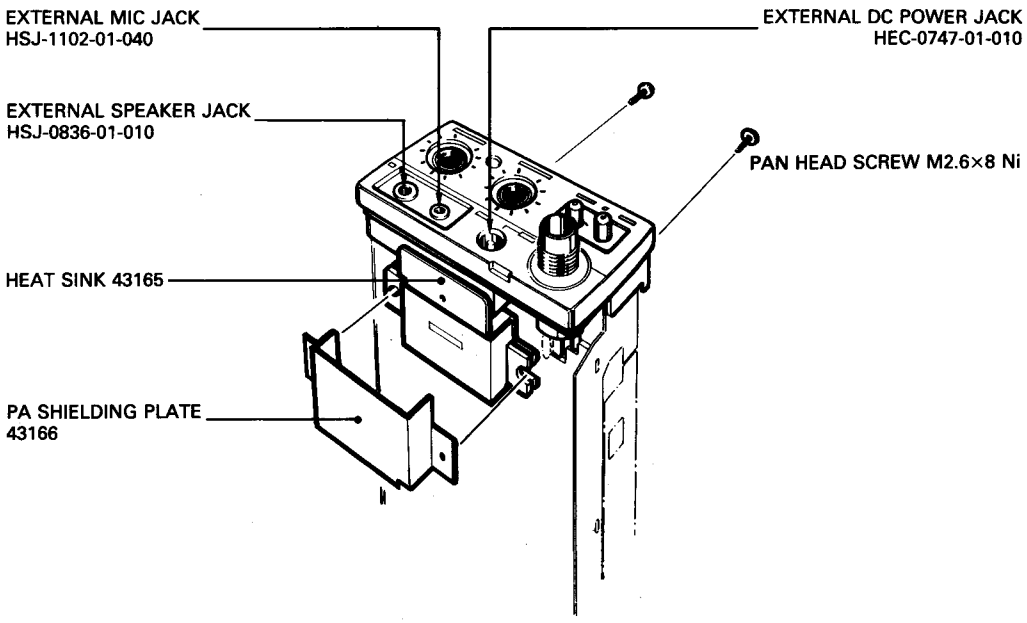

6 - 4 SPEAKER AND MICROPHONE ASSEMBLY

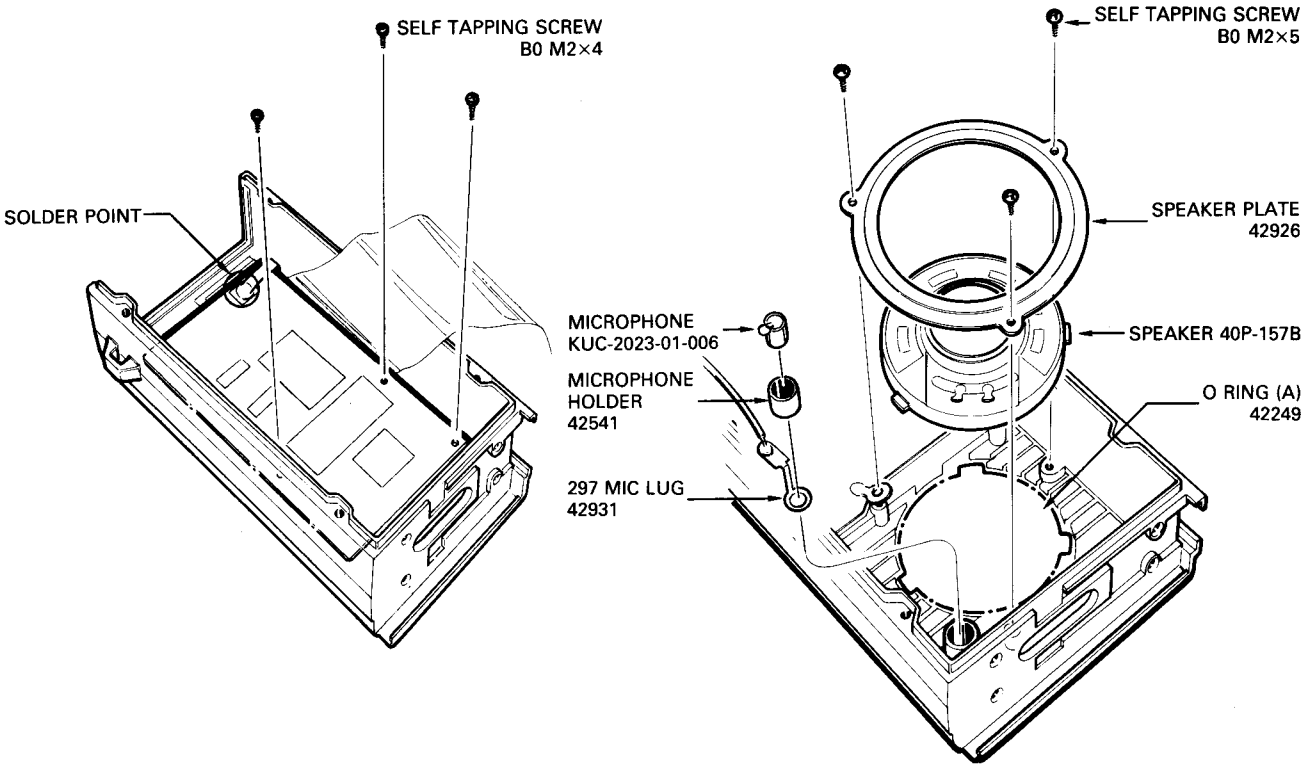

6 - 5 DISPLAY UNIT AND LCD ASSEMBLY

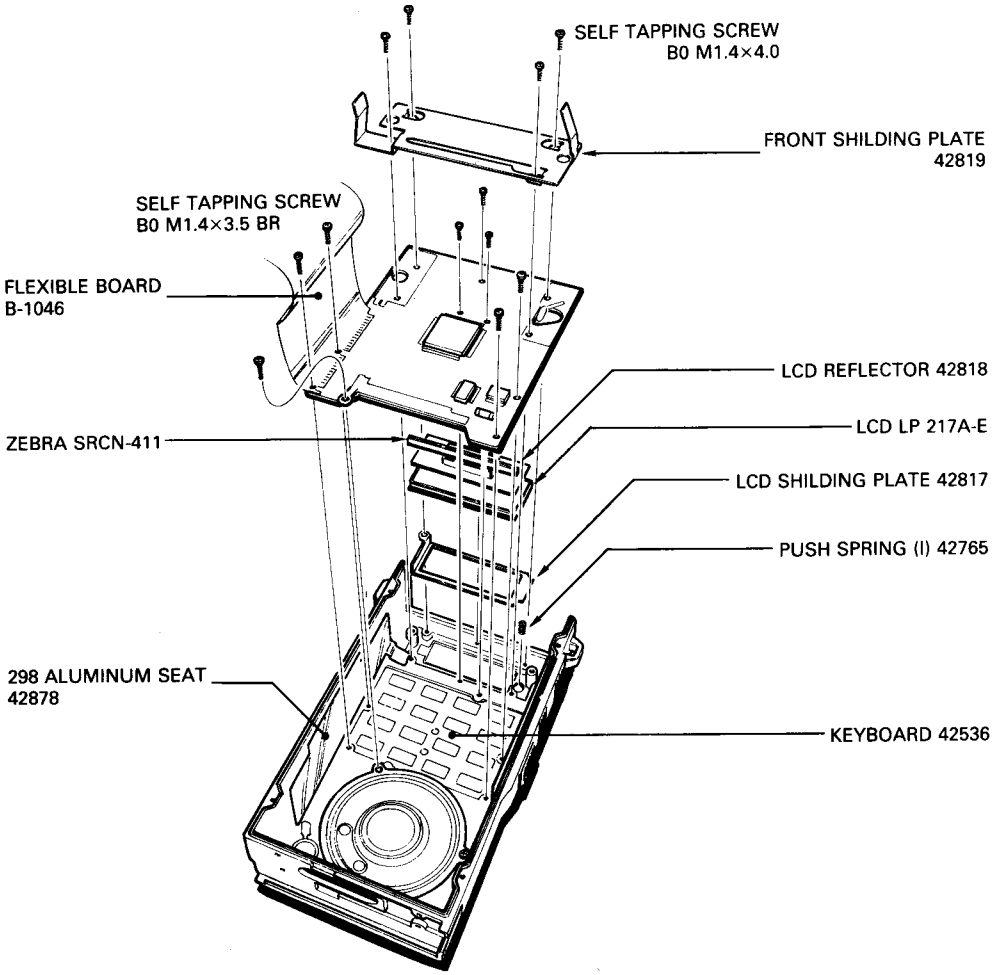

6 - 6 PTT SPRING ASSEMBLY

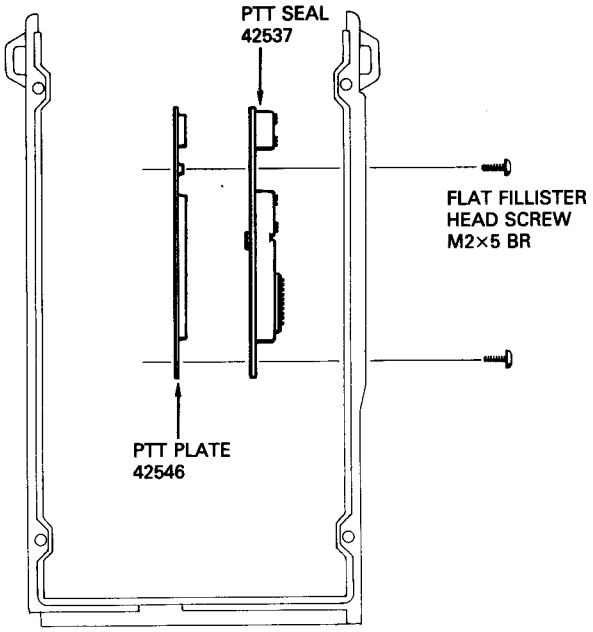

6 - 7 UNIT BOTTOM ASSEMBLY

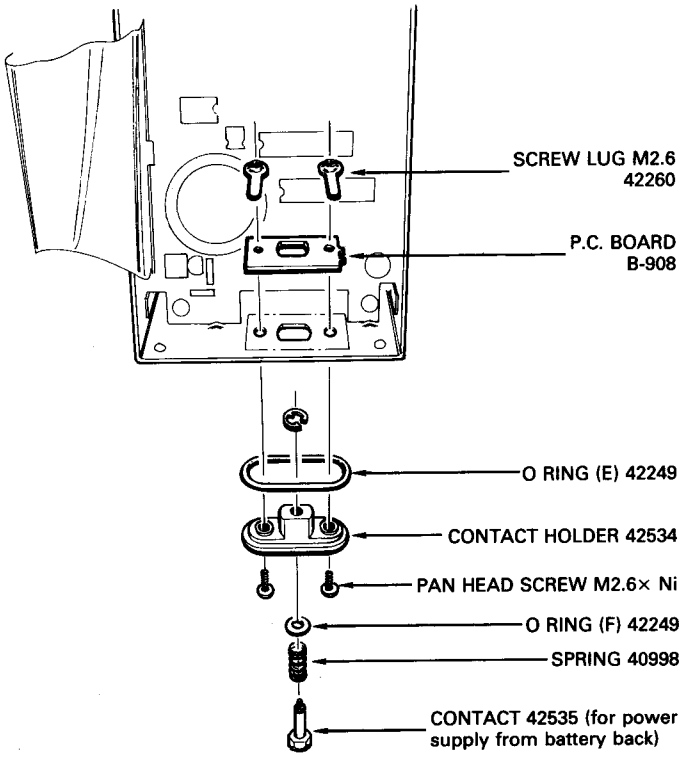

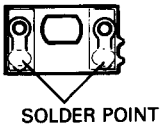

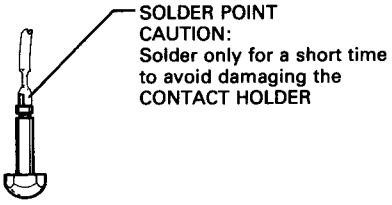

SECTION 7 MAINTENANCE AND ADJUSTMENT

7 - 1 PREPARATION BEFORE SERVICING

1. Detach the power cord and turn OFF the power switch before performing any work on the transceiver.

2. Do not short circuit components while making adjustments.

3. Use an insulated tuning tool for all adjustments.

4. Do not force any of the variable components. Tune them slowly and smoothly.

5. Follow the instructions exactly. If an indicated result is not obtained, repeat the instruction until the correct result is obtained.

6. Check the condition of connectors, solder joints and screws when adjustments are complete. Confirm that components do not touch each other.

7. There are several versions of this transceiver. Adjustment procedures and results may differ for each version. Be certain to follow the correct procedure for the transceiver you have.

8. Confirm defective operation of the transceiver first when checking an out-of-service unit. Verify that external sources do not cause the problem.

9. Use the correct tools and test equipment.

10. Remove the transceiver case as shown on Page 6-1.
    NOTE: Do not damage the flexible printed circuit when removing the case.

11. Remove the four screws to open the hinged chassis as shown on Page 6-2.

12. For transmission problems, attach a dummy load to the antenna connector. For reception problems, attach an antenna or signal generator to the antenna connector. Do not transmit into the signal generator.

13. Recheck for the suspected malfunction with the power switch on.

14. Check the defective circuit. Measure the DC voltages of the collector, base and emitter of each transistor.

15. It is convenient to short circuit an accessory mic connector plug and insert it into the microphone jack when troubleshooting the transmitter.

7 - 2 POWER SUPPLY CHECKES

INSTRUMENTS REQUIRED	CONNECTIONS
(1) VOLTAGE REGULATED POWER SUPPLY • OUTPUT VOLTAGE : DC 13.2V • CURRENT CAPACITY : 2A (2) RF POWER METER (TERMINAND TYPE) • MEASURING RANGE : 0~5W • FREQUENCY MINIMUM : AT LEAST 180MHz • IMPEDANCE : 50 Ω • SWR : LESS THAN 1:1.2 (3) VOLTMETER • INPUT IMPEDANCE : 50k Ω/V DC OR BETTER	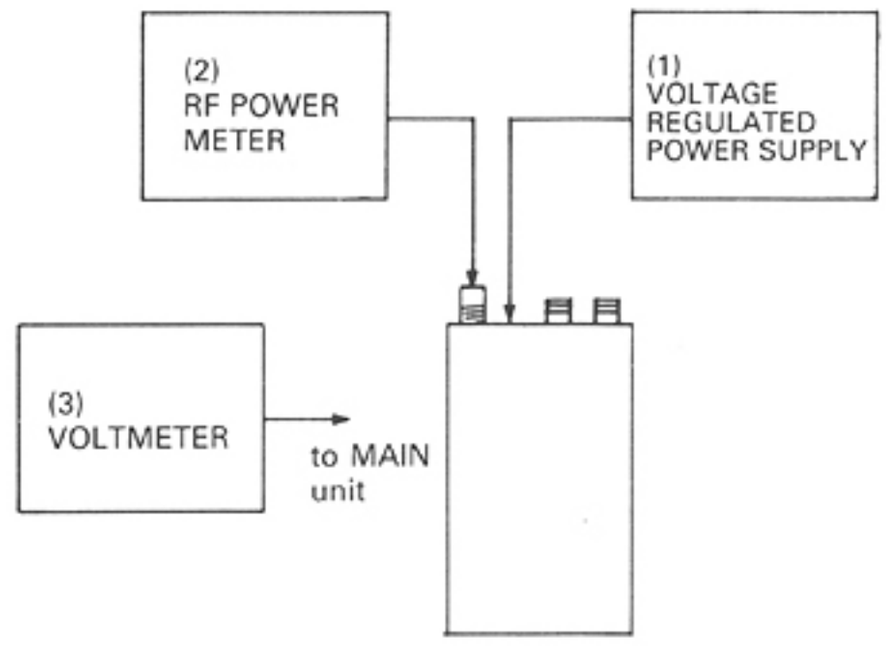

ADJUSTMENT		ADJUSTMENT CONDITIONS	MEASUREMENT		VALUE	ADJUSTMENT POINT	
			UNIT	LOCATION		UNIT	ADJUST
+5V	1	• Receive mode	MAIN	See diagram	5V		Verify
R5	1	• Receive mode	MAIN	See diagram	5V		Verify
PSAV	1	• Receive mode	MAIN	See diagram	5V		Verify
UNLK	1	• Receive mode	MAIN	See diagram	5V		Verify
T5	1	• Transmit mode	MAIN	See diagram	5V		Verify
+5	1	• Receive mode	MAIN	See diagram	5V		Verify

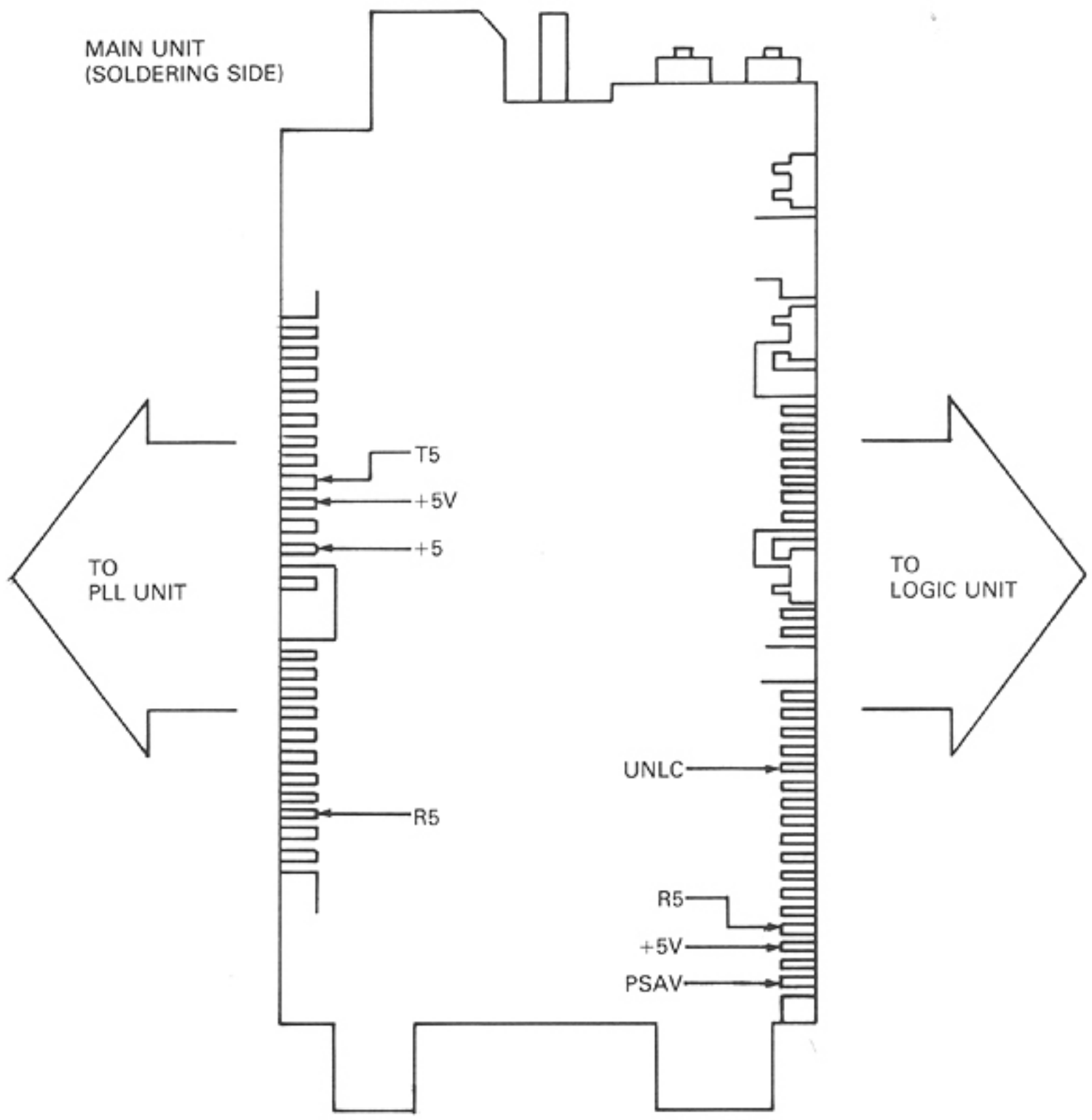

7 - 3 PLL ADJUSTMENT

INSTRUMENTS REQUIRED	CONNECTIONS
(1) VOLTAGE REGULATED POWER SUPPLY • OUTPUT VOLTAGE : DC 13.2V • CURRENT CAPACITY : 2A (2) RF POWER METER (TERMINAND TYPE) • MEASURING RANGE : 0~5W • FREQUENCY MINIMUM : AT LEAST 180MHz • IMPEDANCE : 50 Ω • SWR : LESS THAN 1:1.2 (3) VOLTMETER • INPUT IMPEDANCE : 50k Ω/V DC OR BETTER (4) FREQUENCY COUNTER • FREQUENCY RANGE : AT LEAST 180MHz • ACCURACY : BETTER THAN ±1PPM • SENSITIVITY : 100mV OR BETTER	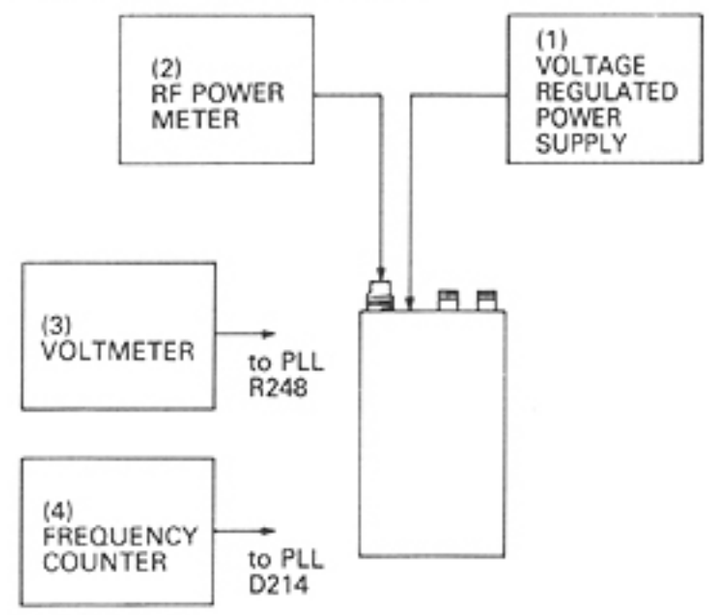

ADJUSTMENT		ADJUSTMENT CONDITIONS	MEASUREMENT		VALUE	ADJUSTMENT POINT	
			UNIT	LOCATION		UNIT	ADJUST
LOCK VOLTAGE	1	• Operating frequency: 148.00MHz (#01, #03) 136.00MHz (#02) • HIGH/LOW POWER SWITCH: LOW	PLL	Connect a voltmeter between R248 and GROUND.	4.0V (#01, #03) 2.0V (#02)	PLL	L221
	2	• Operating frequency: 174.00MHz (#01, #03) 144.00MHz (#02) • Transmit mode	PLL		bellow 16V		Verify
REFERENCE FREQUENCY	1	• Operating frequency: 148.00MHz (#01, #03) 136.00MHz (#02) • HIGH/LOW POWER SWITCH: LOW • Receive mode	PLL	Connect a frequency counter to cathode of D214.	126.200 MHz (#01, #03) 114.200 MHz (#02)	PLL	C288
	2	• Operating frequency: 174.00MHz (#01, #03) 144.00MHz (#02) • Transmit mode			174.00 MHz (#01, #03) 144.00 MHz (#02)		Verify

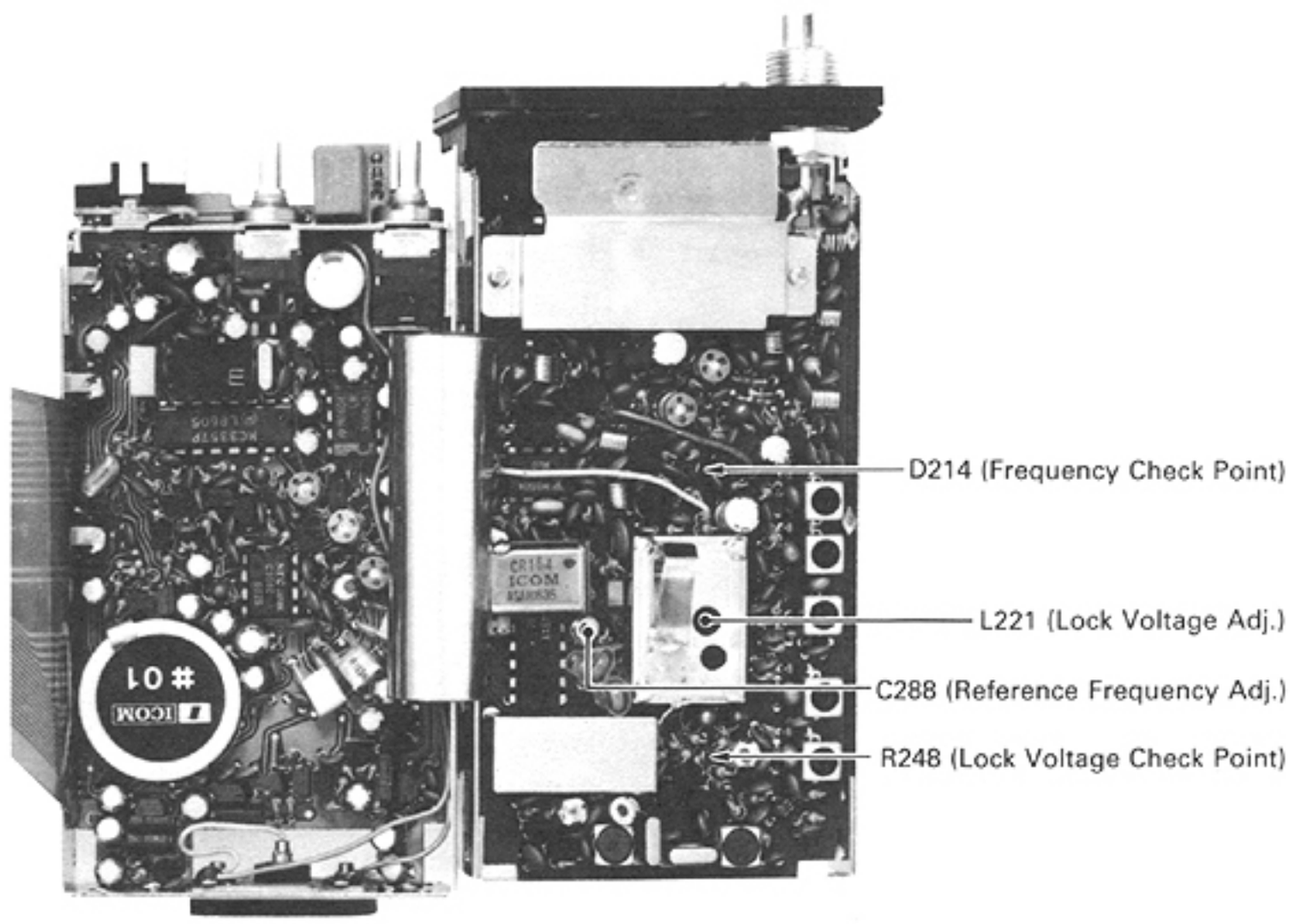

7 - 4 TRANSMITTER ADJUSTMENT

INSTRUMENTS REQUIRED	CONNECTIONS
(1) VOLTAGE REGULATED POWER SUPPLY • OUTPUT VOLTAGE : DC 13.2V • CURRENT CAPACITY : 2A (2) RF POWER METER (TERMINAND TYPE) • MEASURING RANGE : 0~5W • FREQUENCY MINIMUM : AT LEAST 180MHz • IMPEDANCE : 50Ω • SWR : LESS THAN 1:1.2 (3) AUDIO GENERATOR • OUTPUT FREQUENCY : 50~3000Hz • OUTPUT LEVEL : 0~200mV • DISTORTION : LESS THAN 0.1% (4) AMMETER • MEASURING RANGE : 0~2A (5) AC MILLIVOLTMETER • MEASURING RANGE : 10mV~2V (6) FM DEVIATION METER • FREQUENCY MINIMUM : AT LEAST 180MHz • MEASURING RANGE : 0~±10kHz • EQUIPPED FILTERS : HPF OFF LPF 20kHz • DE-EMPHASIS : OFF (7) DIRECTIONAL COUPLER • FREQUENCY MINIMUM : AT LEAST 180MHz	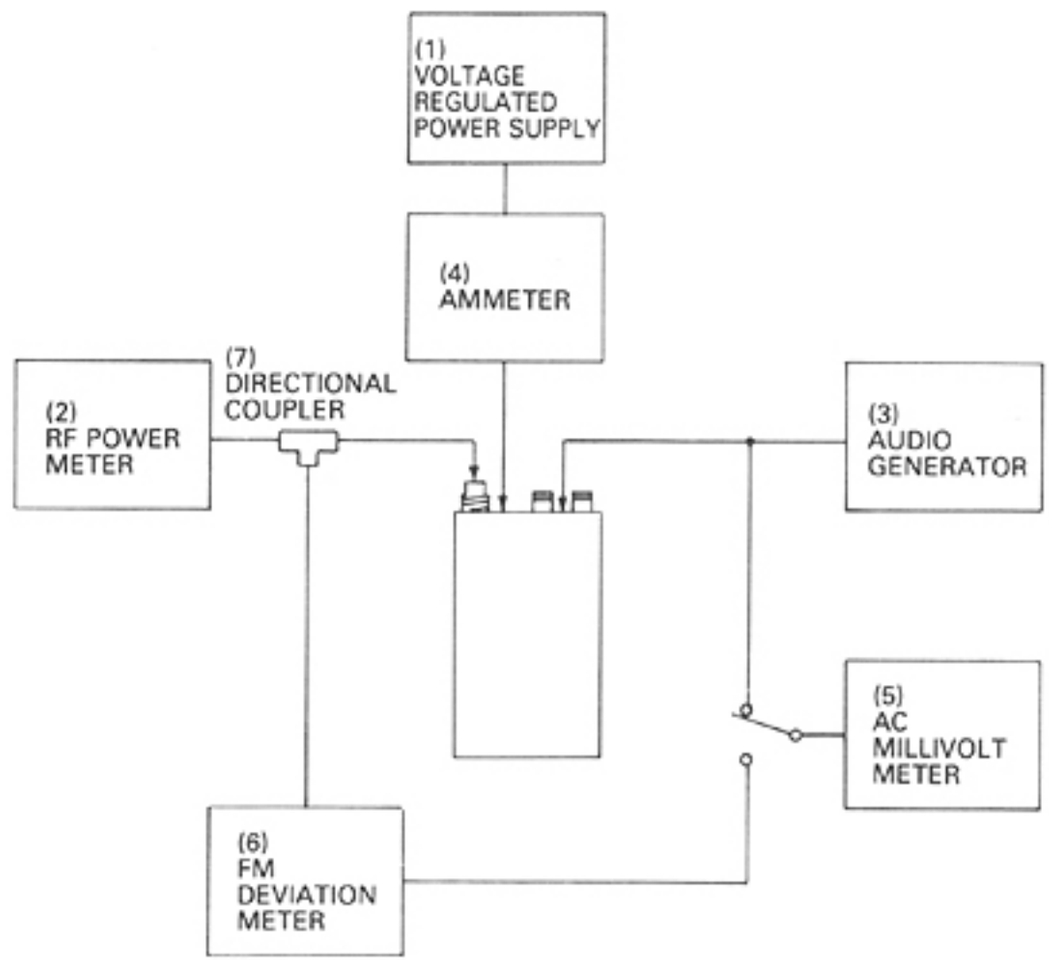

ADJUSTMENT		ADJUSTMENT CONDITIONS	MEASUREMENT		VALUE	ADJUSTMENT POINT	
			UNIT	LOCATION		UNIT	ADJUST
OUTPUT POWER SET	1	• Operating frequency: 161.00MHz (#01, #03) 140.00MHz (#02) • HIGH/LOW POWER SWITCH: HIGH • Transmit mode	Top panel	Connect a power meter to ANTENNA CONNECTOR. Connect an ammeter in series between the power supply and the transceiver.	5W (at 13.2V) Less than 1.4A 3W (at 8.4V) Less than 1.25A	PLL	R272
	2	• HIGH/LOW POWER SWITCH: LOW			0.5W Less than 0.55A	PLL	R275
VERIFY OUTPUT POWER AT THE BAND EDGES	1	• Operating frequency: 148.00MHz and 174.00MHz (#01, #03) 136.00MHz and 144.00MHz (#02) • HIGH/LOW POWER SWITCH: HIGH	Top panel	Connect a power meter to ANTENNA CONNECTOR.	4.5~5.5W (at 13.2V) 2.5~3.5W (at 8.4V)		Verify
	2	• Operating frequency: 148.00MHz and 174.00MHz (#01, #03) 136.00MHz and 144.00MHz (#02) • HIGH/LOW POWER SWITCH: LOW			0.4~0.6W on both upper and lower band edges		
DEVIATION	1	• Operating frequency: 161.00MHz (#01, #03) 140.00MHz (#02) • HIGH/LOW POWER SWITCH: HIGH • Apply AF signal 1kHz/170mV to MIC CONNECTOR. • Transmit mode	Top panel	Connect a deviation meter to ANTENNA CONNECTOR through the attenuator.	±4.0kHz (#01, #02) ±2.0kHz (#03)	MAIN	R186
	2	• Apply AF signal 1kHz/17mV (20dB down) to MIC CONNECTOR. • Transmit mode			±3.0kHz~±4.0kHz (#01, #02) ±1.5kHz~±2.0kHz (#03)		Verify
	3	• Operating frequency: 148.00MHz and 174.00MHz (#01, #03) 136.00MHz and 144.00MHz (#02) • Apply AF signal 1kHz/170mV to MIC CONNECTOR. • Transmit mode			Less than ±4.6kHz (#01, #02) Less than ±2.3kHz (#03)	MAIN	Verify

ADJUSTMENT		ADJUSTMENT CONDITIONS	MEASUREMENT		VALUE	ADJUSTMENT POINT	
			UNIT	LOCATION		UNIT	ADJUST
VERIFY TRANSMIT S/N RATIO	1	• Apply AF signal 1kHz/17mV to MIC CONNECTOR. • Transmit mode	Top panel	Connect a millivoltmeter to the deviation meter.	Recording the reading		
	2	• Apply no signal to MIC CONNECTOR.			Recording the reading Verify that the recorded ratio (See STEP 1 and STEP 2) must be greater than 40 dB (#01, #02) 35 dB (#03).		
CTCSS DEVIATION	1	• Operating frequency: 161.00MHz (#01, #03) 140.00MHz (#02) • Tone number: 01 • Apply no signal to MIC CONNECTOR. • Transmit mode	Top panel	Connect a deviation meter to ANTENNA CONNECTOR through the attenuator.	±0.75kHz (#01, #02) ±0.3kHz (#03)	MAIN	R115
	2	• Operating frequency: 148.00MHz and 174.00MHz (#01, #03) 136.00MHz and 144.00MHz (#02) • Tone number: 01 and 37 • Apply no signal to MIC CONNECTOR.			±0.5~±1.0kHz (#01, #02) ±250~±500Hz (#03)		Verify
DTMF OPERATION AND DEVIATION	1	• Operating frequency: 161.00MHz (#01, #03) 140.00MHz (#02) • Tone number: 01 and 37 • Apply no signal to MIC CONNECTOR. • Push and hold PTT SWITCH then push [ENT] key.		Rlease the [PTT] SWITCH to check the transmit holding time	Keep the transmit mode for approx. 1 second.		Verify
	2	• Push and hold the [PTT] SWITCH then push ENT key for a while.	Top panel	Connect a deviation meter to ANTENNA CONNECTOR through the attenuator.	±3.5kHz (#01, #02) ±1.75kHz (#03)	MAIN	R112
	3	• Push and hold the [PTT] SWITCH then push each on the KEYBOARD.	Front panel		To verify each key's tone sound from the speaker.		

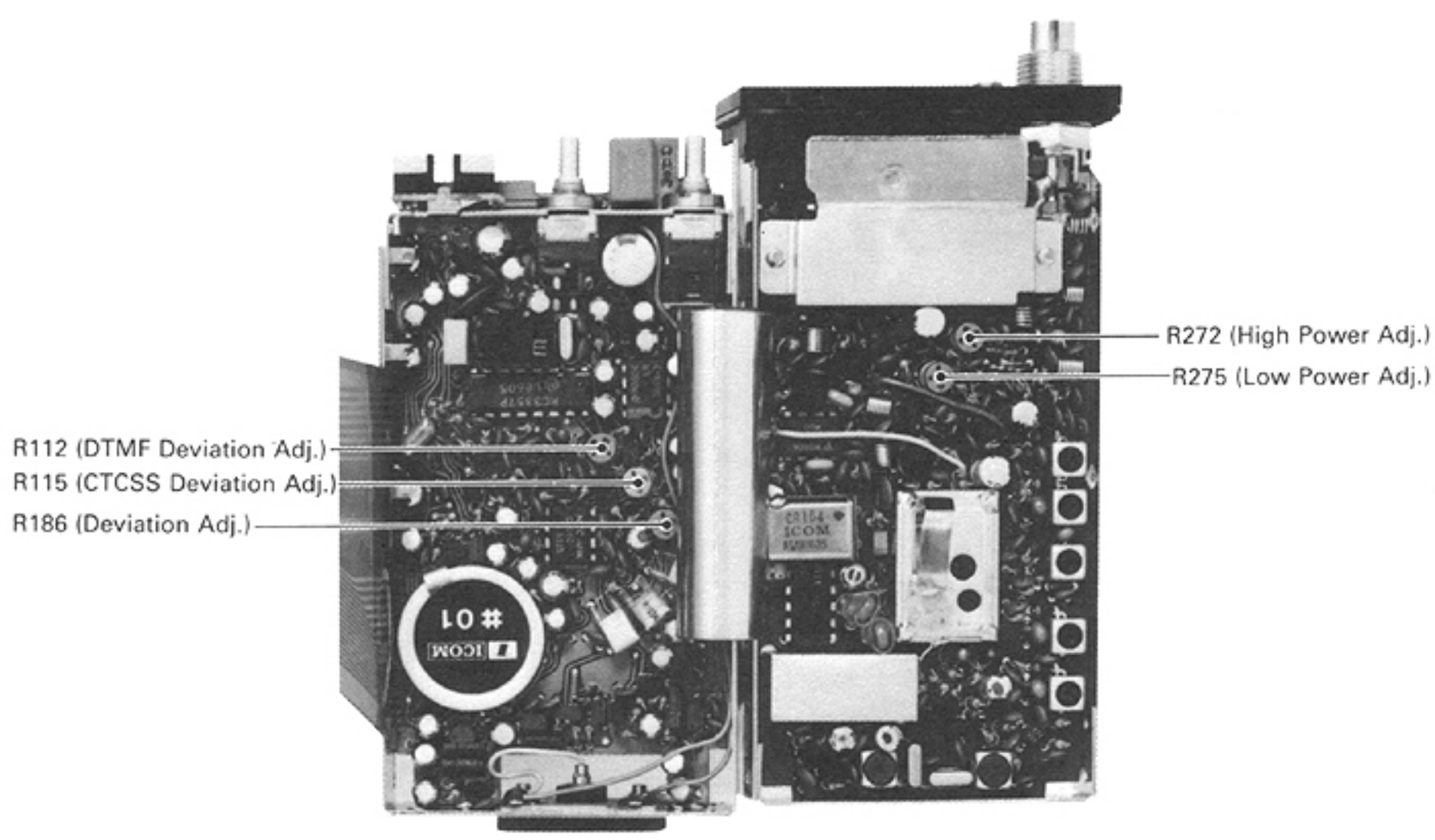

7 - 5 RECEIVER ADJUSTMENT

INSTRUMENTS REQUIRED

(1) VOLTAGE REGULATED POWER SUPPLY
- OUTPUT VOLTAGE : DC 13.2V
- CURRENT CAPACITY : 2A

(2) OSCILLOSCOPE
- FREQUENCY RANGE : DC~20MHz
- MEASURING RANGE : 0.01~10V

(3) AC MILLIVOLTMETER
- MEASURING RANGE : 10mV~10V

(4) SIGNAL GENERATOR
- FREQUENCY RANGE : 130~180MHz
- OUTPUT LEVEL : 0.1μV~32mV

(5) DISTORTION METER
- FREQUENCY RANGE : 1kHz±10Hz
- MEASURING RANGE : 1%~100%

(6) EXTERNAL SPEAKER
- IMPEDANCE : 8Ω

(7) AUDIO GENERATOR
- OUTPUT FREQUENCY : 50~3000Hz
- OUTPUT LEVEL : 0~200mV
- DISTORTION : LESS THAN 0.1%

CONNECTIONS

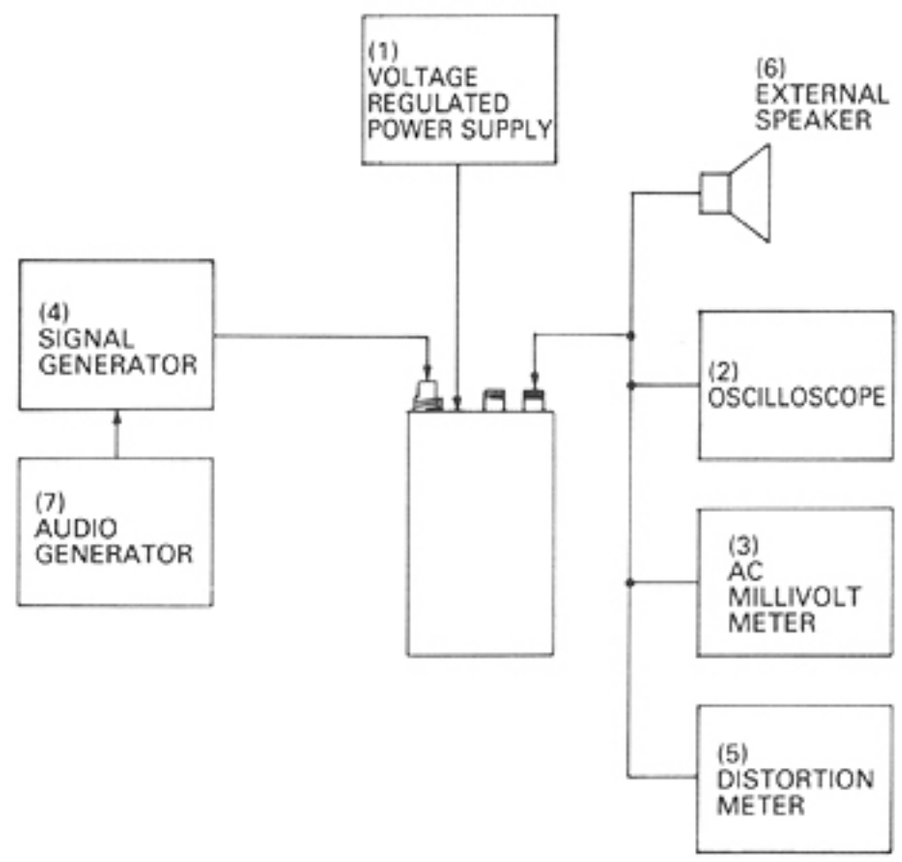

ADJUSTMENT		ADJUSTMENT CONDITIONS	MEASUREMENT		VALUE	ADJUSTMENT POINT	
			UNIT	LOCATION		UNIT	ADJUST
SENSITIVITY	1	• Operating frequency: 161.00MHz (#01, #03) 144.00MHz (#02) • MONITOR SWITCH: ON • SQUELCH: Open • Apply RF signal to ANTENNA CONNECTOR. Level: 0.32μV (−97dBm) Dev.: ±3.5kHz (#01, #02) ±1.75kHz (#03) Mod.: 1kHz	Top panel	Connect a distortion meter to the EXTERNAL SPEAKER JACK with an 8Ω load.	Minimum distortion level (Less than 0.4μV for 12dB SINAD)	PLL	
		NOTE: Adjust coils as above for 2 or 3 times.					
VERIFY SENSITIVITY AT THE BAND EDGES	1	• Operating frequency: 148.00MHz and 174.00MHz (#01, #03) 136.00MHz and 144.00MHz (#02) • Apply RF signal to ANTENNA CONNECTOR. Level: 0.4μV (−115dBm) Dev.: ±3.5kHz (#01, #03) ±1.75kHz (#02)	Top panel	Connect a distortion meter to the EXTERNAL SPEAKER JACK with an 8Ω load.	Less than 0.4μV for 12dB SINAD on both upper and lower band edges.		Verify
TONE SQUELCH SENSITIVITY	1	• Operating frequency: 161.00MHz (#01, #03) 140.00MHz (#02) • MONITOR SWITCH: OFF • Tone number: 01 • Apply RF signal to ANTENNA CONNECTOR. Level: 0.4μV (−115dBm) Dev.: ±3.5kHz (#01, #02) ±1.75kHz (#03) Mod.: 1kHz	Top panel	Connect a speaker to the EXTERNAL SPEAKER JACK.	No sound from the speaker		Verify
	2	• Apply RF signal to ANTENNA CONNECTOR. Level: 0.4μV (−115dBm) Dev.: ±3.5kHz (#01, #02) ±1.75kHz (#03) Mod.: 67Hz			Receive signal sound from the speaker "CALL" INDICATOR lights up.		Verify

ADJUSTMENT		ADJUSTMENT CONDITIONS	MEASUREMENT		VALUE	ADJUSTMENT POINT	
			UNIT	LOCATION		UNIT	ADJUST
AF OUTPUT	1	• Apply RF signal to ANTENNA CONNECTOR. Level: 32μV (−77dBm) Dev.: ±3.5kHz (#01, #02) ±1.75kHz (#03) Mod.: 1kHz • MONITOR SWITCH: ON	Top panel	Connect an AC millivoltmeter to the EXTERNAL SPEAKER JACK with an 8 Ω load.	Greater than 2V at 10% distortion		Verify
TIGHT SQUELCH SENSITIVITY	1	• SQUELCH CONTROL: MAX. C.W. • Apply RF signal to ANTENNA CONNECTOR. Level: Approx. 1μV (−107dBm) Dev.: ±3.5kHz (#01, #02) ±1.75kHz (#03) Mod.: 1kHz	Top panel	Connect a speaker to the EXTERNAL SPEAKER JACK.	Squelch opens		Verify

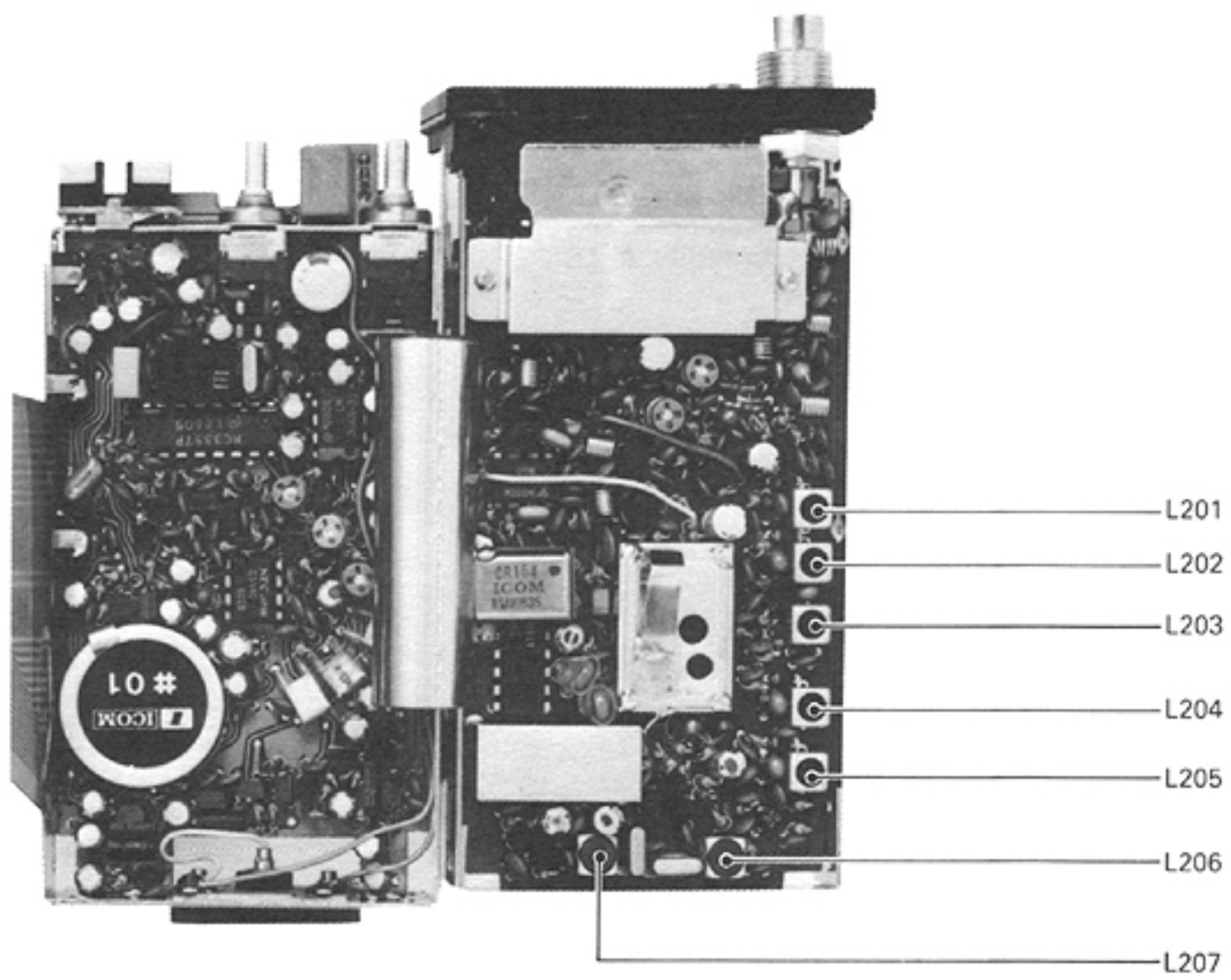

SECTION 8 VOLTAGE DIAGRAMS

8 - 1 MAIN UNIT VOLTAGE DIAGRAM

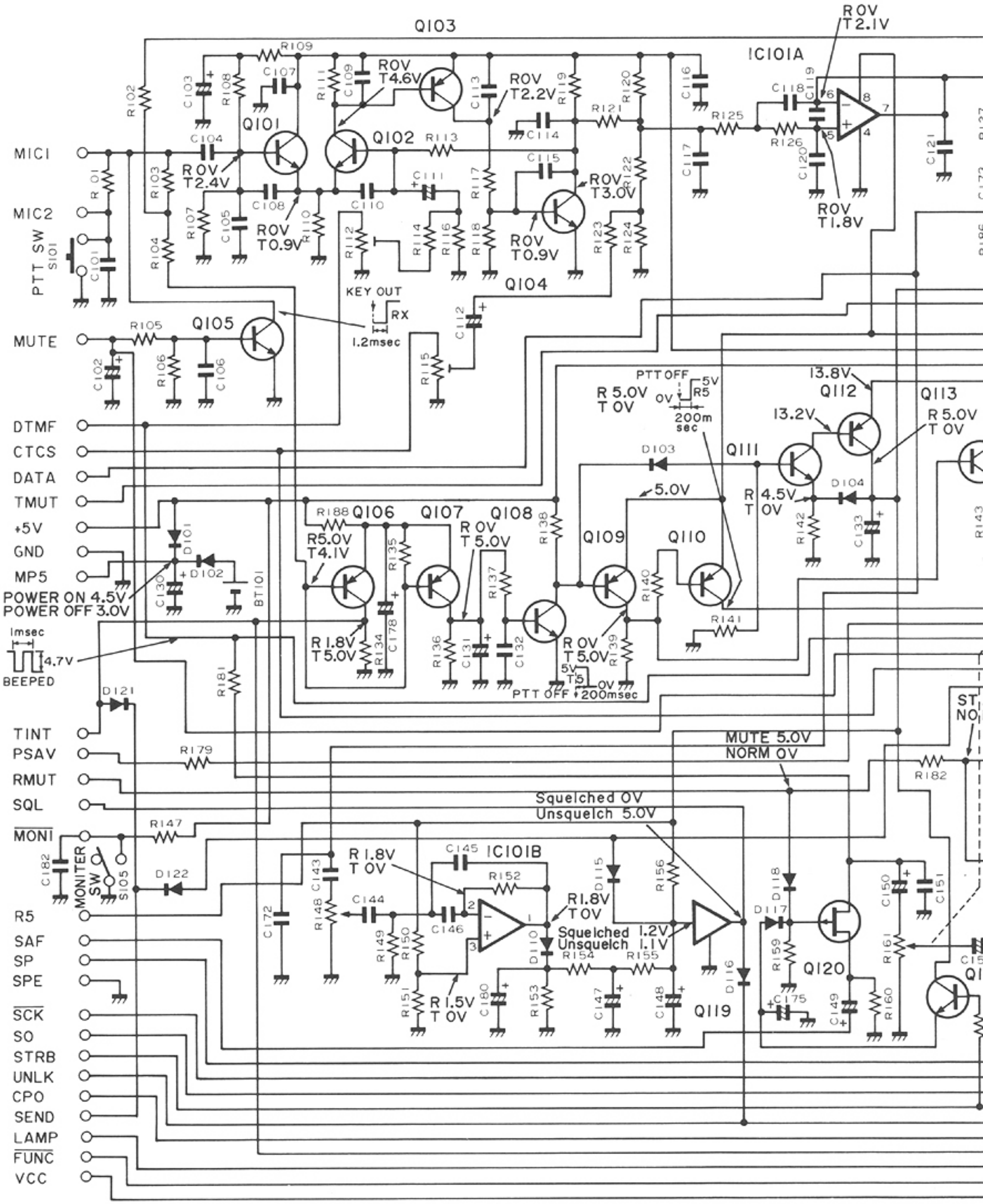

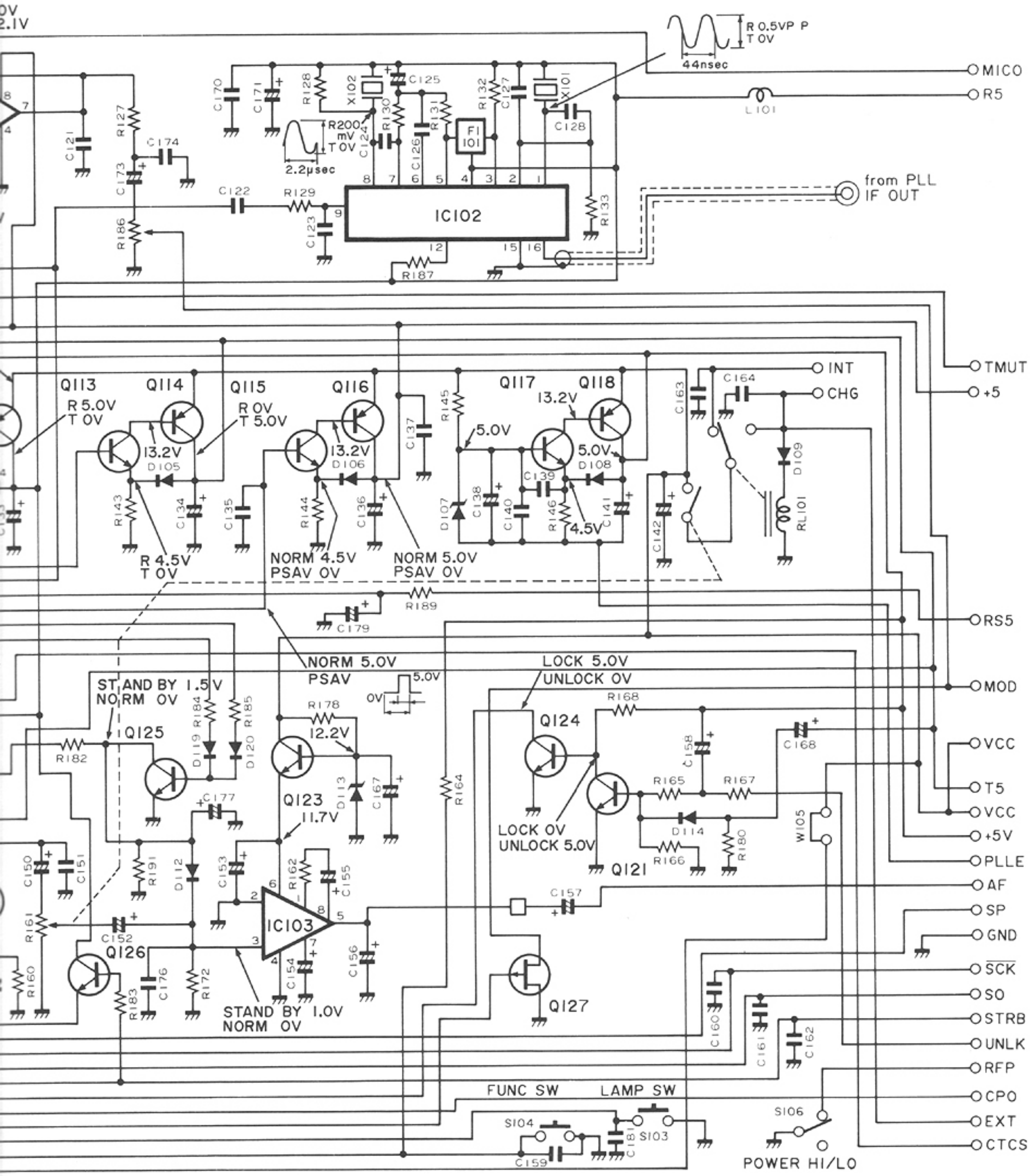
0V
2.1V
R 0.5VP P
T 0V
44nsec
MICO
R5
L101
C170
C171
R128
X102
C125
R130
C124
C126
R131
F1
101
R132
C127
X101
C128
R200
mV
T 0V
2.2μsec
C121
R127
C174
C173
R186
C122
R129
C123
IC102
R133
R187
from PLL
IF OUT
TMUT
+5
INT
CHG
Q113
Q114
Q115
Q116
Q117
Q118
R 5.0V
T 0V
R 0V
T 5.0V
13.2V
D105
D106
D108
5.0V
R143
C134
C135
R144
C136
C137
R145
D107
C138
C140
C139
R146
4.5V
C141
C142
C163
C164
D109
RL101
R 4.5V
T 0V
NORM 4.5V
PSAV 0V
NORM 5.0V
PSAV 0V
R189
C179
RS5
NORM 5.0V
PSAV
LOCK 5.0V
UNLOCK 0V
MOD
ST AND BY 1.5V
NORM 0V
R182
Q125
D119 R184
D120 R185
R178
12.2V
Q123
11.7V
D113
C167
R164
Q124
R168
C158
C168
R165
R167
D114
R166
R180
W105
LOCK 0V
UNLOCK 5.0V
Q121
VCC
T5
VCC
+5V
PLLE
AF
SP
GND
SCK
SO
STRB
UNLK
RFP
CPO
EXT
CTCS
C177
C150
C151
R191
D112
C153
R162
C155
IC103
C157
R161
C152
Q126
R160
R183
C176
R172
C154
C156
STAND BY 1.0V
NORM 0V
Q127
C160
C161
C162
FUNC SW
LAMP SW
S104
C159
C181
S103
S106
POWER HI/LO

8 - 2 PLL UNIT

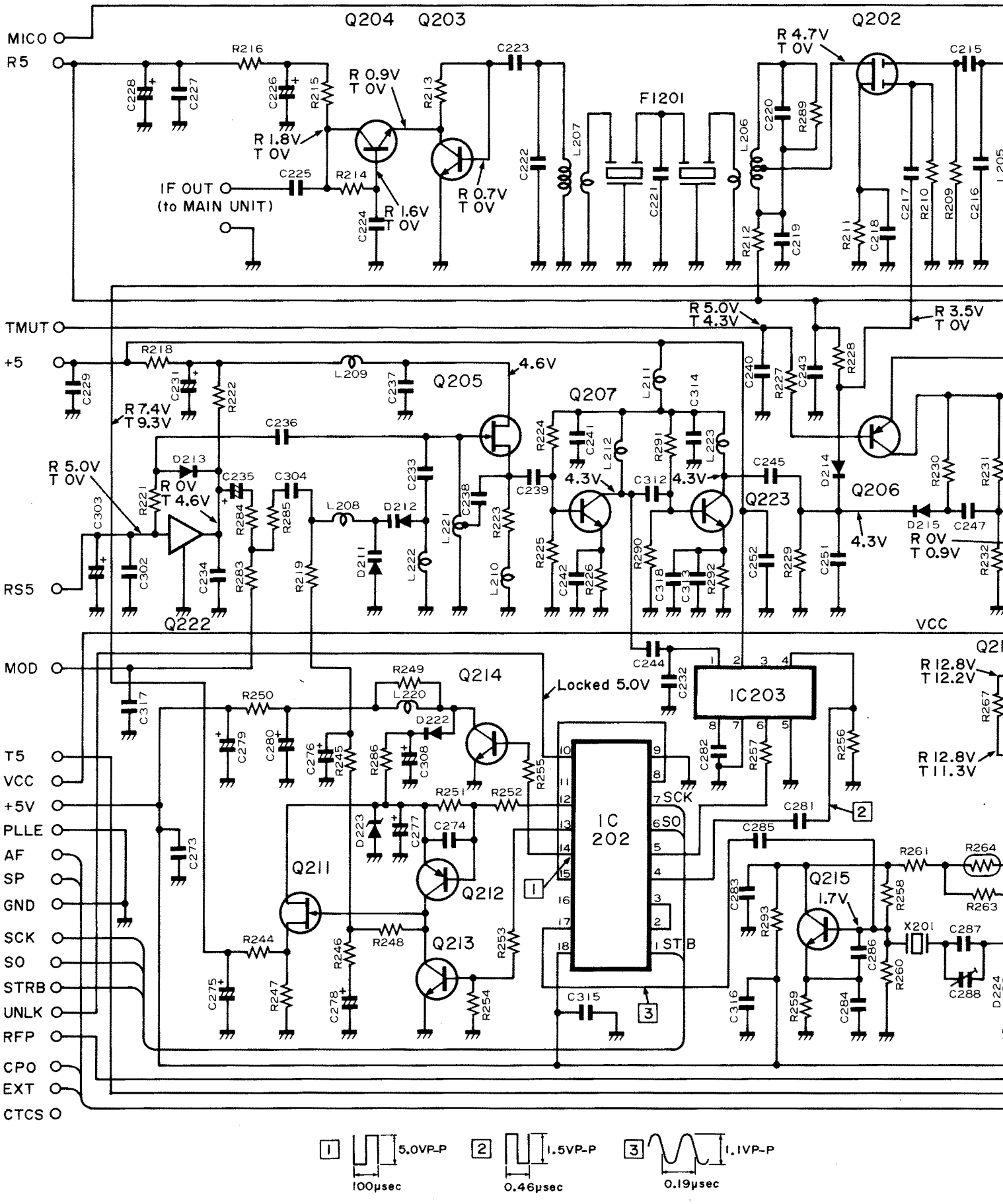
Q204 Q203
Q202
MICO
R5
R 0.9V
T 0V
R 1.8V
T 0V
R 1.6V
T 0V
R 0.7V
T 0V
R 4.7V
T 0V
IF OUT
(to MAIN UNIT)
F1201
TMUT
+5
R 5.0V
T 4.3V
R 3.5V
T 0V
R 7.4V
T 9.3V
4.6V
Q205
Q207
R 5.0V
T 0V
R 0V
T 4.6V
4.3V
Q223
Q206
R 0V
T 0.9V
RS5
Q222
VCC
MOD
Q214
Locked 5.0V
IC203
R 12.8V
T 12.2V
R 12.8V
T 11.3V
T5
VCC
+5V
PLLE
AF
SP
GND
SCK
SO
STRB
UNLK
RFP
CPO
EXT
CTCS
IC 202
SCK
SO
STB
Q211
Q212
Q213
Q215
1.7V
X201
5.0VP-P
100μsec
1.5VP-P
0.46μsec
1.1VP-P
0.19μsec

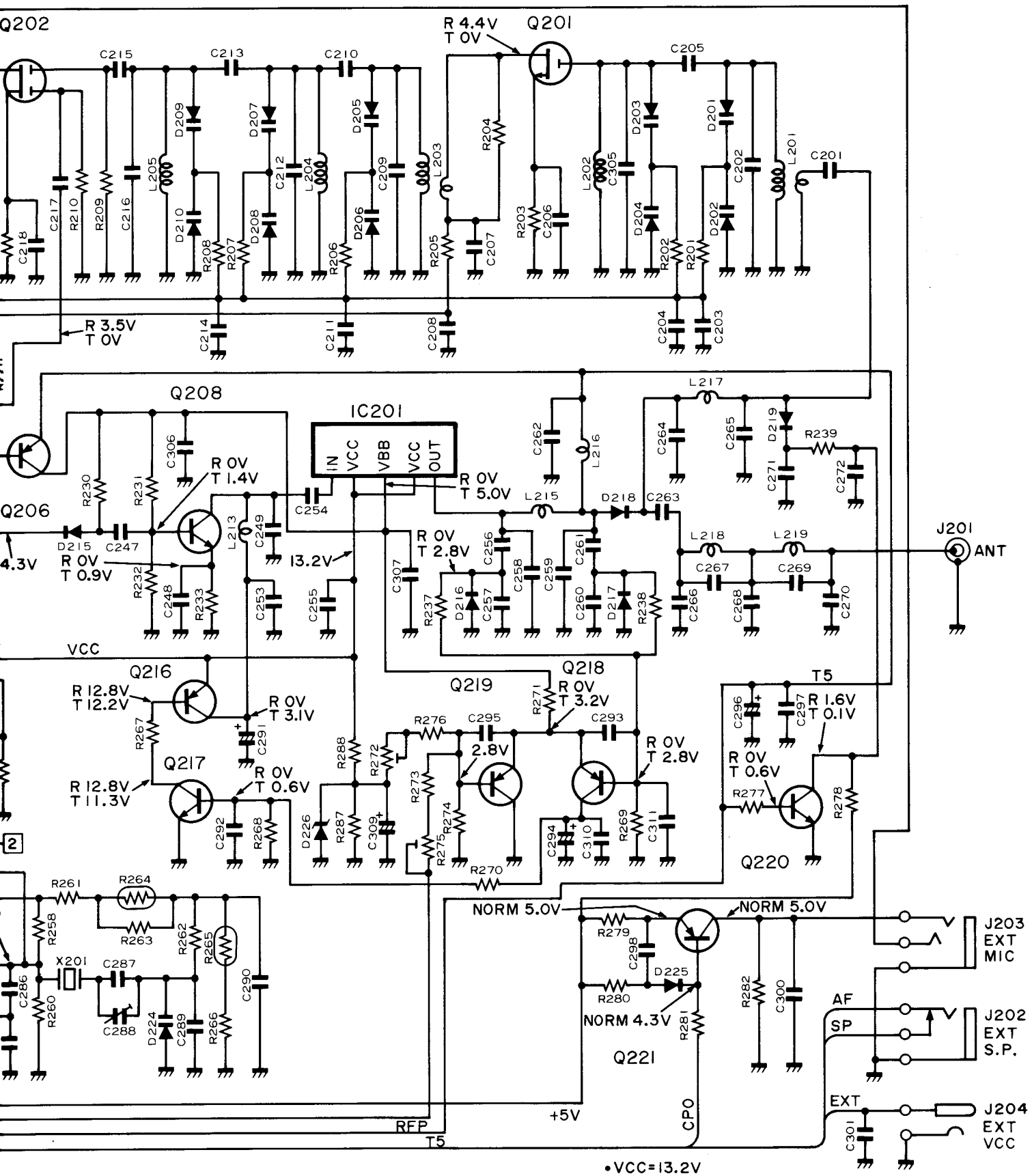
Q202
Q201
R 4.4V
T 0V
Q208
IC201
IN
VCC
VBB
VCC
OUT
R 0V
T 1.4V
R 0V
T 5.0V
R 3.5V
T 0V
Q206
4.3V
R 0V
T 0.9V
13.2V
R 0V
T 2.8V
J201
ANT
VCC
Q216
R 12.8V
T 12.2V
R 0V
T 3.1V
Q217
R 12.8V
T 11.3V
R 0V
T 0.6V
Q219
Q218
R 0V
T 3.2V
2.8V
R 0V
T 2.8V
T5
R 1.6V
T 0.1V
R 0V
T 0.6V
Q220
NORM 5.0V
NORM 5.0V
NORM 4.3V
Q221
J203
EXT
MIC
AF
SP
J202
EXT
S.P.
EXT
J204
EXT
VCC
RFP
T5
+5V
CPO
•VCC=13.2V
•Freqency=160.00MHz
•Power=5W(Hi Power)

8 - 3 LOGIC UNIT VOLTAGE DIAGRAM

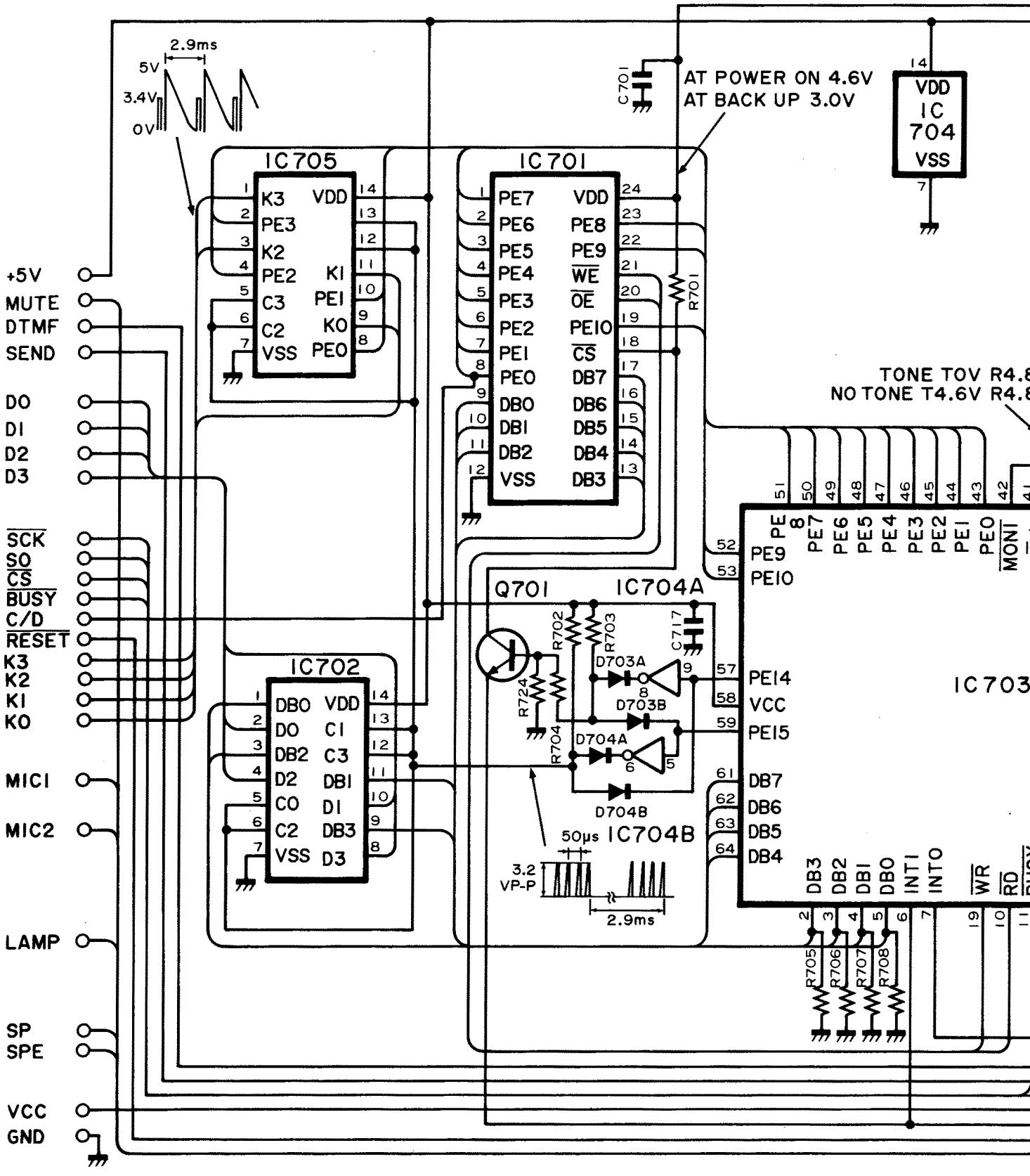

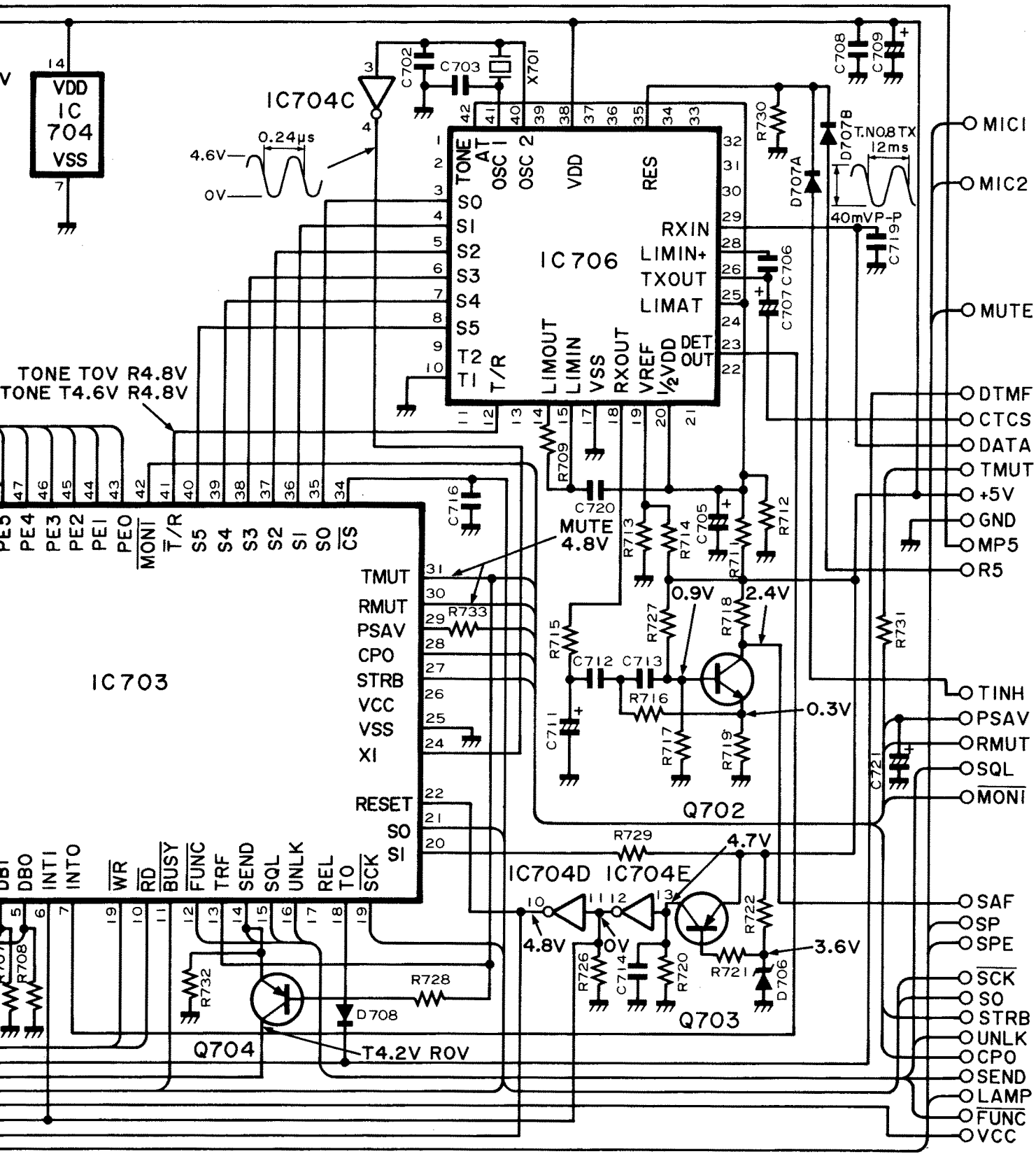
IC704
VDD
VSS
IC704C
0.24μs
4.6V
0V
IC706
TONE
AT
OSC 1
OSC 2
VDD
RES
S0
S1
S2
S3
S4
S5
T2
T1
T/R
RXIN
LIMIN+
TXOUT
LIMAT
LIMOUT
LIMIN
VSS
RXOUT
VREF
½VDD
DET OUT
X701
C702
C703
C708
C709
R730
D707A
D707B
T.NO.8 TX
12ms
40mVP-P
C719
C707 C706
MICI
MIC2
MUTE
DTMF
CTCS
DATA
TMUT
+5V
GND
MP5
R5
TONE T0V R4.8V
TONE T4.6V R4.8V
PE5
PE4
PE3
PE2
PE1
PE0
MONI
T/R
S5
S4
S3
S2
S1
S0
CS
IC703
TMUT
RMUT
PSAV
CPO
STRB
VCC
VSS
XI
RESET
SO
SI
DBI
DBO
INT1
INT0
WR
RD
BUSY
FUNC
TRF
SEND
SQL
UNLK
REL
TO
SCK
R733
R709
C720
C716
MUTE
4.8V
R713
R714
C705
R712
R711
0.9V
2.4V
R727
R718
R715
C712
C713
R716
0.3V
C711
R717
R719
Q702
R731
TINH
PSAV
RMUT
SQL
MONI
C721
R729
4.7V
IC704D
IC704E
4.8V
0V
R722
3.6V
R726
C714
R720
R721
D706
Q703
SAF
SP
SPE
SCK
SO
STRB
UNLK
CPO
SEND
LAMP
FUNC
VCC
R708
R732
R728
D708
Q704
T4.2V R0V

8 - 4 DISPLAY UNIT VOLTAGE DIAGRAM

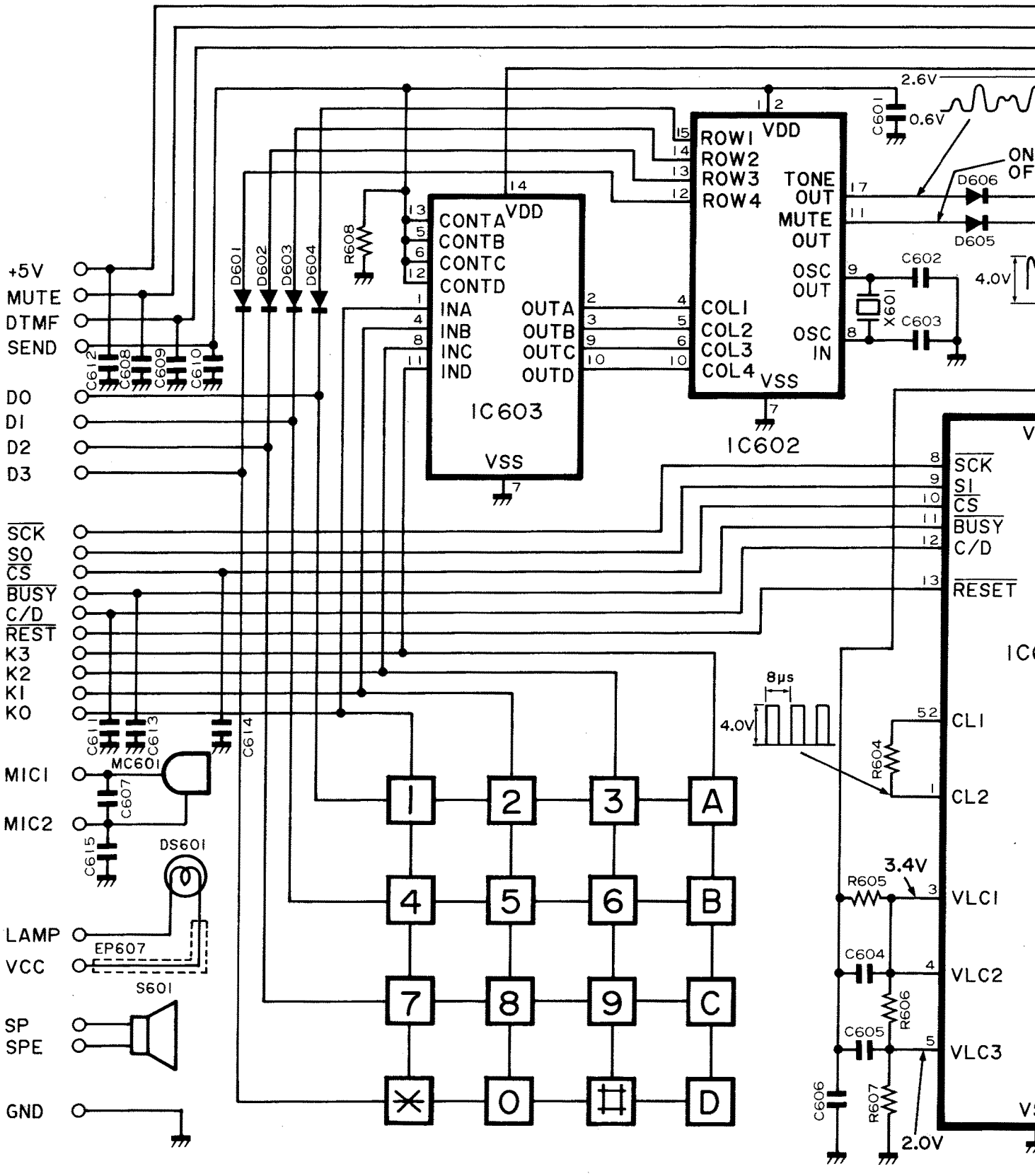

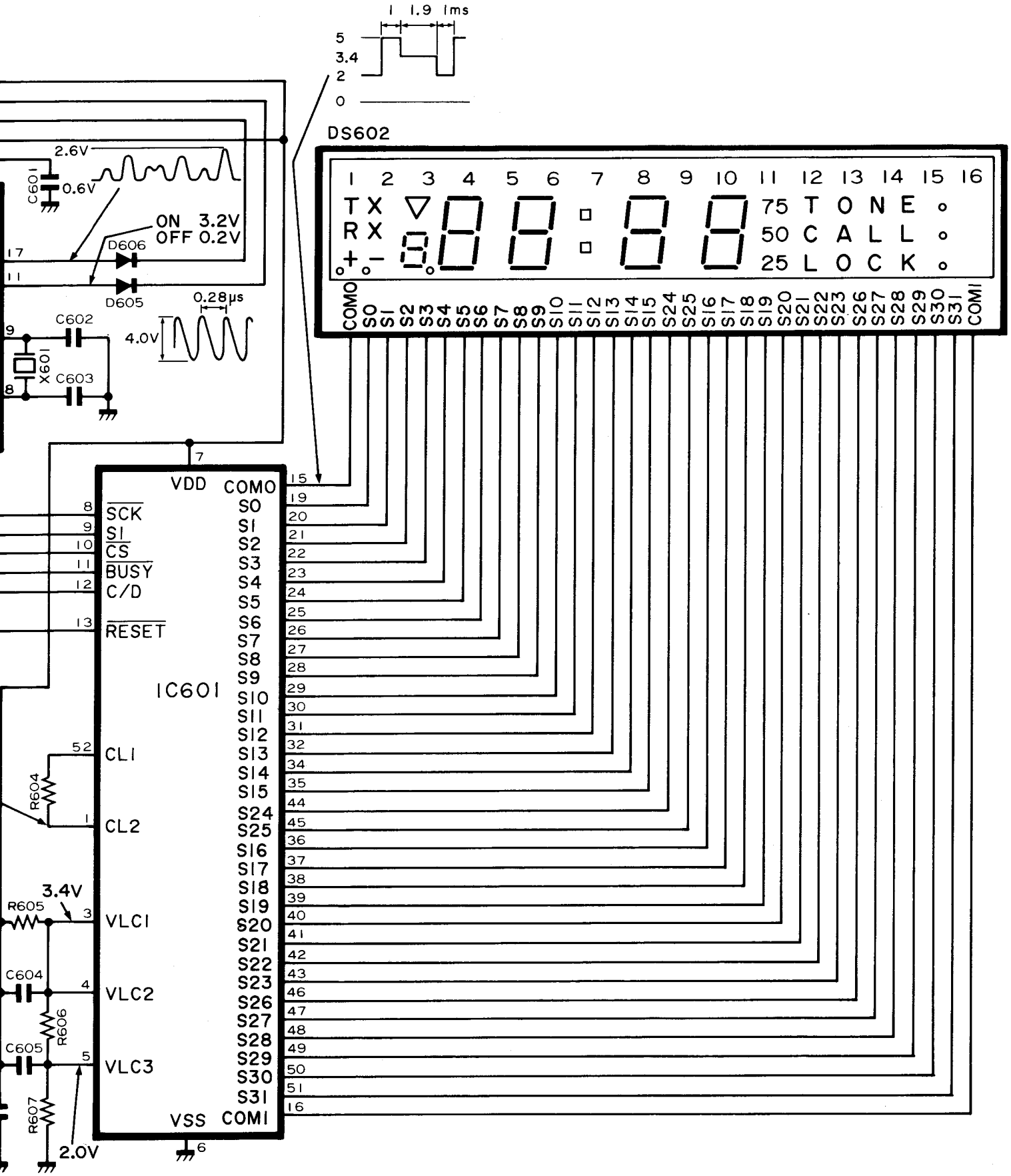
1 1.9 1ms
5
3.4
2
0
DS602
TX
RX
75 TONE
50 CALL
25 LOCK
COM0 S0 S1 S2 S3 S4 S5 S6 S7 S8 S9 S10 S11 S12 S13 S14 S15 S24 S25 S16 S17 S18 S19 S20 S21 S22 S23 S26 S27 S28 S29 S30 S31 COM1
2.6V
0.6V
C601
ON 3.2V
OFF 0.2V
D606
D605
0.28μs
4.0V
C602
C603
X601
VDD
SCK
SI
CS
BUSY
C/D
RESET
IC601
CL1
CL2
VLC1
VLC2
VLC3
VSS
COM0
COM1
R604
R605
R606
R607
C604
C605
3.4V
2.0V

9 - 1 MAIN UNIT

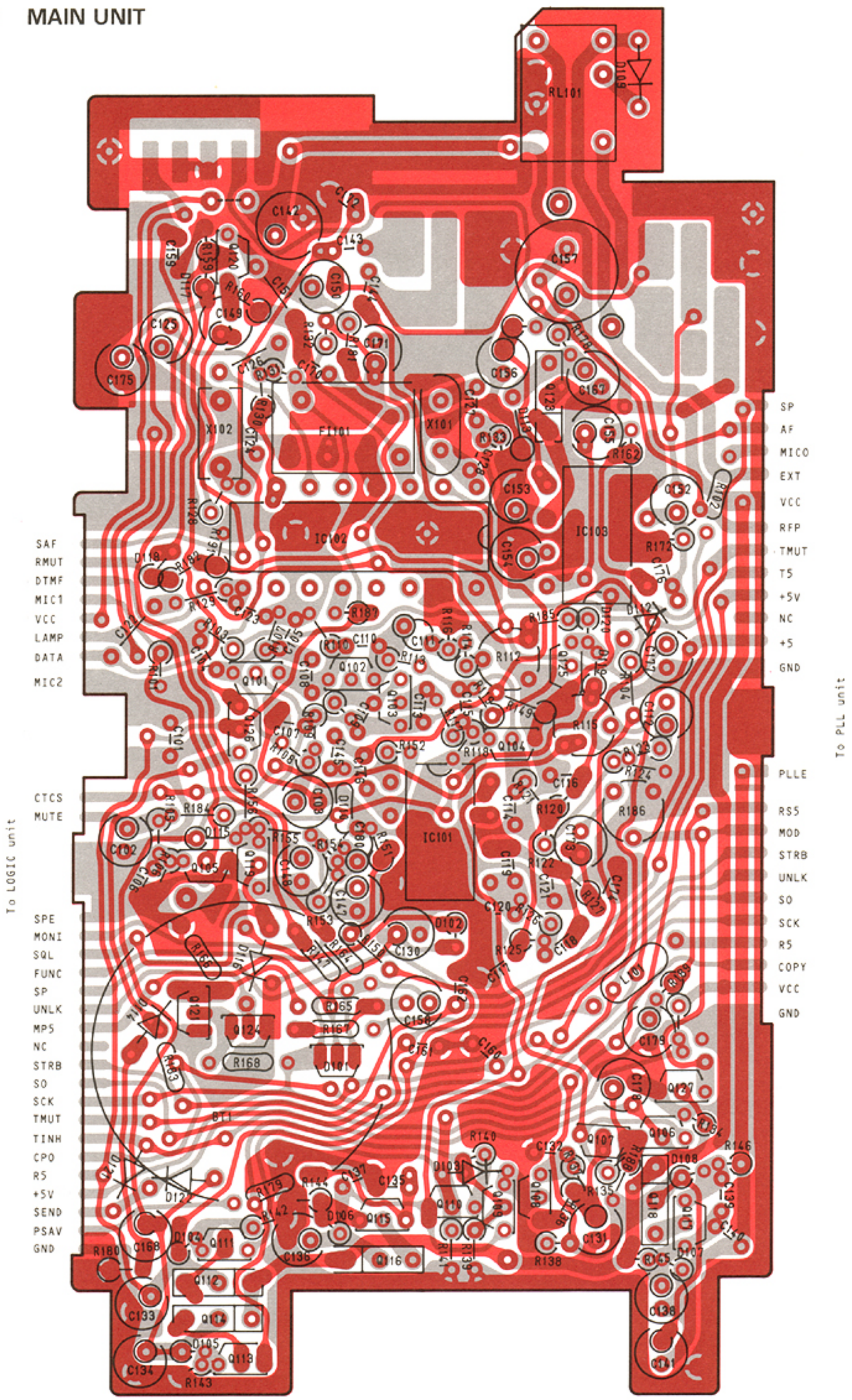
SAF
RMUT
DTMF
MIC1
VCC
LAMP
DATA
MIC2
CTCS
MUTE
SPE
MONI
SQL
FUNC
SP
UNLK
MP5
NC
STRB
SO
SCK
TMUT
TINH
CPO
RS
+5V
SEND
PSAV
GND
To LOGIC unit
SP
AF
MICO
EXT
VCC
RFP
TMUT
T5
+5V
NC
+5
GND
PLLE
RS5
MOD
STRB
UNLK
SO
SCK
R5
COPY
VCC
GND
To PLL unit
RL101
IC101
IC102
IC103
X101
X102
FI101

9 - 2 PLL UNIT

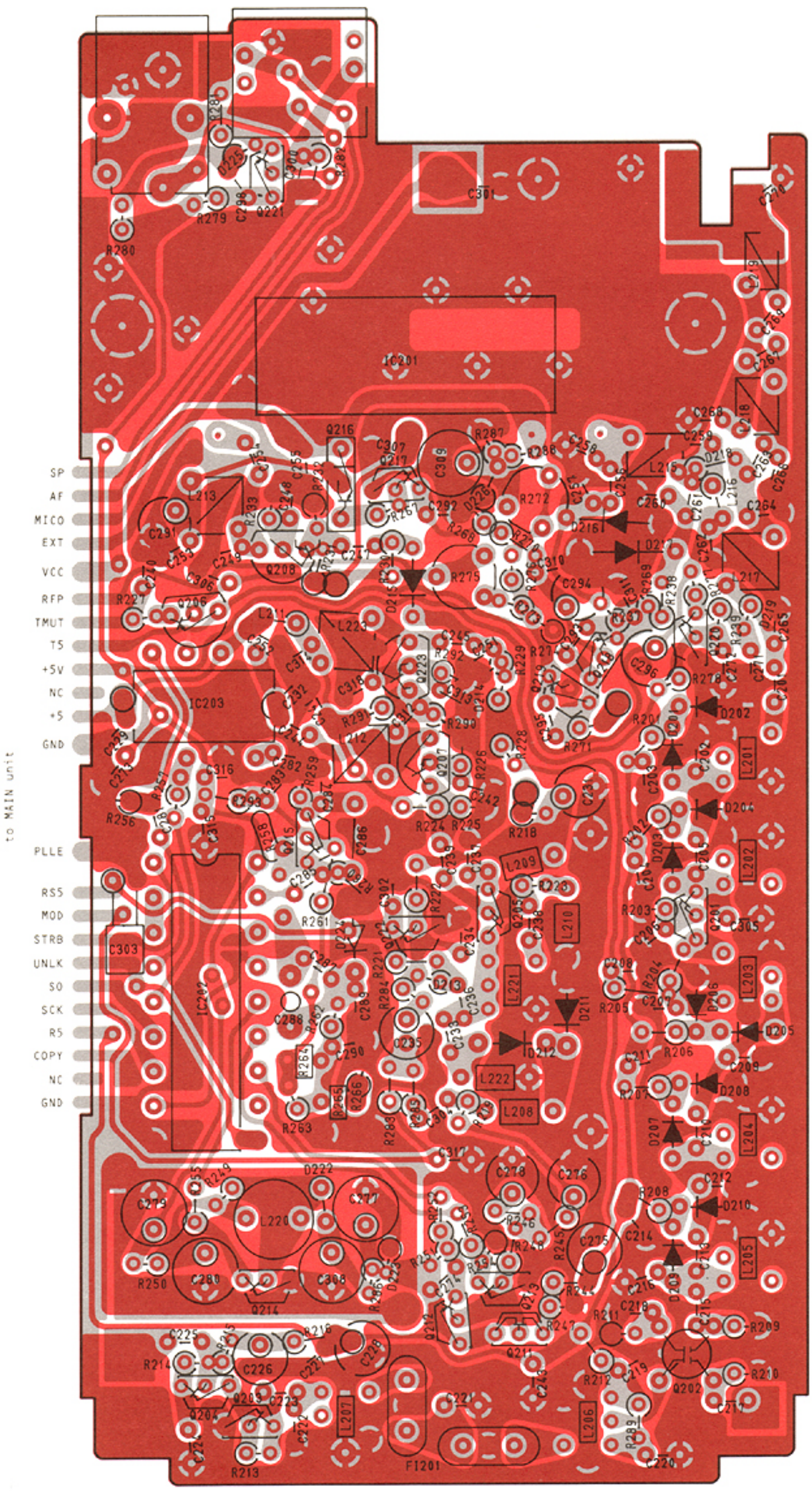
SP
AF
MICO
EXT
VCC
RFP
TMUT
TS
+5V
NC
+5
GND
PLLE
RSS
MOD
STRB
UNLK
SO
SCK
RS
COPY
NC
GND
to MAIN unit
IC201
IC202
IC203
F1201

LOGIC UNIT

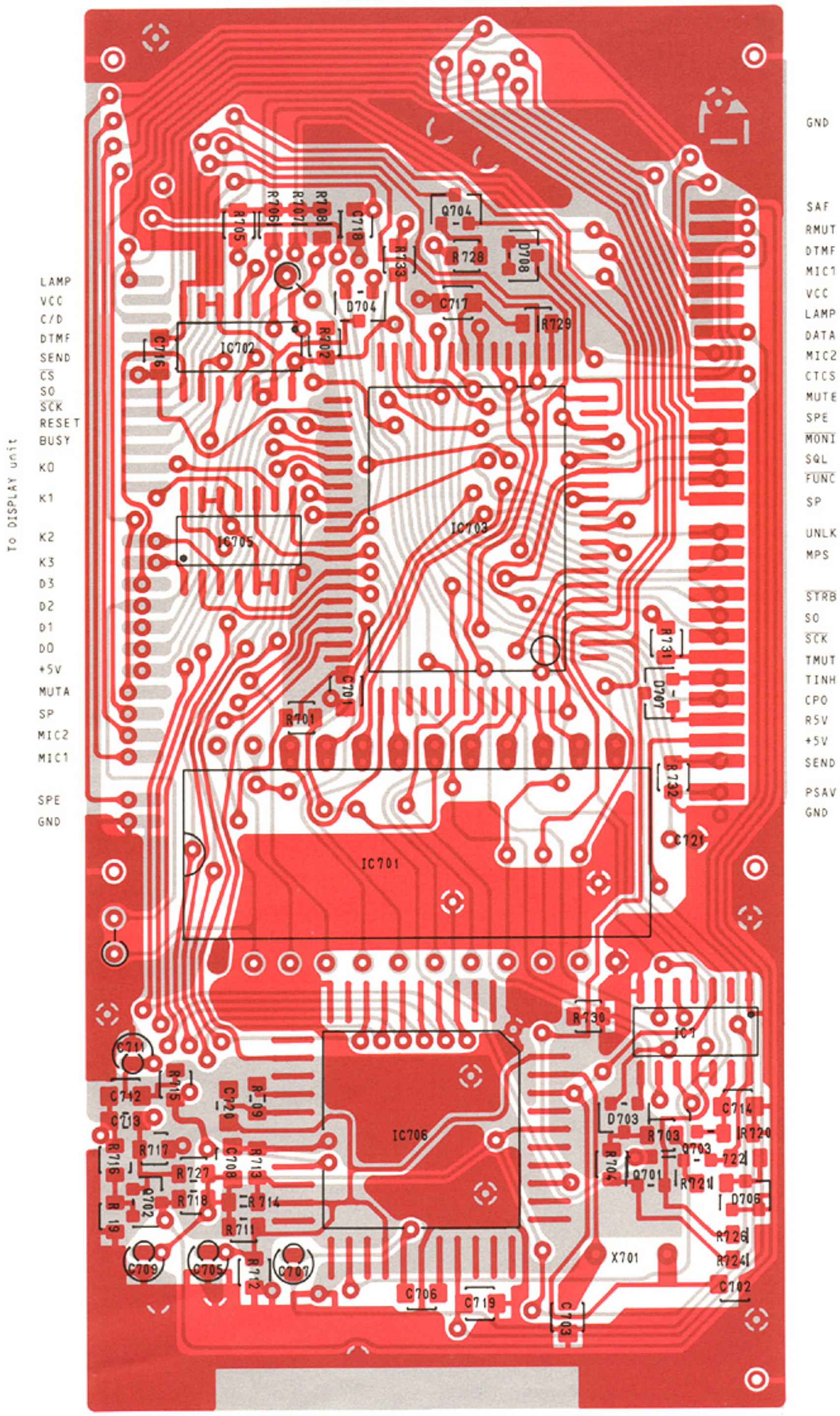
To DISPLAY unit
LAMP
VCC
C/D
DTMF
SEND
CS
SO
SCK
RESET
BUSY
K0
K1
K2
K3
D3
D2
D1
D0
+5V
MUTA
SP
MIC2
MIC1
SPE
GND
GND
SAF
RMUT
DTMF
MIC1
VCC
LAMP
DATA
MIC2
CTCS
MUTE
SPE
MONI
SQL
FUNC
SP
UNLK
MPS
STRB
SO
SCK
TMUT
TINH
CPO
R5V
+5V
SEND
PSAV
GND
IC701
IC702
IC703
IC705
IC706
IC1
X701

9 - 4 DISPLAY UNIT

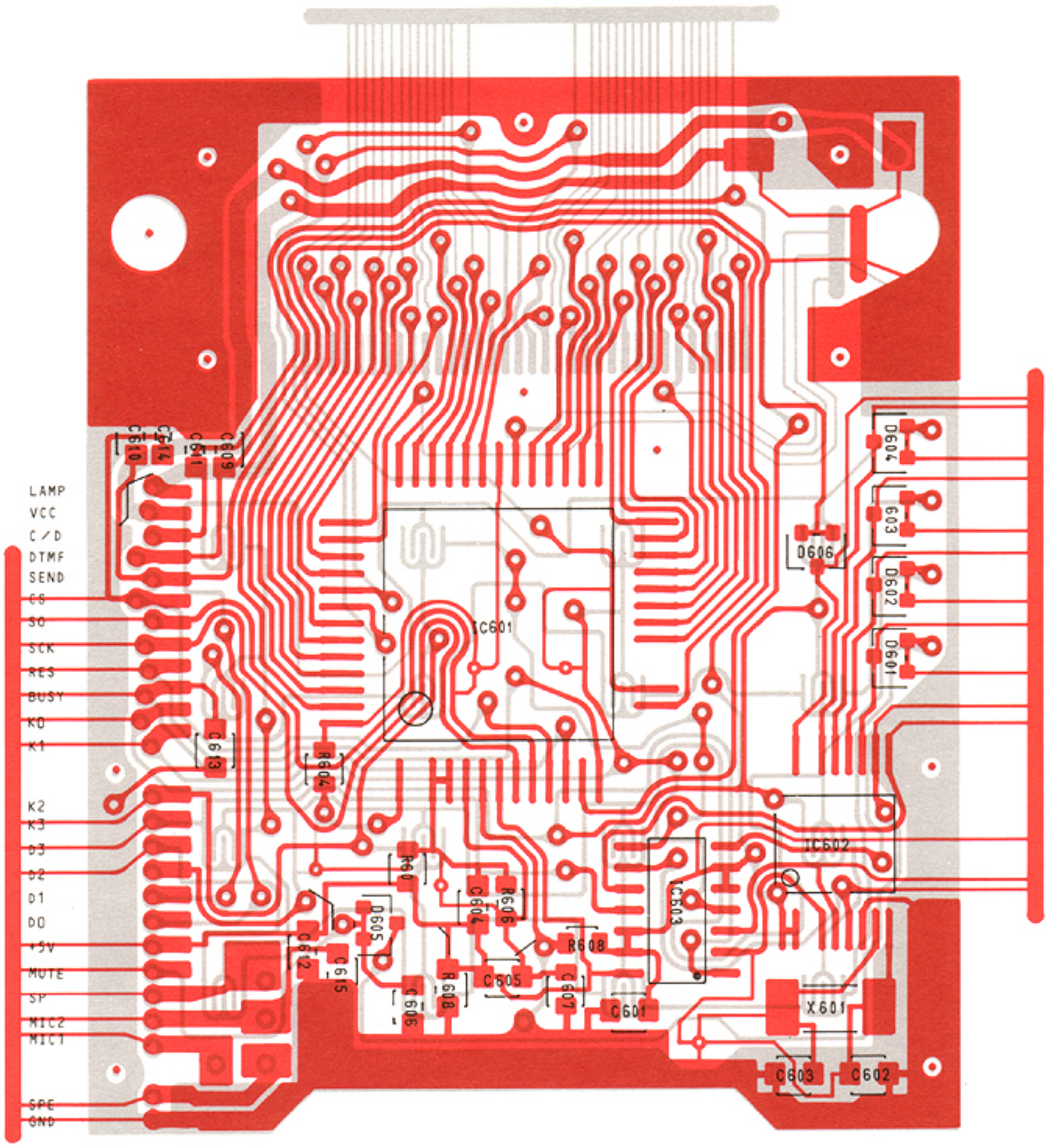

SECTION 10 PARTS LIST

MAIN UNIT

REF. NO.	DESCRIPTION	TYPE (PART NO.)
IC101	IC	μPC358C
IC102	IC	MC3357P
IC103	IC	LM386N-3
Q101	TRANSISTOR	2SC2458 GR
Q102	TRANSISTOR	2SC2458 GR
Q103	TRANSISTOR	2SA1048 GR
Q104	TRANSISTOR	2SC2458 GR
Q105	TRANSISTOR	2SC2458 GR
Q106	TRANSISTOR	2SA1048 GR
Q107	TRANSISTOR	2SA1048 GR
Q108	TRANSISTOR	2SC2458 GR
Q109	TRANSISTOR	2SA1048 GR
Q110	TRANSISTOR	2SA1048 GR
Q111	TRANSISTOR	2SC2458 GR
Q112	TRANSISTOR	2SB909M R
Q113	TRANSISTOR	2SC2458 GR
Q114	TRANSISTOR	2SB909M R
Q115	TRANSISTOR	2SC2458 GR
Q116	TRANSISTOR	2SB909M R
Q117	TRANSISTOR	2SC2458 GR
Q118	TRANSISTOR	2SB909M R
Q119	TRANSISTOR	2SC3399 K
Q120	TRANSISTOR	2SJ105 Y
Q121	TRANSISTOR	2SC2458 GR
Q123	TRANSISTOR	2SD1225M R
Q124	TRANSISTOR	2SC2458 GR
Q125	TRANSISTOR	2SC2458 GR
Q126	TRANSISTOR	2SC2458 GR
Q127	FET	2SJ105 Y
D101	DIODE	1SS233
D102	DIODE	1SS211
D103	DIODE	1SS211
D104	DIODE	1SS211
D105	DIODE	1SS211
D106	DIODE	1SS211
D107	ZENER	RD5.1JS B2
D108	DIODE	1SS211
D109	DIODE	1SS211
D110	DIODE	1SS211
D112	DIODE	1SS211
D113	ZENER	RD12JS B2
D114	DIODE	1SS211
D115	DIODE	1SS211
D116	DIODE	1SS211
D117	DIODE	1SS211
D118	DIODE	1SS211
D119	DIODE	1SS211
D120	DIODE	1SS211
D121	DIODE	1SS211
D122	DIODE	1SS211
FI101	CERAMIC FILTER	CFW455 E (#01, #02)
	CERAMIC FILTER	CFW455 HT (#03)
X101	CRYSTAL	CR-70
X102	DISCRIMINATOR	CDB455 C7A

MAIN UNIT

REF. NO.	DESCRIPTION	TYPE (PART NO.)		
L101	CHOKE	LAL03NA 100K		
R101	RESISTOR	33K	ELR10	
R102	RESISTOR	1K	R10	
R103	RESISTOR	1K	ELR10	
R104	RESISTOR	1.2K	ELR10	
R105	RESISTOR	150K	ELR10	
R106	RESISTOR	100K	ELR10	
R107	RESISTOR	120K	ELR10	
R108	RESISTOR	120K	ELR10	
R109	RESISTOR	470	ELR10	
R110	RESISTOR	12K	ELR10	
R111	RESISTOR	5.6K	ELR10	
R112	TRIMMER	33K	RHM0AN405A	
R113	RESISTOR	330K	ELR10	
R114	RESISTOR	22K	ELR10	
R115	TRIMMER	100K	RHM0A1505A	
R116	RESISTOR	470	ELR10	
R117	RESISTOR	2.2K	ELR10	
R118	RESISTOR	1K	ELR10	
R119	RESISTOR	3.3K	ELR10	
R120	RESISTOR	150K	ELR10	
R121	RESISTOR	220K	ELR10	
R122	RESISTOR	39K	ELR10	
R123	RESISTOR	10K	ELR10	
R124	RESISTOR	33K	ELR10	
R125	RESISTOR	33K	ELR10	
R126	RESISTOR	39K	ELR10	
R127	RESISTOR	12K	ELR10	
R128	RESISTOR	1.5K	ELR10	
R129	RESISTOR	470	ELR10	
R130	RESISTOR	47K	ELR10	
R131	RESISTOR	1.5K	ELR10	(#01, #02)
	RESISTOR	2.2K	ELR10	(#03)
R132	RESISTOR	1.5K	ELR10	(#01, #02)
	RESISTOR	2.2K	ELR10	(#03)
R133	RESISTOR	22K	ELR10	
R134	RESISTOR	47K	ELR10	
R135	RESISTOR	10K	ELR10	
R136	RESISTOR	100K	ELR10	
R137	RESISTOR	220K	ELR10	
R138	RESISTOR	33K	ELR10	
R139	RESISTOR	10K	ELR10	
R140	RESISTOR	180K	ELR10	
R141	RESISTOR	10K	ELR10	
R142	RESISTOR	10K	ELR10	
R143	RESISTOR	10K	ELR10	
R144	RESISTOR	10K	ELR10	
R145	RESISTOR	6.8K	ELR10	
R146	RESISTOR	10K	ELR10	
R147	RESISTOR	100K	R10	
R148	VARIABLE	RK9A1000NA		10KB
R149	RESISTOR	5.6K	ELR10	
R150	RESISTOR	330K	ELR10	
R151	RESISTOR	180K	ELR10	
R152	RESISTOR	1M	ELR10	
R153	RESISTOR	100K	ELR10	
R154	RESISTOR	1K	ELR10	
R155	RESISTOR	150K	ELR10	

MAIN UNIT

REF. NO.	DESCRIPTION	TYPE (PART NO.)		
R156	RESISTOR	680K	ELR10	
R159	RESISTOR	470K	ELR10	
R160	RESISTOR	1M	ELR10	
R161	VARIABLE	RK9A11003A		10KA
R162	RESISTOR	1.8K	ELR10	(#01, #02)
	RESISTOR	2.2K	ELR10	(#03)
R164	RESISTOR	100K	R10	
R165	RESISTOR	33K	R10	
R166	RESISTOR	39K	R10	
R167	RESISTOR	120K	R10	
R168	RESISTOR	470K	R10	
R172	RESISTOR	150K	ELR10	
R178	RESISTOR	220	ELR10	
R179	RESISTOR	1K	R10	
R180	RESISTOR	220K	ELR10	
R181	RESISTOR	27K	ELR10	(#01, #02)
	RESISTOR	68K	ELR10	(#03)
R182	RESISTOR	220K	ELR10	
R183	RESISTOR	47K	R10	
R184	RESISTOR	100K	ELR10	
R185	RESISTOR	33K	ELR10	
R186	TRIMMER	RHM0A1505A		100K
R187	RESISTOR	100K	ELR10	
R188	RESISTOR	470	ELR10	
R189	RESISTOR	10	ELR10	
R191	RESISTOR	150K	ELR10	
C101	CERAMIC	0.001	50V	
C102	ELECTROLYTIC	10	16V	RC3
C103	ELECTROLYTIC	10	16V	RC3
C104	BARRIER LAY	0.01	25V	
C105	CERAMIC	470P	50V	
C106	CERAMIC	470P	50V	
C107	CERAMIC	470P	50V	
C108	CERAMIC	470P	50V	
C109	CERAMIC	470P	50V	
C110	CERAMIC	470P	50V	
C111	TANTALUM	DN1V0R1		
C112	ELECTROLYTIC	0.22	50V	RC3
C113	CERAMIC	470P	50V	
C114	CERAMIC	470P	50V	
C115	CERAMIC	0.001	50V	
C116	CERAMIC	0.001	50V	
C117	MYLAR	0.0022	50V	
C118	MYLAR	0.01	50V	
C119	CERAMIC	470P	50V	
C120	CERAMIC	120P	50V	
C121	CERAMIC	470P	50V	
C122	MYLAR	0.056	50V	
C123	CERAMIC	0.001	50V	
C124	CERAMIC	82P	50V	
C125	ELECTROLYTIC	0.1	50V	RC3
C126	BARRIER LAY	0.1	16V	
C127	CERAMIC	68P	50V	
C128	CERAMIC	120P	50V	
C130	ELECTROLYTIC	47	6.3V	RC3
C131	ELECTROLYTIC	2.2	50V	RC3
C132	CERAMIC	0.001	50V	
C133	ELECTROLYTIC	22	6.3V	RC3
C134	ELECTROLYTIC	22	6.3V	RC3
C135	CERAMIC	470P	50V	
C136	ELECTROLYTIC	22	6.3V	RC3
C137	CERAMIC	0.001	50V	
C138	ELECTROL	22	6.3V	RC3

MAIN UNIT

REF. NO.	DESCRIPTION	TYPE (PART NO.)		
C139	CERAMIC	470P	50V	
C140	CERAMIC	0.001	50V	
C141	ELECTROLYTIC	22	6.3V	RC3
C142	ELECTROLYTIC	47	25V	MS7
C143	CERAMIC	0.001	50V	
C144	CERAMIC	0.001	50V	
C145	CERAMIC	10P	50V	
C146	CERAMIC	0.001	50V	
C147	ELECTROLYTIC	0.22	50V	RC3
C148	ELECTROLYTIC	0.22	50V	RC3
C149	ELECTROLYTIC	1	50V	RC3
C150	ELECTROLYTIC	1	50V	RC3
C151	BARRIER LAY	0.018	25V	
C152	ELECTROLYTIC	0.1	50V	MS5
C153	ELECTROLYTIC	10	16V	MS5
C154	ELECTROLYTIC	10	16V	MS5
C155	ELECTROLYTIC	10	16V	RC3
C156	ELECTROLYTIC	2.2	50V	RC3
C157	ELECTROLYTIC	220	10V	
C158	ELECTROLYTIC	4.7	25V	RC3
C159	CERAMIC	470P	50V	
C160	CERAMIC	47P	50V	
C161	CERAMIC	47P	50V	
C162	CERAMIC	47P	50V	
C163	CERAMIC	0.001	50V	
C164	CERAMIC	0.001	50V	
C167	ELECTROLYTIC	4.7	25V	RC3
C168	ELECTROLYTIC	1	50V	RC3
C170	BARRIER LAY	0.01	25V	
C171	ELECTROLYTIC	10	16V	RC3
C172	CERAMIC	47P	50V	
C173	ELECTROLYTIC	1	50V	RC3
C174	MYLAR	0.0022	50V	
C175	ELECTROLYTIC	0.1	50V	RC3
C176	CERAMIC	470P	50V	
C177	ELECTROLYTIC	2.2	50V	RC3
C178	ELECTROLYTIC	10	16V	RC3
C179	ELECTROLYTIC	2.2	50V	RC3
C180	TANTALUM	DN1V	R47M	
RL101	RELAY	OUC-SS-114D		
S101	SWITCH	SKHHAB062A		
S103	SWITCH	SKHHAB062A		
S104	SWITCH	SKHHAB062A		
S105	SWITCH	SPPH22014A		
S106	SWITCH	SPPH22014A		
BT101	LITHIUM CELL	BR2325-1HC		
EP101	P.C.B.	B-1038D		
EP102	P.C.B.	B-908		
EP103	F.C.B.	B-1045		
EP104	BEADS CORE	DL2-OP2.6-3-1.2H		
EP106	FILTER SEAT	41590		
EP107	INSULATING SEAT(J)			

PLL UNIT

REF. NO.	DESCRIPTION	TYPE (PART NO.)
IC201	IC	SC-1046 (#01, #03)
	IC	SC-1050 (#02)
IC202	IC	μPD2834C
IC203	IC	MB504
Q201	FET	2SK241 GR
Q202	FET	3SK74 M
Q203	TRANSISTOR	2SC2668 O
Q204	TRANSISTOR	2SC2668 O
Q205	FET	2SK192A Y
Q206	TRANSISTOR	2SB561 C
Q207	TRANSISTOR	2SC2026
Q208	TRANSISTOR	2SC2026
Q211	FET	2SK184 Y
Q212	TRANSISTOR	2SA1048 GR
Q213	TRANSISTOR	2SC2458 GR
Q214	TRANSISTOR	2SC3327 B
Q215	TRANSISTOR	2SC2458 GR
Q216	TRANSISTOR	2SB909 M
Q217	TRANSISTOR	2SC2458 GR
Q218	TRANSISTOR	2SA1048 GR
Q219	TRANSISTOR	2SA1048 GR
Q220	TRANSISTOR	2SC2458 GR
Q221	TRANSISTOR	2SA1048 GR
Q222	TRANSISTOR	2SC3399
Q223	TRANSISTOR	2SC2026
D201	VARICAP	1SV153
D202	VARICAP	1SV153
D203	VARICAP	1SV153
D204	VARICAP	1SV153
D205	VARICAP	1SV153
D206	VARICAP	1SV153
D207	VARICAP	1SV153
D208	VARICAP	1SV153
D209	VARICAP	1SV153
D210	VARICAP	1SV153
D211	VARICAP	1SV50E
D212	VARICAP	1SV50E
D213	DIODE	1SS216
D214	DIODE	1SS216
D215	DIODE	1SS216
D216	DIODE	1SS97
D217	DIODE	1SS97
D218	DIODE	1SS216
D219	DIODE	1SS216
D222	DIODE	1SS130
D223	ZENER	RD18J B2
D224	VARICAP	1SV50E
D225	DIODE	1SS211
D226	ZENER	RD5.1JS B2
FI201	MC	21M15B3 (#01, #02)
	MC	21M7B2 (#03)
X201	CRYSTAL	CR-164 (#01, #02)
	CRYSTAL	CR-85 (#03)
L201	COIL	LS-295
L202	COIL	LS-295
L203	COIL	LS-296
L204	COIL	LS-295
L205	COIL	LS-295
L206	COIL	LS-264

PLL UNIT

REF. NO.	DESCRIPTION	TYPE (PART NO.)
L207	COIL	LS-264
L208	CHOKE	LAL02TA 4R7
L209	CHOKE	LAL02TA 4R7
L210	CHOKE	LAL02TA 4R7
L211	CHOKE	LAL03NA 221
L212	COIL	LA-237
L213	COIL	LA-237
L215	COIL	LA-235
L216	CHOKE	LAL03A 4R7
L217	CHOKE	LA-237
L218	CHOKE	LA-235
L219	CHOKE	LA-234
L220	CHOKE	LW-30
L221	COIL	LB-188
L222	CHOKE	LAL02TA 4R7
L223	COIL	LA-237
R201	RESISTOR	150K ELR10
R202	RESISTOR	150K ELR10
R203	RESISTOR	18 ELR10
R204	RESISTOR	6.8K ELR10
R205	RESISTOR	100 ELR10
R206	RESISTOR	150K ELR10
R207	RESISTOR	150K ELR10
R208	RESISTOR	150K ELR10
R209	RESISTOR	220K ELR10
R210	RESISTOR	47K ELR10
R211	RESISTOR	18 ELR10
R212	RESISTOR	68 ELR10
R213	RESISTOR	22K ELR10
R214	RESISTOR	22K ELR10
R215	RESISTOR	3.3K ELR10
R216	RESISTOR	100 ELR10
R218	RESISTOR	100 ELR10
R219	RESISTOR	2.2K ELR10
R221	RESISTOR	8.2K ELR10
R222	RESISTOR	22K ELR10
R223	RESISTOR	100 ELR10
R224	RESISTOR	5.6K ELR10
R225	RESISTOR	4.7K ELR10
R226	RESISTOR	470 ELR10
R227	RESISTOR	6.8K ELR10
R228	RESISTOR	10K ELR10
R229	RESISTOR	22K ELR10
R230	RESISTOR	10K ELR10
R231	RESISTOR	1.2K ELR10
R232	RESISTOR	560 ELR10
R233	RESISTOR	47 ELR10
R237	RESISTOR	4.7K ELR10
R238	RESISTOR	4.7K ELR10
R239	RESISTOR	330 ELR10
R244	RESISTOR	10K ELR10
R245	RESISTOR	22K ELR10
R246	RESISTOR	2.7K ELR10
R247	RESISTOR	120K R10
R248	RESISTOR	1K R10
R249	RESISTOR	10K ELR10
R250	RESISTOR	330 ELR10
R251	RESISTOR	10K ELR10
R252	RESISTOR	100K ELR10
R253	RESISTOR	100K ELR10
R254	RESISTOR	33K ELR10
R255	RESISTOR	10K ELR10
R256	RESISTOR	1K ELR10

PLL UNIT

REF. NO.	DESCRIPTION	TYPE (PART NO.)		
R257	RESISTOR	10K	ELR10	
R258	RESISTOR	120K	R10	
R259	RESISTOR	2.2K	ELR10	
R260	RESISTOR	68K	ELR10	
R261	RESISTOR	6.8K	ELR10	
R262	RESISTOR	10K	ELR10	
R263	RESISTOR	10K	ELR10	
R264	THERMISTOR	33D28		
R265	THERMISTOR	33D28		
R266	RESISTOR	15K	ELR10	
R267	RESISTOR	15K	ELR10	
R268	RESISTOR	560K	ELR10	
R269	RESISTOR	22K	ELR10	
R270	RESISTOR	220K	ELR10	
R271	RESISTOR	82K	ELR10	
R272	TRIMMER	RHM0AJ406A		22K
R273	RESISTOR	2.2K	ELR10	
R274	RESISTOR	22K	ELR10	
R275	TRIMMER	RHM0AJ305A		2.2K
R276	RESISTOR	8.2K	ELR10	
R277	RESISTOR	47K	ELR10	
R278	RESISTOR	1M	ELR10	
R279	RESISTOR	27	ELR10	
R280	RESISTOR	5.6K	ELR10	
R281	RESISTOR	47K	ELR10	
R282	RESISTOR	47K	ELR10	
R283	RESISTOR	10K	ELR10	
R284	RESISTOR	82K	ELR10	
R285	RESISTOR	220K	ELR10	
R286	RESISTOR	100	ELR10	
R287	RESISTOR	6.8K	ELR10	
R288	RESISTOR	6.8K	ELR10	
R289	RESISTOR	8.2K	ELR10	
R290	RESISTOR	4.7K	ELR10	
R291	RESISTOR	5.6K	ELR10	
R292	RESISTOR	470	ELR10	
R293	RESISTOR	100	ELR10	
C201	CERAMIC	0.001	50V	
C202	CERAMIC	3P	50V	
C203	CERAMIC	0.001	50V	
C204	CERAMIC	0.001	50V	
C205	CERAMIC	0.5P	50V	(#01, #03)
	CERAMIC	1P	50V	(#02)
C206	CERAMIC	0.001	50V	
C207	CERAMIC	0.001	50V	
C208	CERAMIC	0.001	50V	
C209	CERAMIC	2P	50V	
C210	CERAMIC	0.5P	50V	(#01, #03)
	CERAMIC	1P	50V	(#02)
C211	CERAMIC	0.001	50V	
C212	CERAMIC	2P	50V	
C213	CERAMIC	0.5P	50V	(#01, #03)
	CERAMIC	1P	50V	(#02)
C214	CERAMIC	0.001	50V	
C215	CERAMIC	6P	50V	
C216	CERAMIC	1P	50V	
C217	CERAMIC	22P	50V	
C218	CERAMIC	0.001	50V	
C219	CERAMIC	0.001	50V	
C220	CERAMIC	47P	50V	
C221	CERAMIC	5P	50V	(#01, #02)
	CERAMIC	15P	50V	(#03)
C222	CERAMIC	47P	50V	

PLL UNIT

REF. NO.	DESCRIPTION	TYPE (PART NO.)		
C223	CERAMIC	4P	50V	
C224	BARRIER LAY	0.0047	25V	
C225	CERAMIC	0.001	50V	
C226	ELECTROLYTIC	1	50V	RC2
C227	BARRIER LAY	0.0047	25V	
C228	ELECTROLYTIC	10	16V	RC2
C229	CERAMIC	0.001	50V	
C231	ELECTROLYTIC	47	6.3V	RC2
C232	CERAMIC	10P	50V	
C233	CERAMIC	470P	50V	
C234	CERAMIC	0.001	50V	
C235	ELECTROLYTIC	10	16V	RC3
C236	CERAMIC	5P	50V	
C237	CERAMIC	0.001	50V	
C238	CERAMIC	0.001	50V	
C239	CERAMIC	1P	50V	
C240	CERAMIC	0.001	50V	
C241	CERAMIC	0.001	50V	
C242	CERAMIC	0.001	50V	
C243	CERAMIC	470P	50V	
C244	CERAMIC	10P	50V	
C245	CERAMIC	22P	50V	
C247	CERAMIC	4P	50V	
C248	CERAMIC	0.001	50V	
C249	CERAMIC	10P	50V	
C251	CERAMIC	4P	50V	
C252	CERAMIC	RPE121C104M50		0.1
C253	CERAMIC	0.001	50V	
C254	CERAMIC	10P	50V	
C255	CERAMIC	0.001	50V	
C256	BARRIER LAY	0.75	50V	
C257	CERAMIC	2P	50V	
C258	CERAMIC	10P	50V	
C259	CERAMIC	10P	50V	
C260	CERAMIC	2P	50V	
C261	BARRIER LAY	0.75	50V	
C262	CERAMIC	470P	50V	
C263	CERAMIC	0.001	50V	
C264	CERAMIC	15P	50V	
C265	CERAMIC	15P	50V	
C266	CERAMIC	15P	50V	
C267	CERAMIC	2P	50V	
C268	CERAMIC	27P	50V	
C269	CERAMIC	8P	50V	
C270	CERAMIC	12P	50V	
C271	CERAMIC	120P	50V	
C272	CERAMIC	470P	50V	
C273	CERAMIC	0.001	50V	
C274	CERAMIC	100P	50V	
C275	ELECTROLYTIC	0.1	50V	RC2
C276	TANTALUM	DN1V0R1M		
C277	ELECTROLYTIC	10	35V	RC2
C278	TANTALUM	DN1V	2R2M	
C279	ELECTROLYTIC	47	6.3V	RC2
C280	ELECTROLYTIC	47	6.3V	RC2
C281	CERAMIC	0.001	50V	
C282	CERAMIC	0.001	50V	
C283	BARRIER LAY	0.01	25V	
C284	CERAMIC	100P	50V	
C285	CERAMIC	0.001	50V	
C286	CERAMIC	220P	50V	
C287	CERAMIC	33P	50V	CH
C288	TRIMMER	ECRGA020E30		20P
C289	CERAMIC	4P	50V	CH

PLL UNIT

REF. NO.	DESCRIPTION	TYPE (PART NO.)		
C290	CERAMIC	0.001	50V	
C291	TANTALUM	DN1C	4R7M	
C292	CERAMIC	0.001	50V	
C293	CERAMIC	0.001	50V	
C294	TANTALUM	DN1C	4R7M	
C295	CERAMIC	0.001	50V	
C296	ELECTROLYTIC	10	16V	RC2
C298	CERAMIC	470P	50V	
C300	CERAMIC	470P	50V	
C301	CERAMIC	0.001	50V	
C302	CERAMIC	0.001	50V	
C303	ELECTROLYTIC	2.2	50V	RC2
C304	BARRIER LAY	150P	50V	
C305	CERAMIC	0.5P	50V	
C306	CERAMIC	0.001	50V	
C307	CERAMIC	0.001	50V	
C308	ELECTROLYTIC	10	35V	RC2
C309	ELECTROLYTIC	47	6.3V	RC2
C310	CERAMIC	0.001	50V	
C311	CERAMIC	0.001	50V	
C312	CERAMIC	5P	50V	
C313	CERAMIC	0.001	50V	
C314	CERAMIC	0.001	50V	
C315	CERAMIC	0.001	50V	
C316	CERAMIC	RPE121C104M50		0.1
C317	CERAMIC	0.001	50V	
C318	CERAMIC	470P	50V	
J201	CONNECTOR	HSJ-0836-01-010		
J202	CONNECTOR	TNC102-N1-W1-L1		
J203	CONNECTOR	HSJ-1102-01-040		
J204	CONNECTOR	HEC-0747-01-010		
J205	CONNECTOR	171255-1		
J206	CONNECTOR	171255-1		
EP201	P.C.B.	B-1146B		
EP207	FILTER SEAT	41590		
EP212	ALUMINIUM SEAT	42356		
EP213	SHIELDING PLATE	41911		
EP214	F.P.C.	B-1050		
EP215	F.P.C.	B-1044		
EP217	GROUND SPRING	41595		
W205	JUMPER	JPW-02A		

DISPLAY UNIT

REF. NO.	DESCRIPTION	TYPE (PART NO.)
IC601	IC	μPD7225G
IC602	IC	LR40872
IC603	IC	μPD4066BG
D601	DIODE	1SS190
D602	DIODE	1SS190
D603	DIODE	1SS190
D604	DIODE	1SS190
D605	DIODE	1SS190
D606	DIODE	1SS190
X601	CERALOCK	CSAC3.58MG

DISPLAY UNIT

REF. NO.	DESCRIPTION	TYPE (PART NO.)	
R604	CHIP	180K	MCR10
R605	CHIP	15K	MCR10
R606	CHIP	15K	MCR10
R607	CHIP	22K	MCR10
R608	CHIP	47K	MCR10
C601	MONOLITHIC	0.001	GRM40
C602	MONOLITHIC	30P	GRM40
C603	MONOLITHIC	30P	GRM40
C604	MONOLITHIC	0.001	GRM40
C605	MONOLITHIC	0.001	GRM40
C606	MONOLITHIC	0.001	GRM40
C607	CERAMIC	470P	50V
C608	MONOLITHIC	0.001	GRM40
C609	MONOLITHIC	0.001	GRM40
C610	MONOLITHIC	0.001	GRM40
C611	MONOLITHIC	47P	GRM40
C612	MONOLITHIC	0.001	GRM40
C613	MONOLITHIC	47P	GRM40
C614	MONOLITHIC	47P	GRM40
C615	MONOLITHIC	470P	GRM40
DS601	LAMP	BQ031-22403A	
DS602	LCD	LP217A-E	
EP603	P.C.B.	B-1049C	
EP604	F.P.C.	B-1046A	

LOGIC UNIT

REF. NO.	DESCRIPTION	TYPE (PART NO.)	
IC701	IC	μPD446C	
IC702	IC	μPD4066BG	
IC703	IC	μPD78C06A	
IC704	IC	μPD4069UBG	
IC705	IC	μPD4066BG	
IC706	IC	MN6520	
Q701	TRANSISTOR	2SC2712 Y	
Q702	TRANSISTOR	2SC2712 Y	
Q703	TRANSISTOR	2SA1162 Y	
Q704	TRANSISTOR	2SA1162 Y	
D703	DIODE	1SS181	
D704	DIODE	1SS181	
D706	ZENER	RD5.1M B2	
D707	DIODE	1SS184	
D708	DIODE	1SS181	
D709	DIODE	1S953	
X701	CRYSTAL	RF-4A3FACNHD	
R701	CHIP	47K	MCR10
R702	CHIP	47K	MCR10
R703	CHIP	47K	MCR10
R704	CHIP	47K	MCR10
R705	CHIP	47K	MCR10
R706	CHIP	47K	MCR10
R707	CHIP	47K	MCR10
R708	CHIP	47K	MCR10
R709	CHIP	820K	MCR10
R711	CHIP	10K	MCR10

LOGIC UNIT

REF. NO.	DESCRIPTION	TYPE (PART NO.)	
R712	CHIP	10K	MCR10
R713	CHIP	10K	MCR10
R714	CHIP	15K	MCR10
R715	CHIP	10K	MCR10
R716	CHIP	4.7K	MCR10
R717	CHIP	470K	MCR10
R718	CHIP	6.8K	MCR10
R719	CHIP	820	MCR10
R720	CHIP	47K	MCR10
R721	CHIP	68K	MCR10
R722	CHIP	15K	MCR10
R724	CHIP	1M	MCR10
R726	CHIP	100K	MCR10
R727	CHIP	1M	MCR10
R728	CHIP	220K	MCR10
R729	CHIP	470K	MCR10
R730	CHIP	47K	MCR10
R731	CHIP	1K	MCR10
R732	CHIP	47K	MCR10
R733	RESISTOR	0	MCR10
C701	MONOLITHIC	0.1	GRM40 F

LOGIC UNIT

REF. NO.	DESCRIPTION	TYPE (PART NO.)	
C702	MONOLITHIC	5P	GRM40
C703	MONOLITHIC	18P	GRM40
C705	ELECTROLYTIC	22	6.3V RC3
C706	MONOLITHIC	0.1	GRM40 F
C707	ELECTROLYTIC	1	50V RC3
C708	MONOLITHIC	0.01	GRM40 F
C709	ELECTROLYTIC	22	16V RC3
C711	ELECTROLYTIC	0.1	50V RC3
C712	MONOLITHIC	0.1	GRM40 F
C713	MONOLITHIC	0.01	GRM40 F
C714	MONOLITHIC	0.01	GRM40 F
C716	MONOLITHIC	47P	GRM40
C717	MONOLITHIC	0.01	GRM40 F
C718	MONOLITHIC	0.001	GRM40
C719	MONOLITHIC	0.01	GRM40 F
C720	MONOLITHIC	0.1	GRM40 F
C722	TANTALUM	3.3	16V
EP702	P.C.B.	B-1048D	
EP703	SHIELDING PLATE(C)		40639

SECTION 11 IC SPECIFICATIONS

μPD78C06A (MPU)

MAXIMUM RATINGS (Ta = 25°C)

DESCRIPTION	SYMBOL	RATINGS	UNIT
Supply Voltage	V_{CC}	−0.3~7.0	V
Input And Output Voltage	V_T	−0.3~V_{CC}+0.3	V
Output Current (High level)	I_{OH}	−5	mA
Output Current (Low level)	I_{OL}	43.5	mA
Operating Temperature	T_{OPR}	−40~85	°C
Storage Temperature	T_{STG}	−65~150	°C

PIN CONNECTION

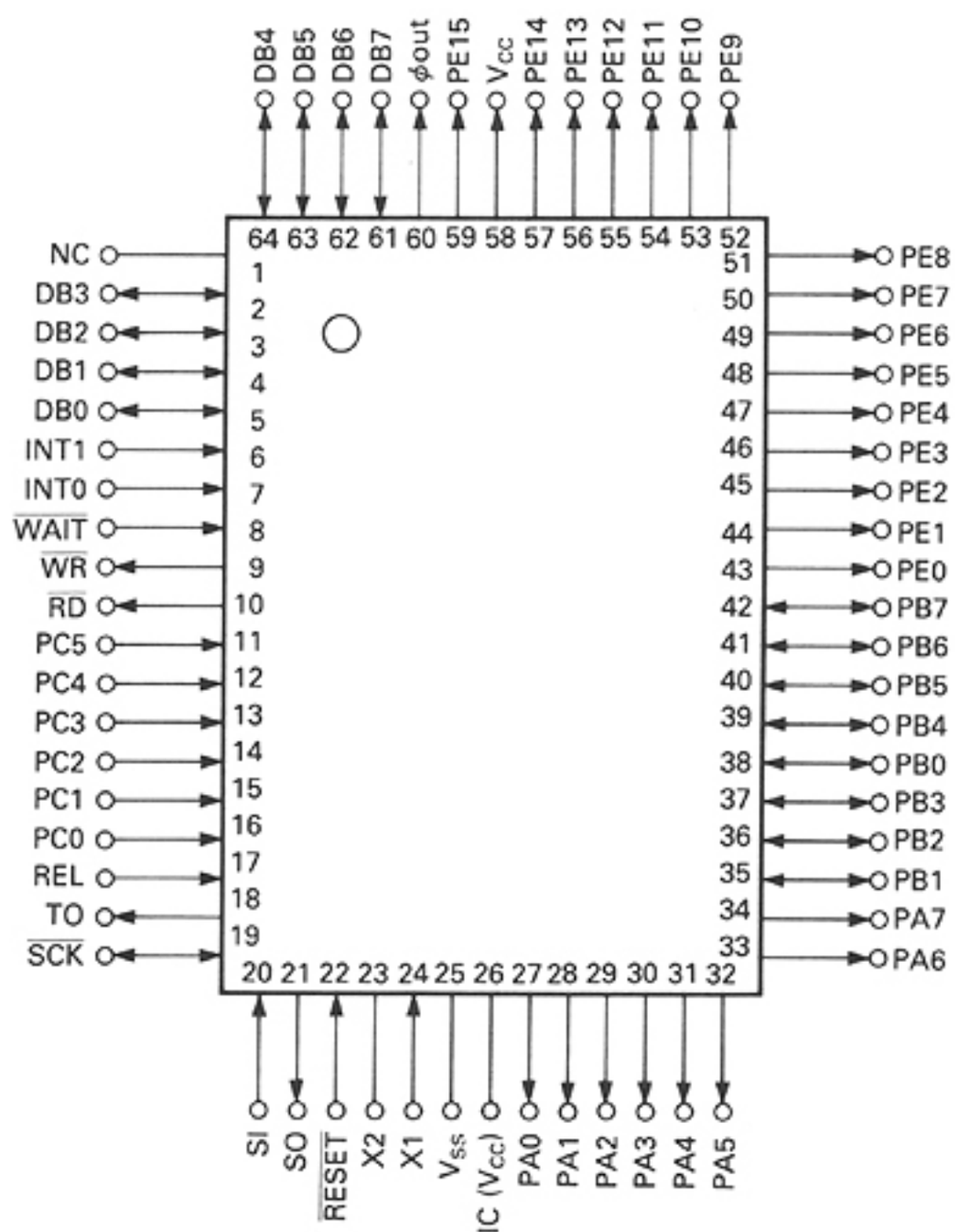

μPD446 (16384 BIT STATIC CMOS RAM)

MAXIMUM RATINGS (Ta = 25°C)

DESCRIPTION	SYMBOL	RATINGS	UNIT
Supply Voltage	V_{CC}	7.0	V
Input And Output Voltage	V_T	−0.3~V_{CC}+0.3	V
Operating Temperature	T_{OPR}	−40~85	°C
Storage Temperature	T_{STG}	−55~125	°C

PIN CONNECTION

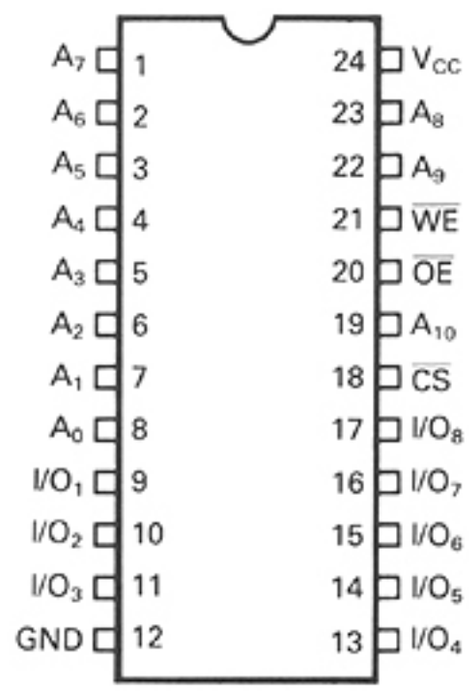

BLOCK DIAGRAM

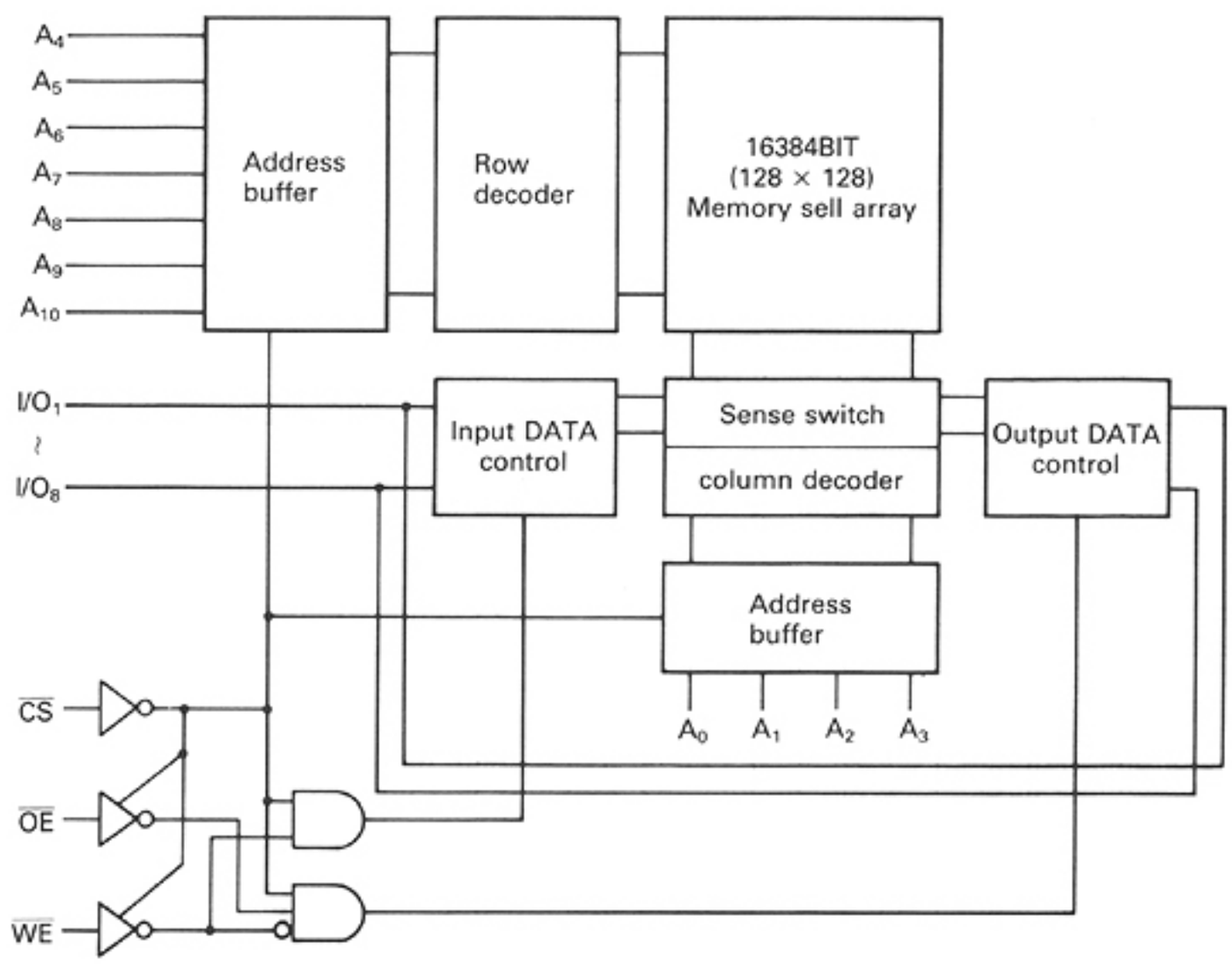

μPD2834C (PLL FREQUENCY SYNTHESIZER)

MAXIMUM RATINGS (Ta = 25°C)

DESCRIPTION	SYMBOL	RATINGS	UNIT	REMARKS
Supply Voltage	V_{DD}	−0.3~+7.0	V	
Input Voltage	V_{IN}	−0.5~+V_{DD}+0.5	V	
Output Voltage	V_{OUT}	−0.5~+V_{DD}+0.5	V	
Output Voltage	V_{OUT}	−0.5~+V_{DD}+3.0	V	EOU pins only
Operating Temperature	T_{OPR}	−40~+85	°C	
Storage Temperature	T_{STR}	−65~+150	°C	

PIN CONNECTION

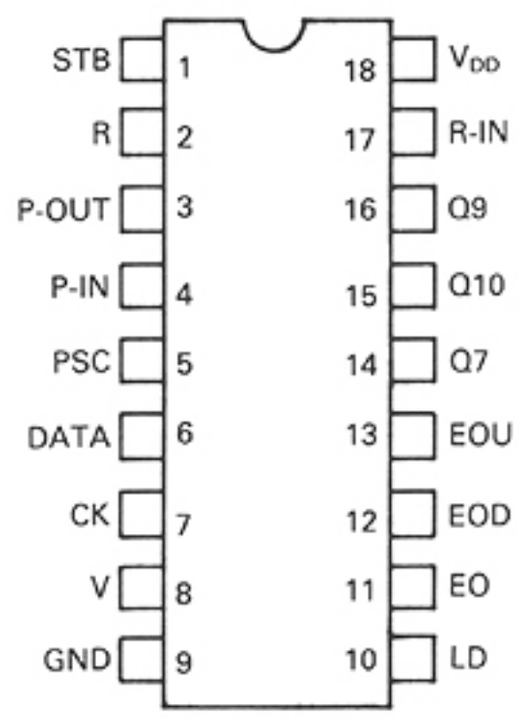

BLOCK DIAGRAM

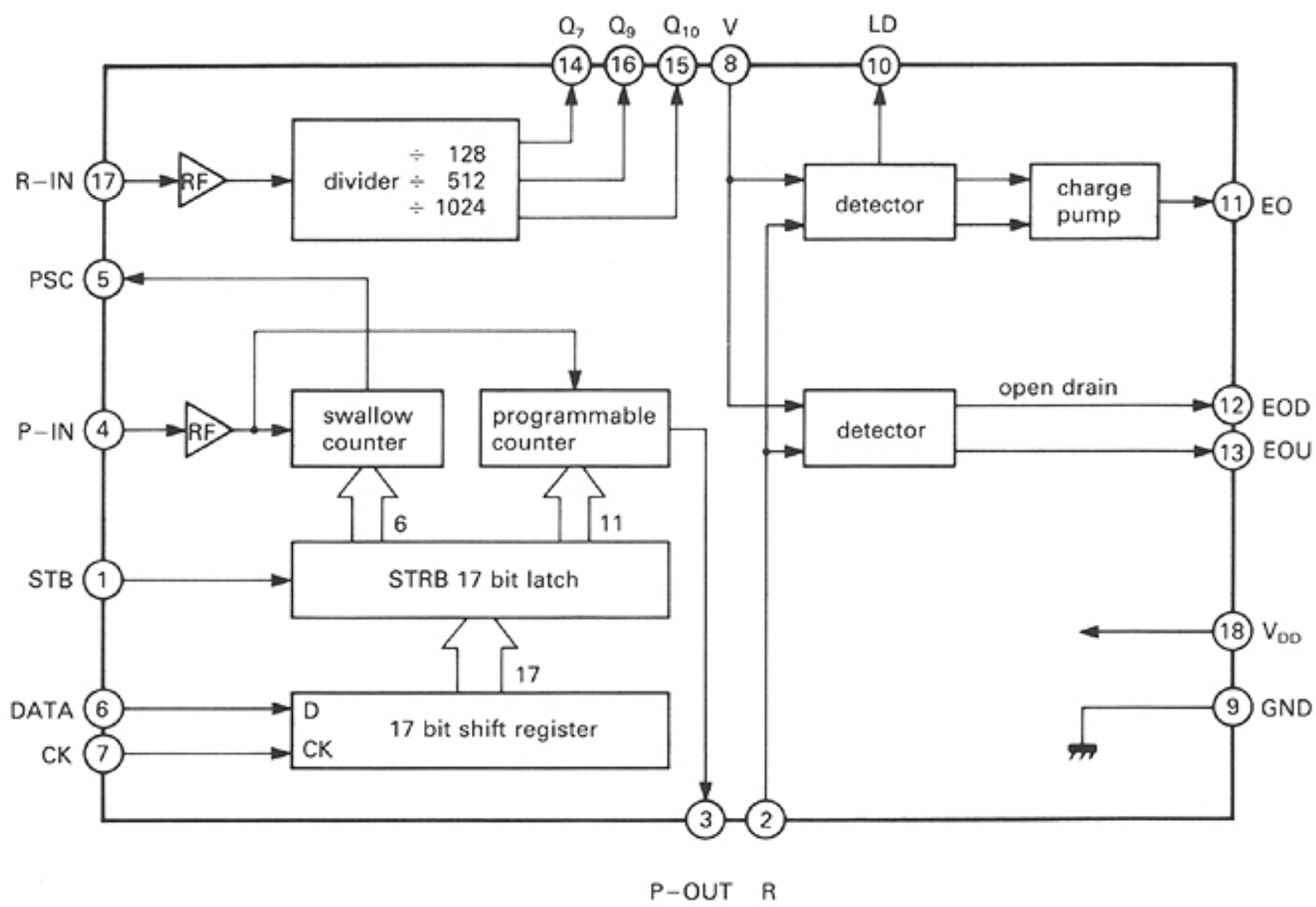

MB504 (HIGH SPEED PRESCALER)

MAXIMUM RATINGS (ta = 25°C)

DESCRIPTION	SYMBOL	RATINGS	UNIT
Supply Voltage	V_{CC}	4.5~5.5	V
Input Voltage	V_{IN}	0.15~2.0	$V_{P\text{-}P}$
Output Current	Io	1.2	mA
Operating Temperature	T_{OPR}	−40~85	°C

PIN CONNECTION

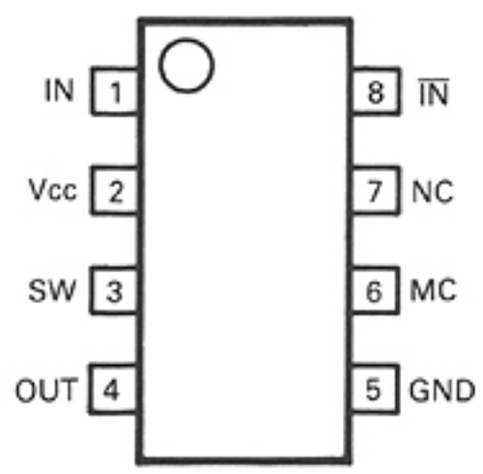

DIVIDE RATIO

SW	MC	Divide Ratio
H	H	1/32
H	L	1/33
L	H	1/64
L	L	1/65

BLOCK DIAGRAM

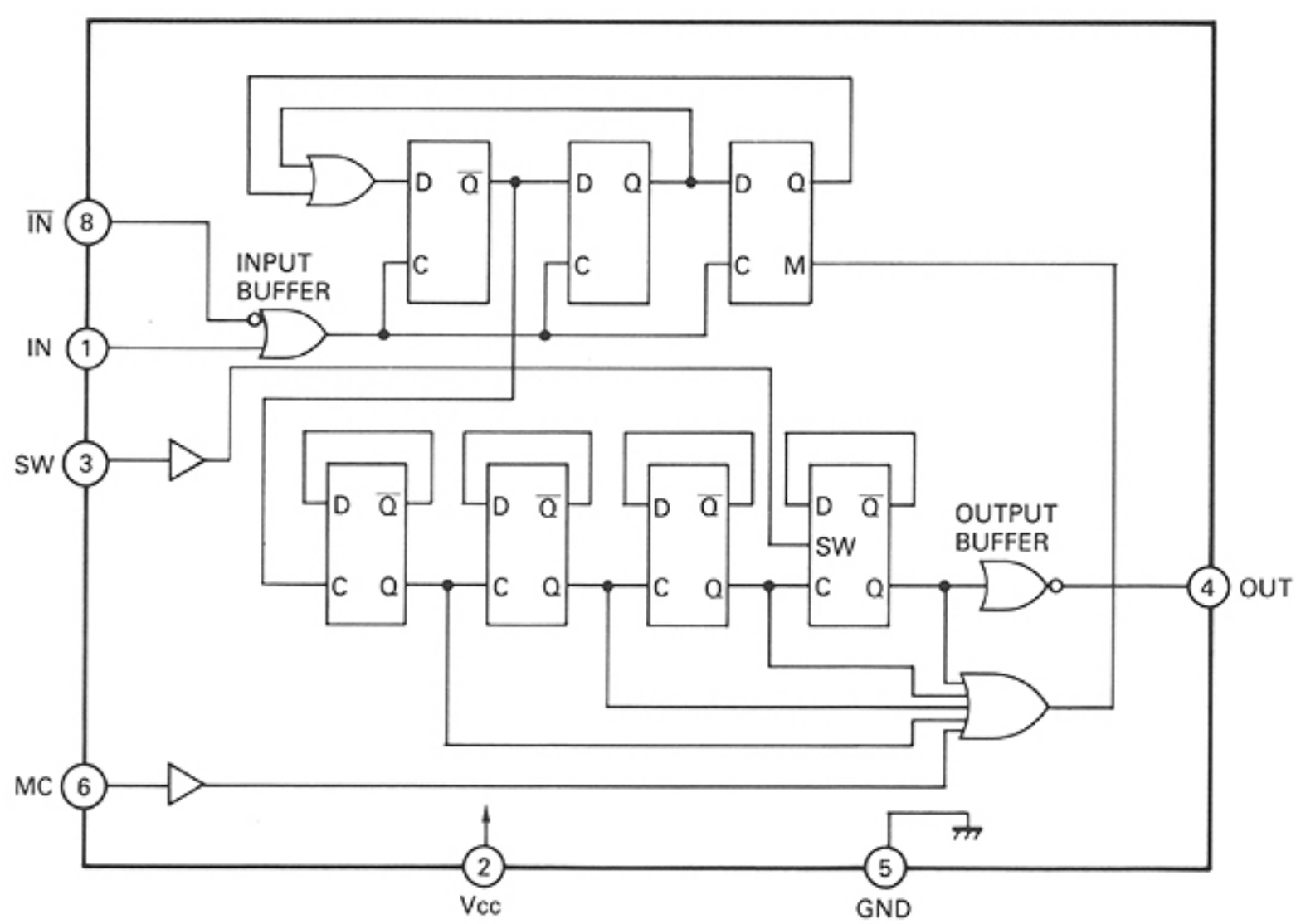

MC3357 (LOW POWER FM IF)

MAXIMUM RATINGS

DESCRIPTION	SYMBOL	RATINGS	UNIT
Power Supply Voltage	V_{CC} (max)	12	V
Operating Supply Voltage	V_{CC}	4 or 8	V
Detector Input Voltage	—	1.0	Vp-p
Input Voltage ($V_{CC} \geqslant$ 6.0 Volts)	V_{16}	1.0	V_{RMS}
Mute Function	V_{14}	−0.5 ~ 5.0	Vpk
Junction Temperature	T_J	150	°C
Operating Temperature	T_{OPR}	−30 ~ 70	°C
Storage Temperature	T_{STG}	−65 ~ 150	°C

PIN CONNECTION

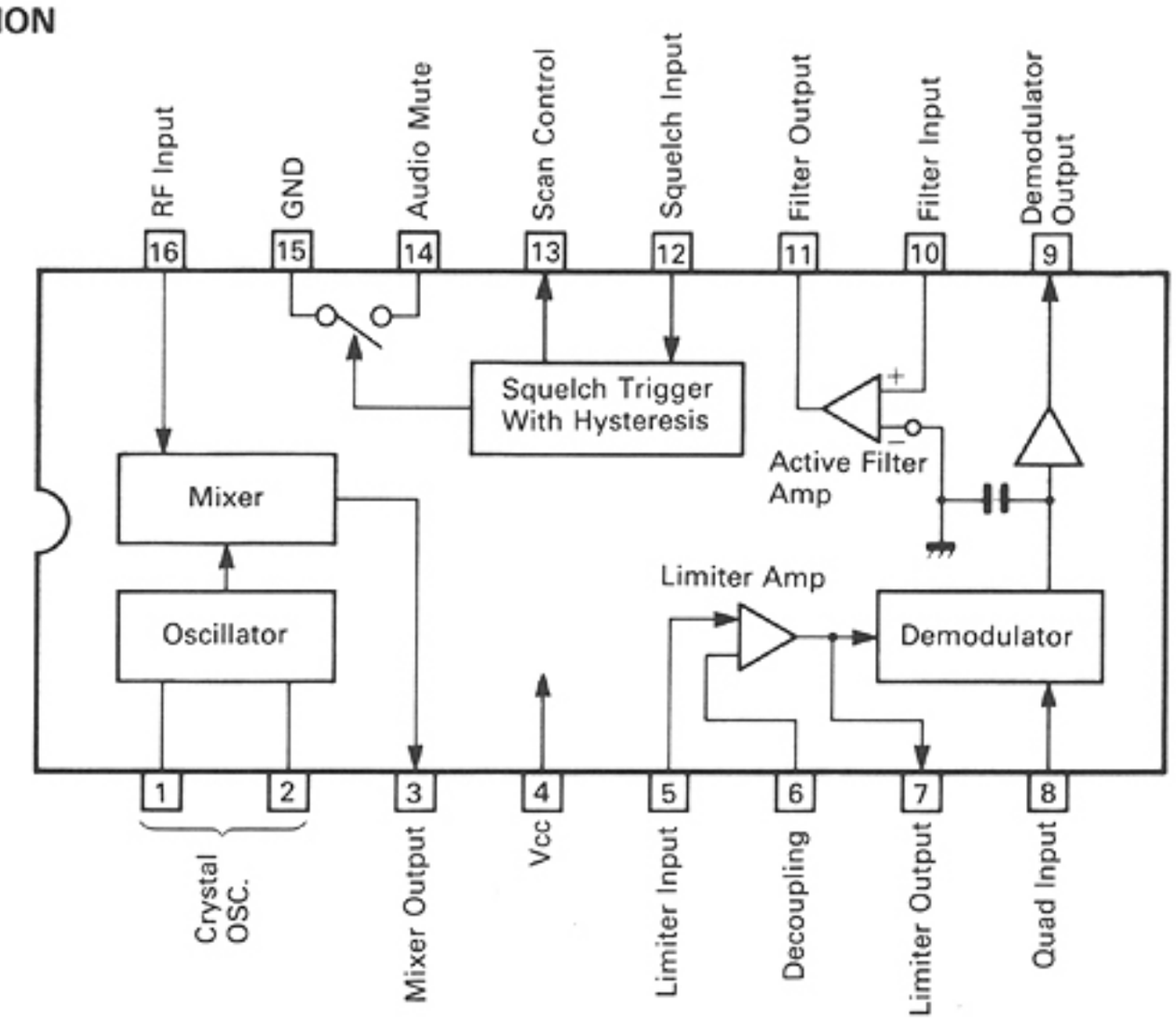

LM386N-3 (LOW VOLTAGE AUDIO POWER AMPLIFIER)

MAXIMUM RATINGS (Ta = 25°C)

DESCRIPTION	SYMBOL	RATINGS	UNIT
Supply Voltage	V_{CC}	15	V
Package Dissipation	P_D	600	mW
Drive Input Voltage	DV_{IN}	+0.4	V
Operating Temperature	T_{OPR}	0 ~ 70	°C
Stroage Temperature	T_{STG}	−65 ~ 150	°C

PIN CONNECTION

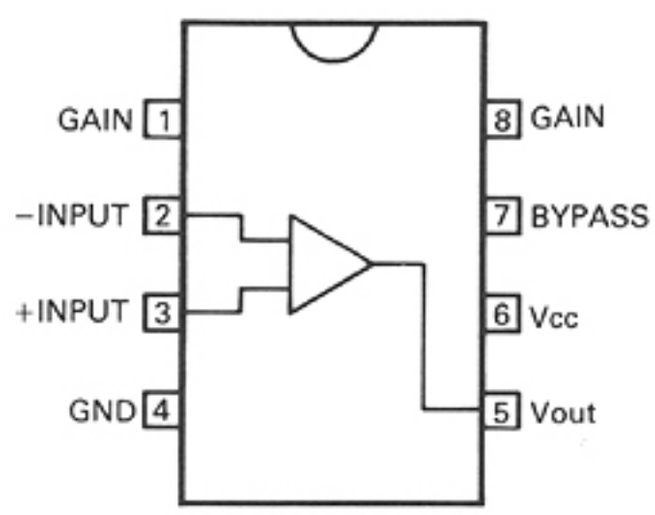

SC-1046, SC-1050 (VHF POWER AMPLIFIER)

MAXIMUM RATINGS

DESCRIPTION	SYMBOL	RATINGS	UNIT
Supply Voltage	V_{CC}	16	V
Bias Voltage	V_{BB}	6	V
Input Power	P_I	40	mW
Operating Temperature	T_{OPR}	−30~100	°C
Storage Temperature	T_{STG}	−40~110	°C

PIN CONNECTION

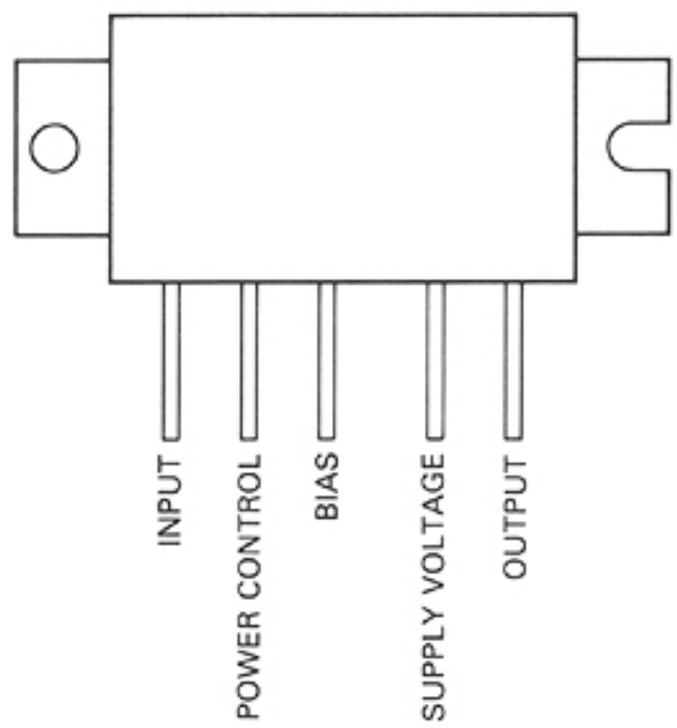

μPC358C (DUAL DRIVER)

MAXIMUM RATINGS (Ta = 25°C)

DESCRIPTION	SYMBOL	RATINGS	UNIT
Supply Voltage	V_{CC}	32	V
Drive Input Voltage	DV_{IN}	32	V
Input Voltage	V_{IN}	−0.3~32	V
Permissible Dissipation	P_D	350	mW
Operating Temperature	T_{OPR}	0~70	°C
Storage Temperature	T_{STG}	−55~125	°C

PIN CONNECTION

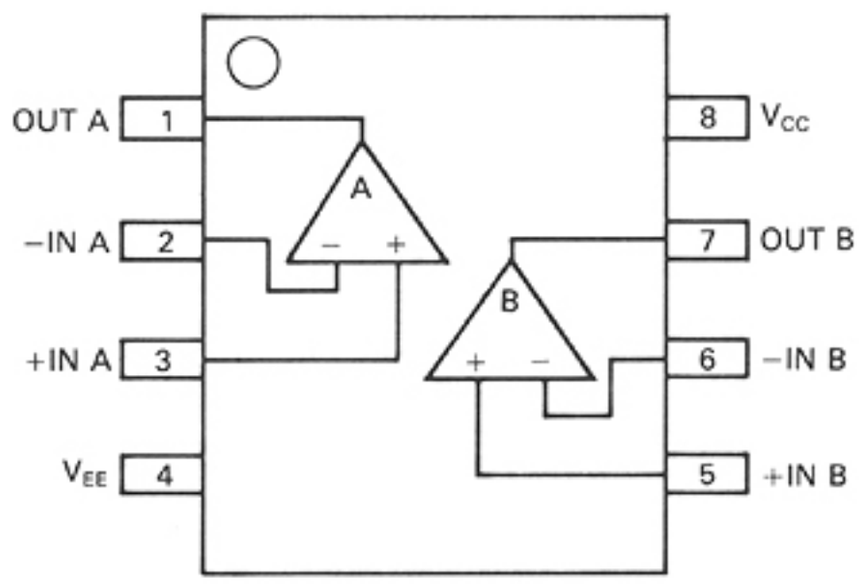

μPD4066BG (QUAD BILATERAL SWITCH)

MAXIMUM RATINGS (Ta = 25°C)

DESCRIPTION	SYMBOL	RATINGS	UNIT
Supply Voltage	V_{DD}	−0.5~20	V
Input Voltage	V_{IN}	−0.5~V_{DD}+0.5	V
Input Current	I_{IN}	10	mA
Permissible Dissipation	P_D	200	mW
Operating Temperature	T_{OPR}	−40~85	°C
Storage Temperature	T_{STG}	−65 ~ 125	°C

PIN CONNECTION

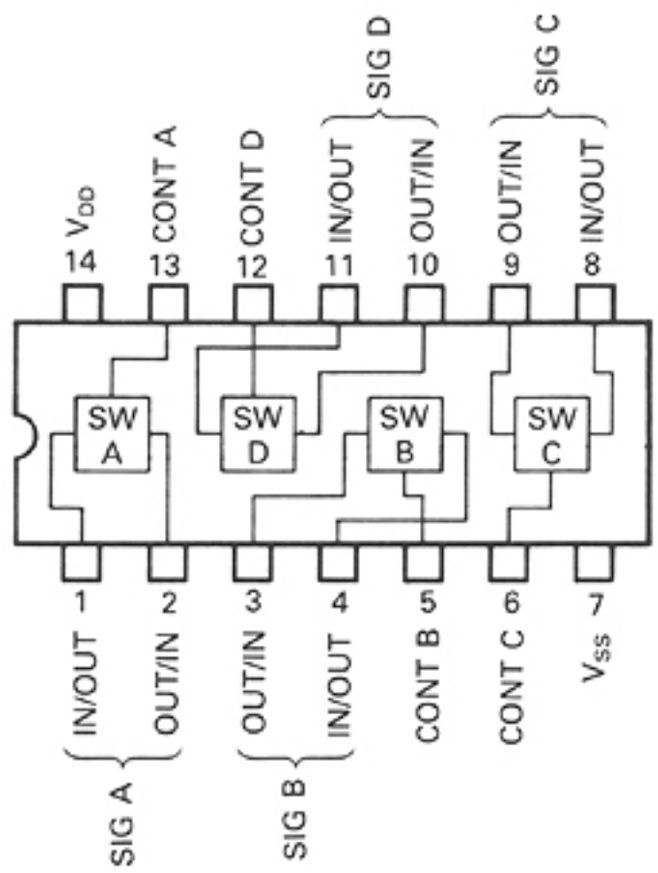

μPD4069UBG (HEX INVERTER)

MAXIMUM RATINGS

DESCRIPTION	SYMBOL	RATINGS	UNIT
Supply Voltage	V_{DD}	V_{SS}−0.5~V_{SS}+20	V
Input Voltage	V_{IN}	V_{SS}−0.5~V_{DD}+0.5	V
Output Voltage	V_{OUT}	V_{SS}−0.5~V_{DD}+0.5	V
Input Current	I_{IN}	±10	mA
Permissible Dissipation	P_D	300	mW
Storage Temperature	T_{STG}	−65~150	°C

PIN CONNECTION

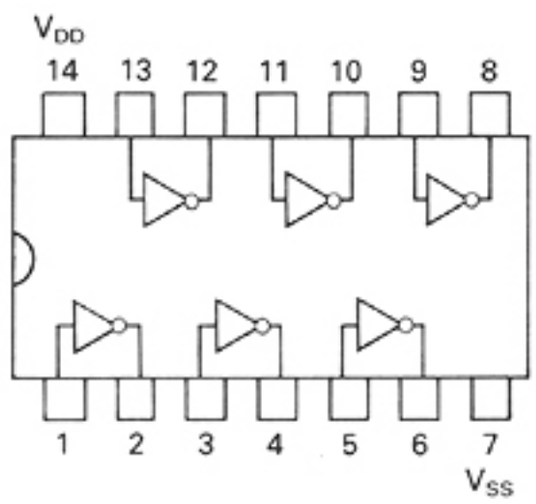

μPD 7225G (PROGRAMMABLE LCD DRIVER)

MAXIMUM RATINGS (Ta = 25°C)

DESCRIPTION	SYMBOL	RATINGS	UNIT
Supply Voltage	V_{DD}	−0.3~7.0	V
Input Voltage	V_{IN}	−0.3~V_{DD}+0.3	V
Output Voltage	V_{OUT}	−0.3~V_{DD}+0.3	V
Operating Temperature	T_{OPR}	−10~70	°C
Storage Temperature	T_{STG}	−65~150	°C

PIN CONNECTION

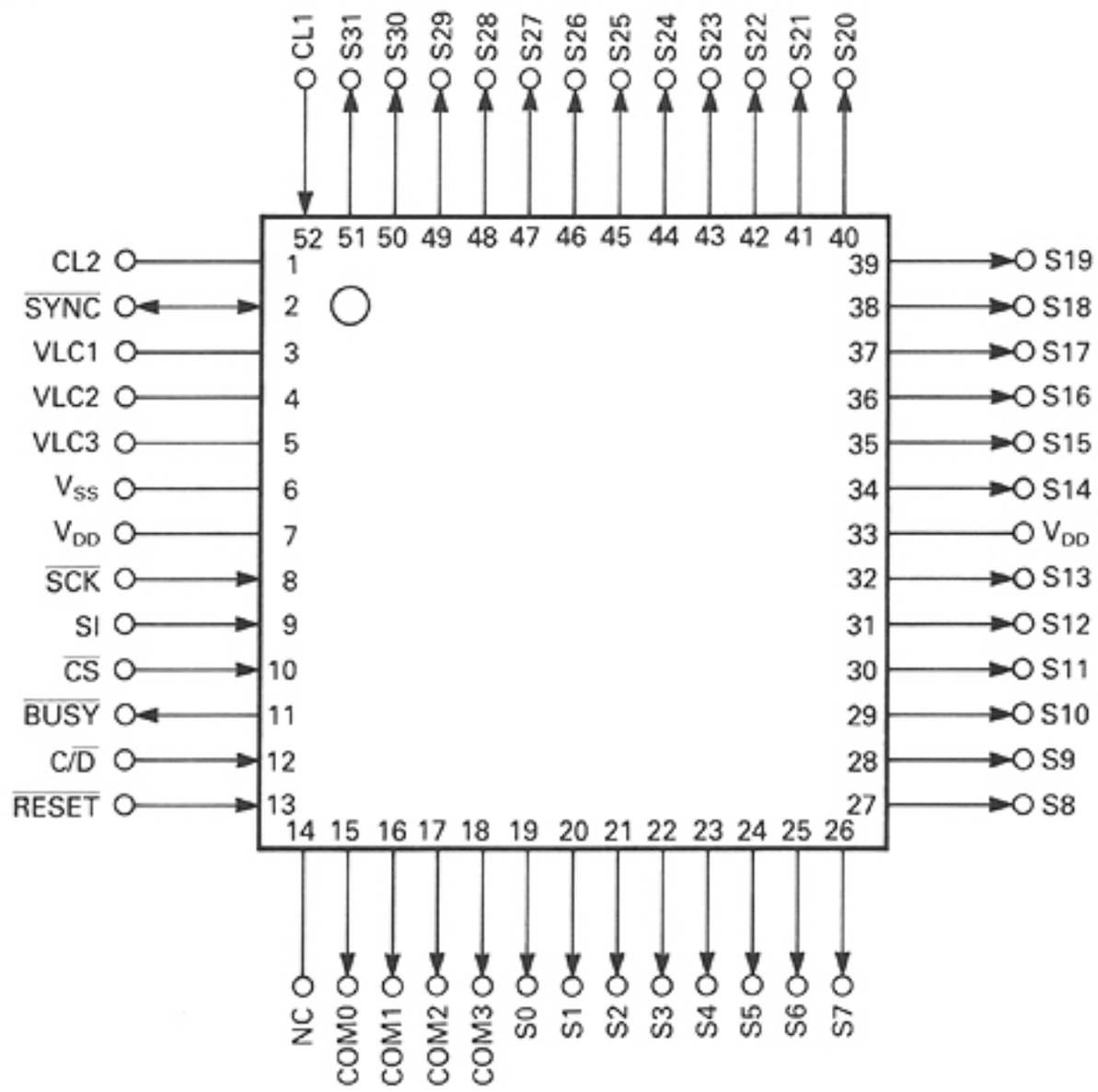

BLOCK DIAGRAM

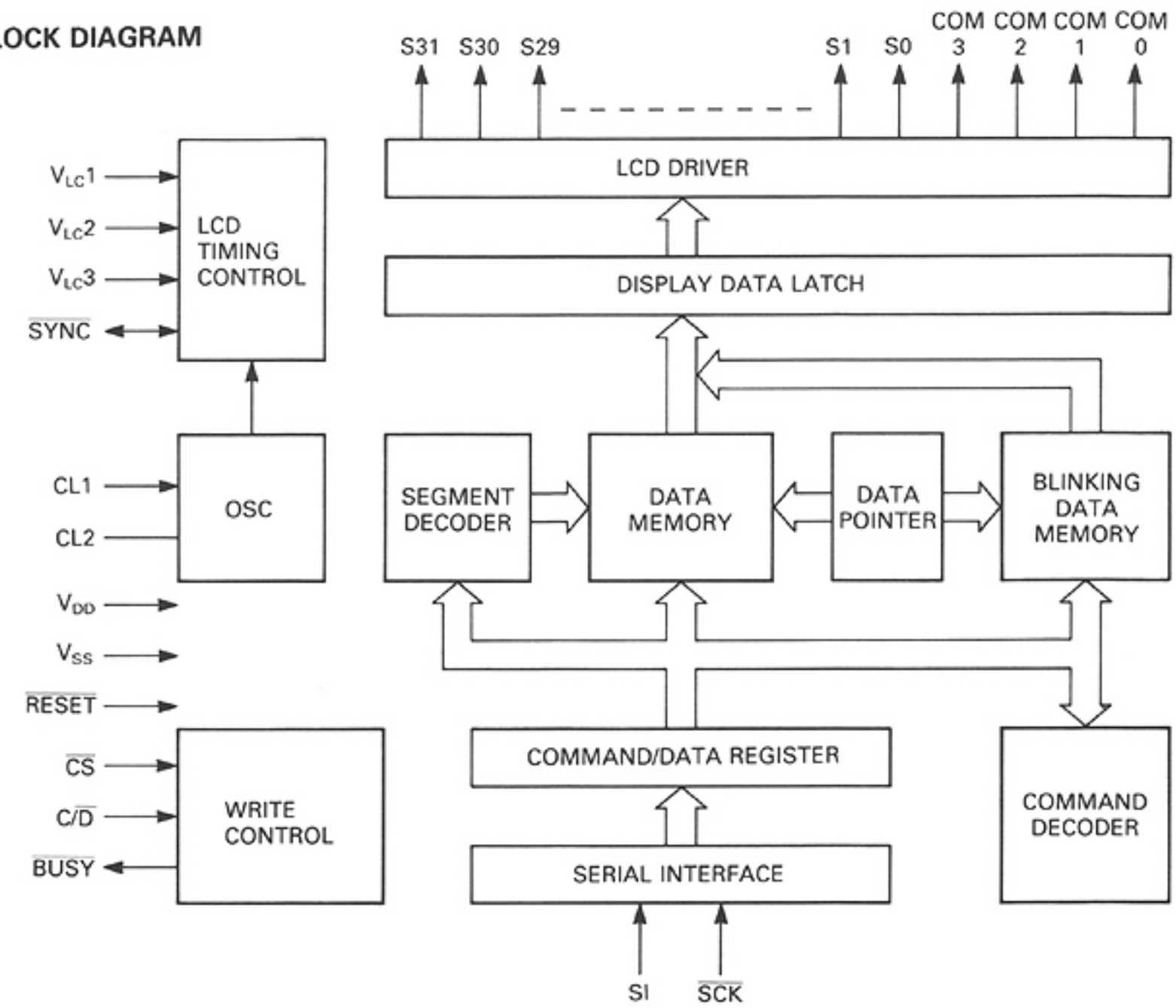

LR40872 (DUAL TONE MULTI FREQUENCY IC)

MAXIMUM RATINGS (Ta = 25°C)

DESCRIPTION	SYMBOL	RATINGS	UNIT
Supply Voltage	V_{CC}	10.5	V
Input Voltage	V_{IN}	−0.3~V_{CC}+0.3	V
Power Dissipation	P_D	500	mW
Operating Temperature	T_{OPR}	−30~60	°C
Storage Temperature	T_{STG}	−55 ~ 150	°C

PIN CONNECTION

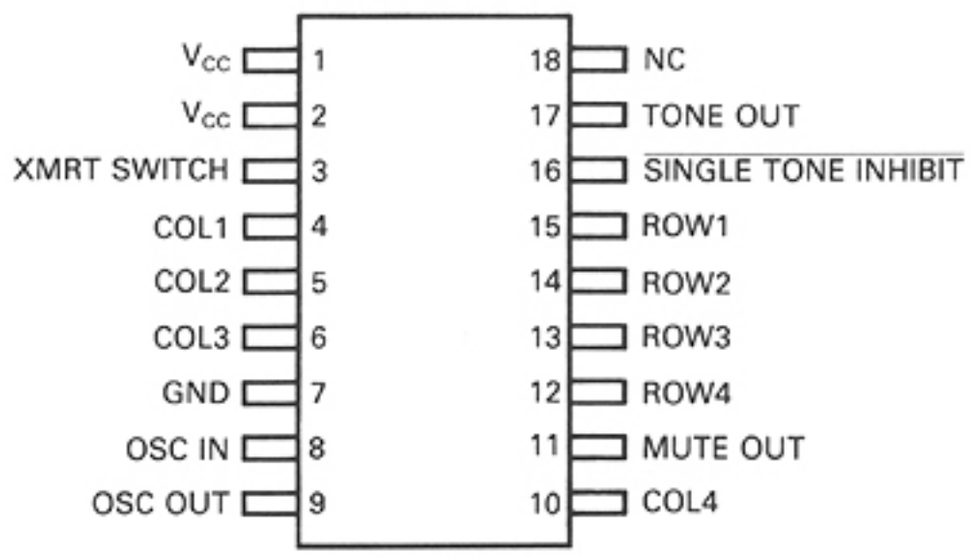

MN6520 (CTCSS ENCODER DECODER)

MAXIMUM RATINGS (Ta = 25°C)

DESCRIPTION	SYMBOL	RATINGS	UNIT
Supply Voltage	V_{DD}	−0.2~7.0	V
Input And Output Voltage	V_T	−0.2~V_{DD}+0.2	V
Power Dissipation	P_D	100	mW
Operating Temperature	T_{OPR}	−20~70	°C
Storage Temperature	T_{STG}	−55~100	°C

PIN CONNECTION

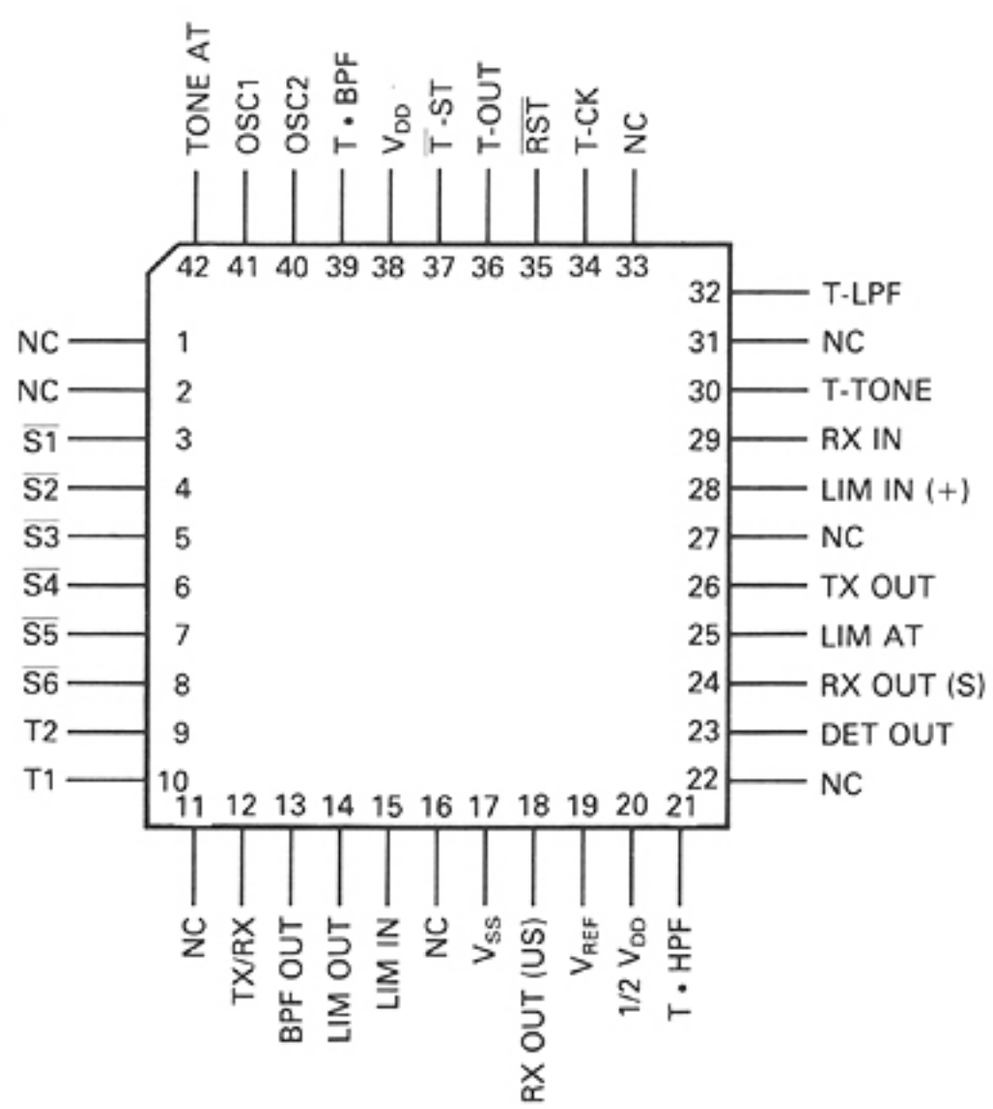

SECTION 12 BATTERY PACK SCHEMATIC DIAGRAMS

12 - 1 IC-CM7

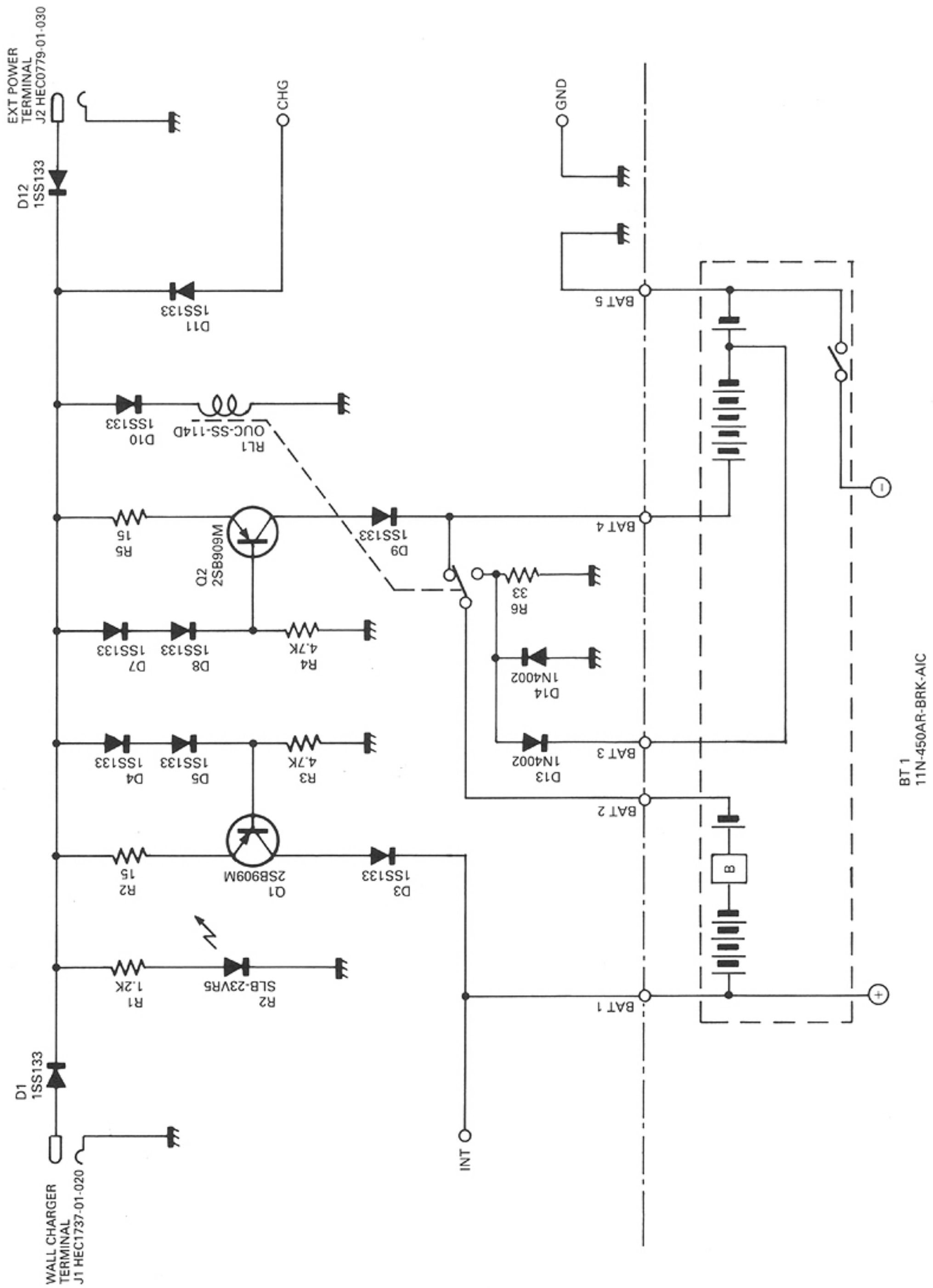

12 - 2 IC-CM8

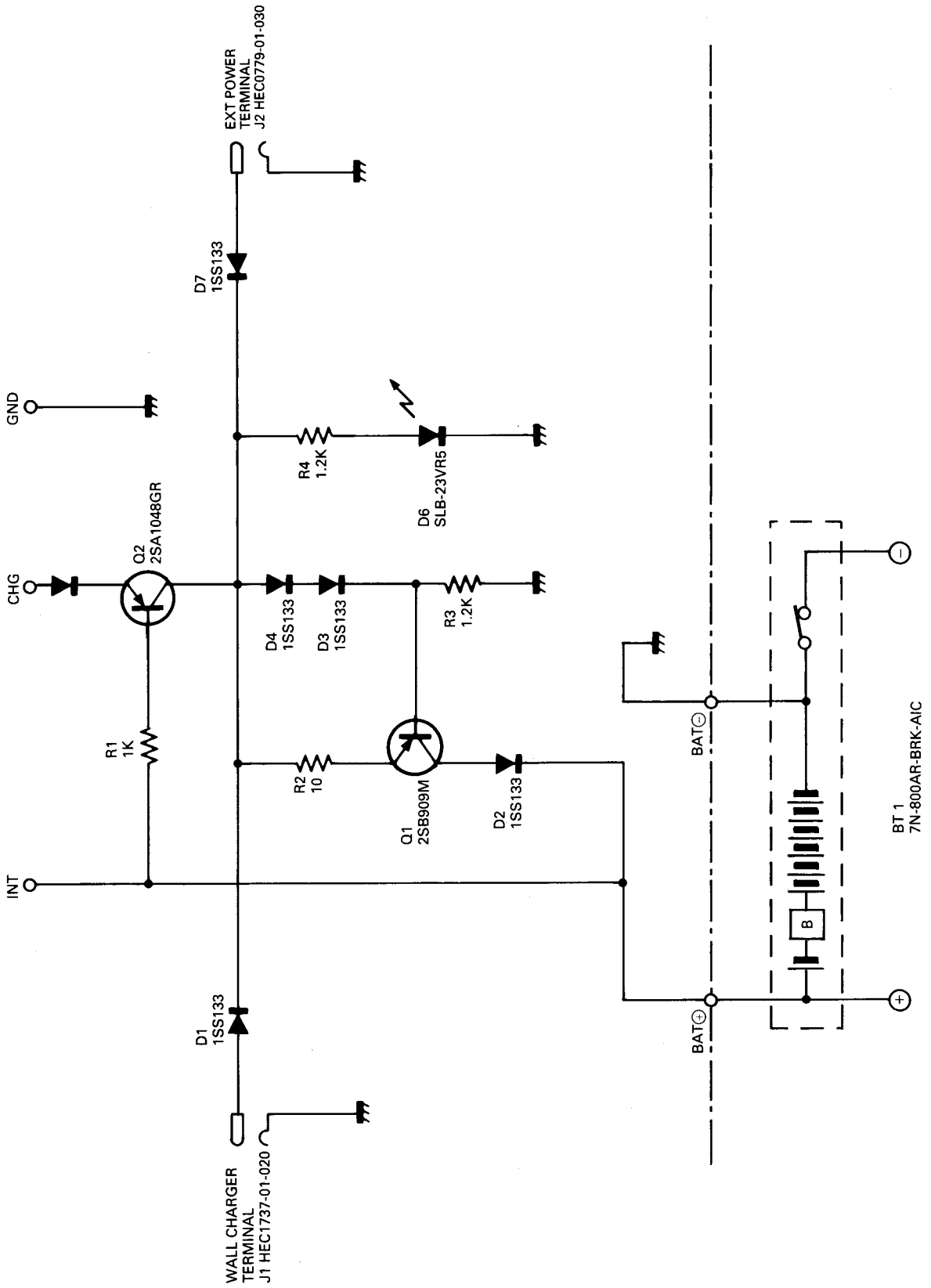
EXT POWER
TERMINAL
J2 HEC0779-01-030
D7
1SS133
GND
R4
1.2K
D6
SLB-23VR5
Q2
2SA1048GR
CHG
D4
1SS133
D3
1SS133
R3
1.2K
R1
1K
R2
10
Q1
2SB909M
D2
1SS133
INT
D1
1SS133
WALL CHARGER
TERMINAL
J1 HEC1737-01-020
BAT⊖
BAT⊕
BT 1
7N-800AR-BRK-AIC
B

IC-H16 SCHEMATIC DIAGRAM

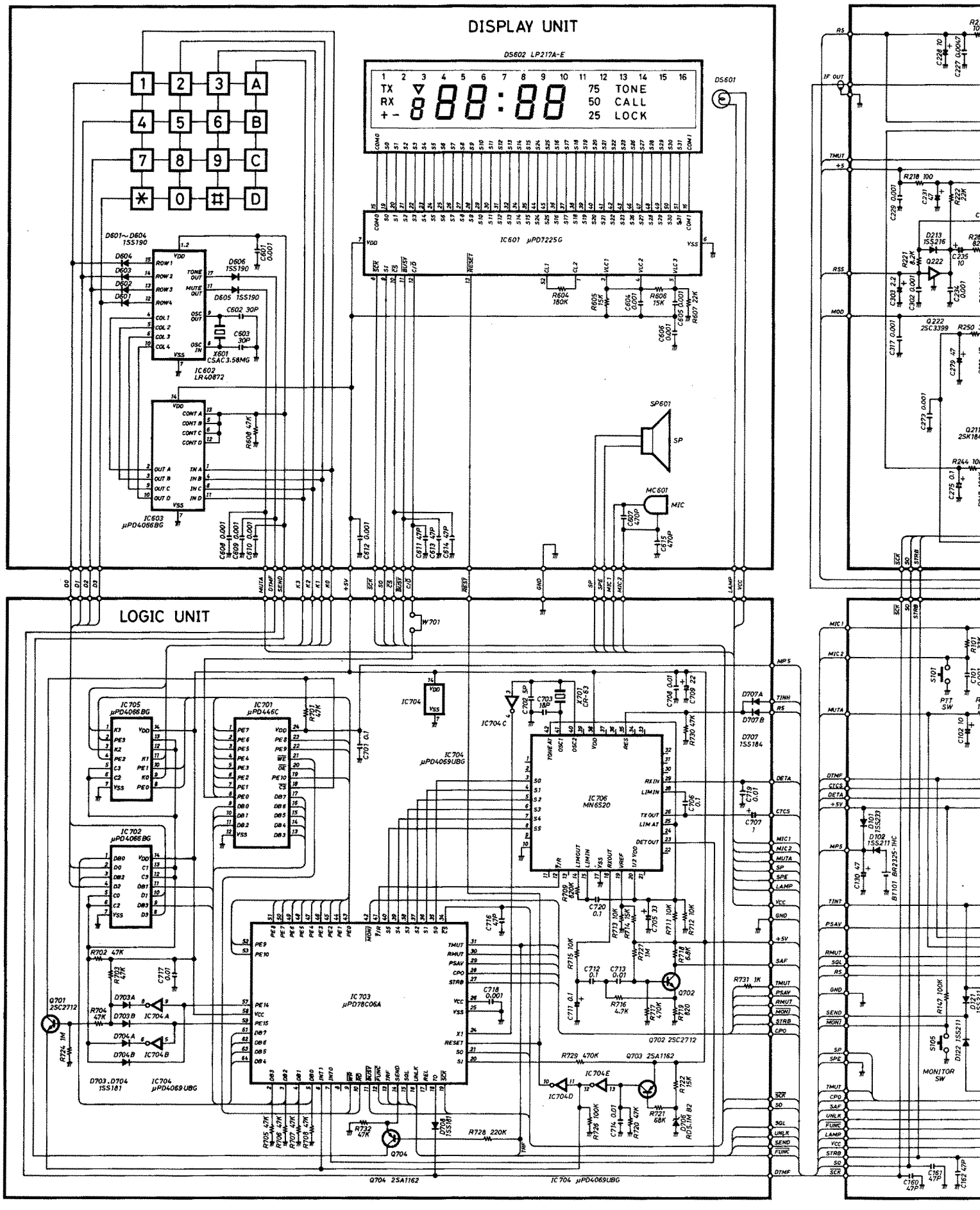

GRAM

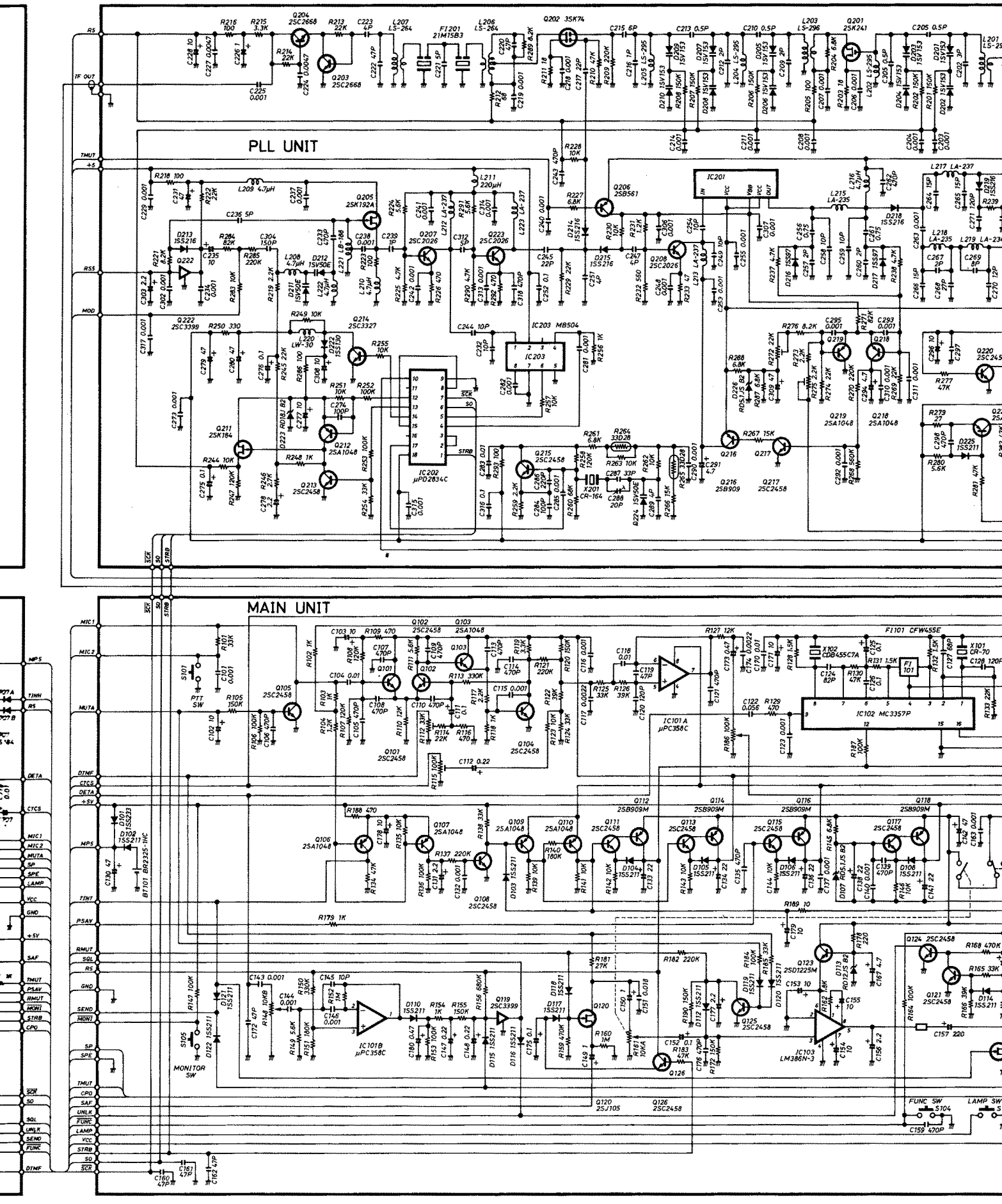

ICOM ICOM INCORPO

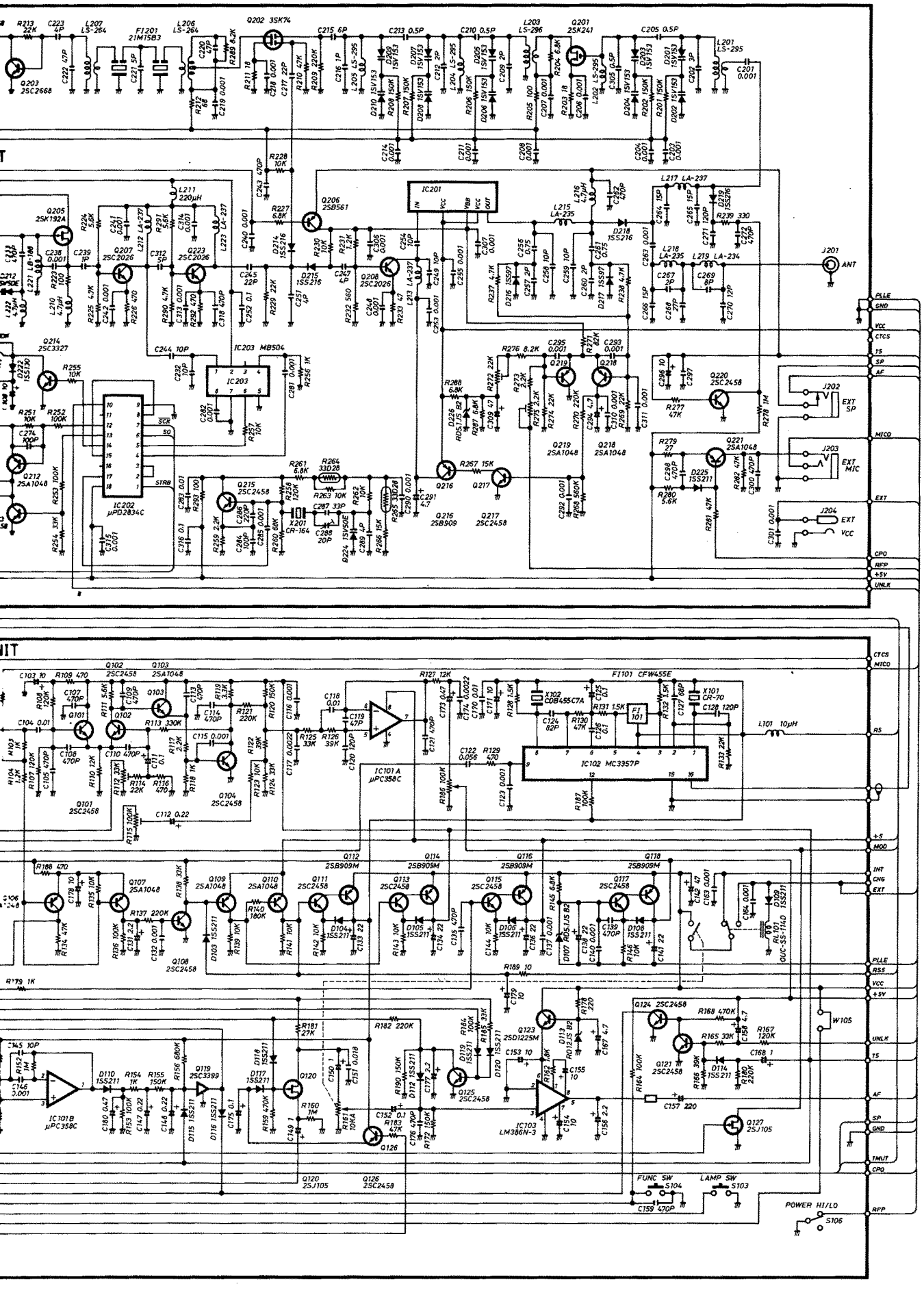
IC201
IC203 MB504
IC202 μPD2834C
IC101A μPC358C
IC102 MC3957P
IC101B μPC358C
IC103 LM386N-3
J201 ANT
J202 EXT SP
J203 EXT MIC
J204 EXT VCC
W105
FUNC SW S104
LAMP SW S103
POWER HI/LO S106
PLLE
GND
VCC
CTCS
TS
SP
AF
MICO
EXT
CPO
RFP
+5V
UNLK
RS
+5
MOD
INT
CHG
TMUT