SERVICE MANUAL

MF/HF MARINE TRANSCEIVER

IC-M803

S-15612XZ-C1
March 2020

Icom Inc.

INTRODUCTION

This service manual describes the latest technical information for the IC-M803 MF/HF MARINE TRANSCEIVER at the time of publication.

MODEL	VERSION	VERSION NUMBER
IC-M803	USA	#11

To upgrade quality, any electrical or mechanical parts and internal circuits are subject to change without notice or obligation.

SERVICE CAUTION

NEVER connect the transceiver to an AC outlet or to a DC power supply that outputs more than the specified voltage. This will ruin the transceiver.

DO NOT expose the transceiver's main unit to rain, snow or liquids.

DO NOT reverse the polarity of the DC power cable when directly connecting to the transceiver.

DO NOT apply an RF signal of more than 20 dBm (100 mW) to the antenna connector. This could damage the transceiver's front-end.

ORDERING PARTS

Be sure to include the following four points when ordering replacement parts:

1. 10-digit Icom part number
2. Component name
3. Equipment model name and unit name
4. Quantity required

<ORDER EXAMPLE>

1130016460	R2A20169SA	IC-M803	MAIN UNIT	5 pieces
8930102460	4100 IC CLIP	IC-M803	CHASSIS	1 piece

Addresses are provided on the inside back cover for your convenience.

REPAIR NOTES

1. Make sure that the problem is internal before disassembling the transceiver.
2. **DO NOT** open the transceiver until it is disconnected from its power source.
3. **DO NOT** short any circuits or electronic parts.
4. **DO NOT** keep power ON for a long time when the transceiver is defective.
5. **NEVER** directly transmit power into any test equipment such as Standard Signal Generator, otherwise the RF power may damage them.
6. **ALWAYS** connect a 50 dB to 60 dB attenuator between the transceiver and such test equipment.
7. **READ** the instructions of the test equipment thoroughly before connecting it to the transceiver.
8. If the front panel and case of the remote controller are separated and reassembled, waterproof performance will not be guaranteed unless the specified waterproof check is performed.

Icom, Icom Inc. and the Icom logo are registered trademarks of Icom Incorporated (Japan) in Japan, the United States, the United Kingdom, Germany, France, Spain, Russia, Australia, New Zealand, and/or other countries.

TABLE OF CONTENTS

SECTION 1 SPECIFICATIONS

SECTION 2 INSIDE VIEWS

SECTION 3 DISASSEMBLY INSTRUCTION

SECTION 4 INTERFACE INFORMATION

SECTION 5 ADJUSTMENT PROCEDURE

5-1 PREPARATION 5-1
5-2 FREQUENCY ADJUSTMENT 5-3
5-3 RECEIVE ADJUSTMENTS 5-3
5-4 TRANSMIT ADJUSTMENTS 5-4
5-5 BACKUP BATTERY FLOWING CURRENT VERIFICATION 5-6
5-6 DSC SELF CHECK TEST 5-6

SECTION 6 PARTS LIST

SECTION 7 MECHANICAL PARTS

SECTION 8 BOARD LAYOUTS5

SECTION 9 WIRING DIAGRAM

SECTION 10 BLOCK DIAGRAM

SECTION 11 VOLTAGE DIAGRAM1

SECTION 1 SPECIFICATIONS

■ GENERAL

• **Frequency coverage:**		
Transceiver	RX	0.5 ~ 29.9999 MHz (Continuously)
	TX	1.6 ~ 2.9999 MHz
		4.0 ~ 4.9999 MHz
		6.0 ~ 6.9999 MHz
		8.0 ~ 8.9999 MHz
		12.0 ~ 13.9999 MHz
		16.0 ~ 17.9999 MHz
		18.0 ~ 19.9999 MHz
		22.0 ~ 22.9999 MHz
		25.0 ~ 27.5000 MHz
DSC receiver		2.1875 MHz, 4.2075 MHz, 6.3120 MHz, 8.4145 MHz, 12.5770 MHz, 16.8045 MHz
• **Operating mode:**		
Transceiver		J3E (USB/LSB), J2B (AFSK), F1B (FSK), A1A (CW), and H3E (AM: RX only)
DSC receiver		J2B
• **Antenna impedance:**		50 Ω (unbalanced)
• **Frequency stability:**		
Transceiver		±10 Hz (29.9999 MHz or less)
DSC receiver		±10 Hz
• **Power supply voltage:**		13.6 V DC ±15% (negative ground)
• **Current drain:**		
RX	(at maximum audio)	Less than 3.0 A
TX	(at maximum power)	Less than 30 A
• **Operating temperature range:**		−20ºC~+55ºC (−4ºF~+131ºF)
• **Dimensions** (projections not included)**:**		
Transceiver's main unit		240 (W) × 94 (H) × 238 (D) mm, 9.4 (W) × 3.7 (H) × 9.4 (D) inches
Remote controller		274 (W) × 114 (H) × 86 (D) mm, 10.8 (W) × 4.5 (H) × 3.4 (D) inches
• **Weight** (approximate)**:**		
Transceiver's main unit		4.41 kg, 9.7 lb
Remote controller		760 g, 1.7 lb

■ TRANSMITTER

• **Output power:**	150/100/60/20 W PEP (1.6~27.5000 MHz)
• **Spurious emission:**	Less than −62 dB (peak output power)
• **Carrier suppression:**	More than 40 dB (peak output power)
• **Unwanted sideband suppression:**	More than 55 dB (peak output power with 1500 Hz AF input)

■ RECEIVER

• **Sensitivity:**			
Transceiver			
J3E, A1A	0.5~1.5999 MHz	30 dBμV emf (20 dB SINAD)	/ 16 dBμV (10 dB S/N)
	1.6~1.7999 MHz	13 dBμV emf (20 dB SINAD)	/ –1 dBμV (10 dB S/N)
	1.8~29.9999 MHz	8 dBμV emf (20 dB SINAD)	/ –6 dBμV (10 dB S/N)
J2B, F1B	1.6~1.7999 MHz	4 dBμV emf (20 dB SINAD)	/ –10 dBμV (10 dB S/N)
	1.8~29.9999 MHz	−1 dBμV emf (20 dB SINAD)	/ –15 dBμV (10 dB S/N)
H3E	0.5~1.5999 MHz	44 dBμV emf (20 dB SINAD)	/ 30 dBμV (10 dB S/N)
	1.6~1.7999 MHz	30 dBμV emf (20 dB SINAD)	/ 16 dBμV (10 dB S/N)
	1.8~3.9999 MHz	24 dBμV emf (20 dB SINAD)	/ 10 dBμV (10 dB S/N)
DSC receiver		6 dBμV emf (20 dB SINAD)	/ –8 dBμV (10 dB S/N)
		−6 dBμV emf (1% BER)	
• **Squelch Sensitivity:**			
J3E (at 12.230 MHz)		Less than +20 dBμV (threshold)	
		Less than +90 dBμV (tight)	
H3E (at 1.000 MHz)		Less than +30 dBμV (threshold)	
		Less than +110 dBμV (tight)	
• **Spurious rejection ratio:**			
Transceiver		More than 70 dB (0.5~29.9999 MHz)	
DSC receiver		More than 70 dB	
• **Clarity variable range:**		±150 Hz	

All stated specifications are subject to change without notice or obligation.

• **LOGIC UNIT (Remote Controller)**

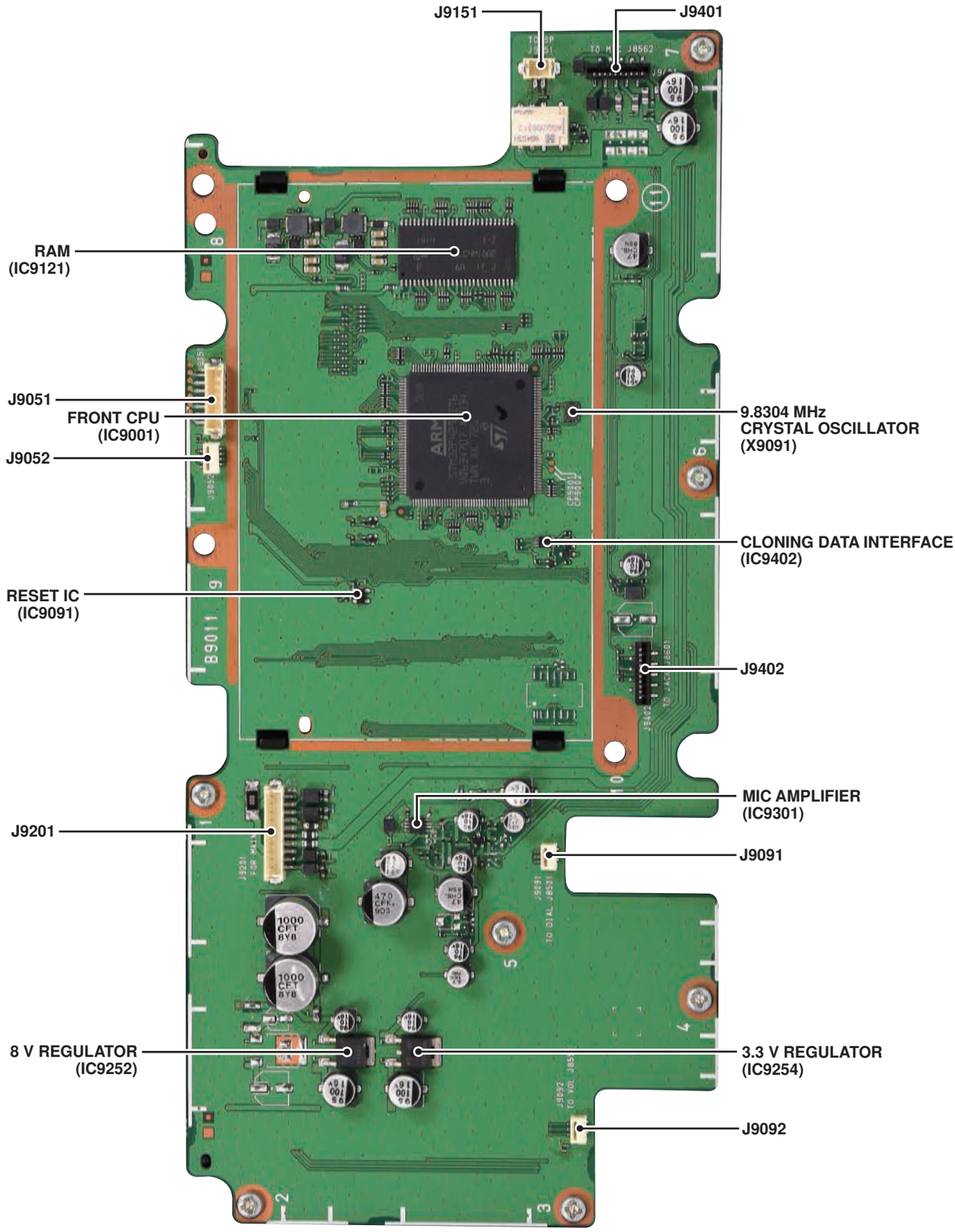

• **MAIN UNIT**

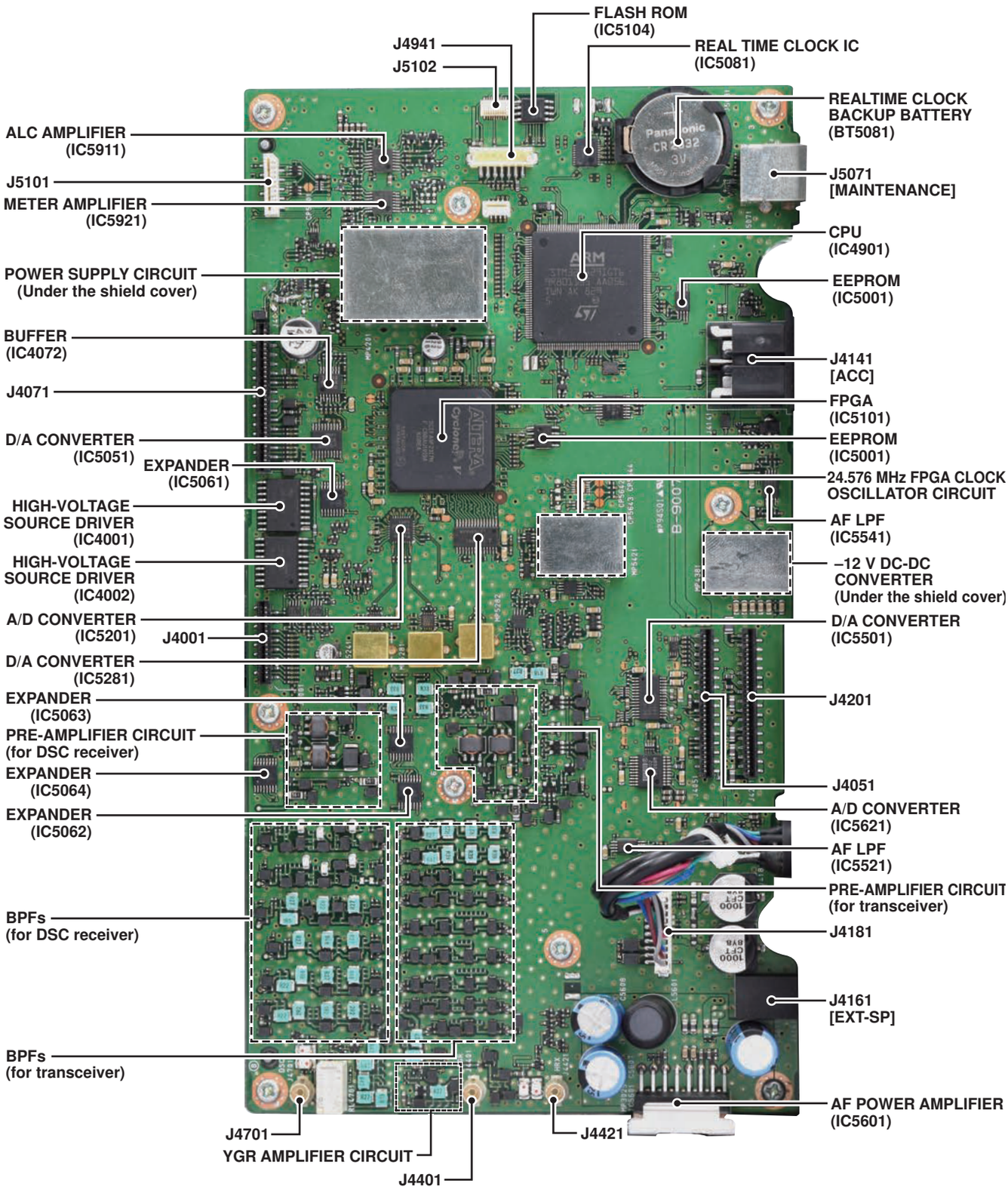
FLASH ROM (IC5104)
J4941
J5102
REAL TIME CLOCK IC (IC5081)
REALTIME CLOCK BACKUP BATTERY (BT5081)
ALC AMPLIFIER (IC5911)
J5101
METER AMPLIFIER (IC5921)
J5071 [MAINTENANCE]
CPU (IC4901)
POWER SUPPLY CIRCUIT (Under the shield cover)
EEPROM (IC5001)
BUFFER (IC4072)
J4141 [ACC]
J4071
FPGA (IC5101)
D/A CONVERTER (IC5051)
EEPROM (IC5001)
EXPANDER (IC5061)
24.576 MHz FPGA CLOCK OSCILLATOR CIRCUIT
HIGH-VOLTAGE SOURCE DRIVER (IC4001)
AF LPF (IC5541)
HIGH-VOLTAGE SOURCE DRIVER (IC4002)
–12 V DC-DC CONVERTER (Under the shield cover)
A/D CONVERTER (IC5201)
J4001
D/A CONVERTER (IC5501)
D/A CONVERTER (IC5281)
EXPANDER (IC5063)
J4201
PRE-AMPLIFIER CIRCUIT (for DSC receiver)
EXPANDER (IC5064)
J4051
EXPANDER (IC5062)
A/D CONVERTER (IC5621)
AF LPF (IC5521)
PRE-AMPLIFIER CIRCUIT (for transceiver)
BPFs (for DSC receiver)
J4181
J4161 [EXT-SP]
BPFs (for transceiver)
AF POWER AMPLIFIER (IC5601)
J4701
J4421
YGR AMPLIFIER CIRCUIT
J4401

• **PA UNIT**

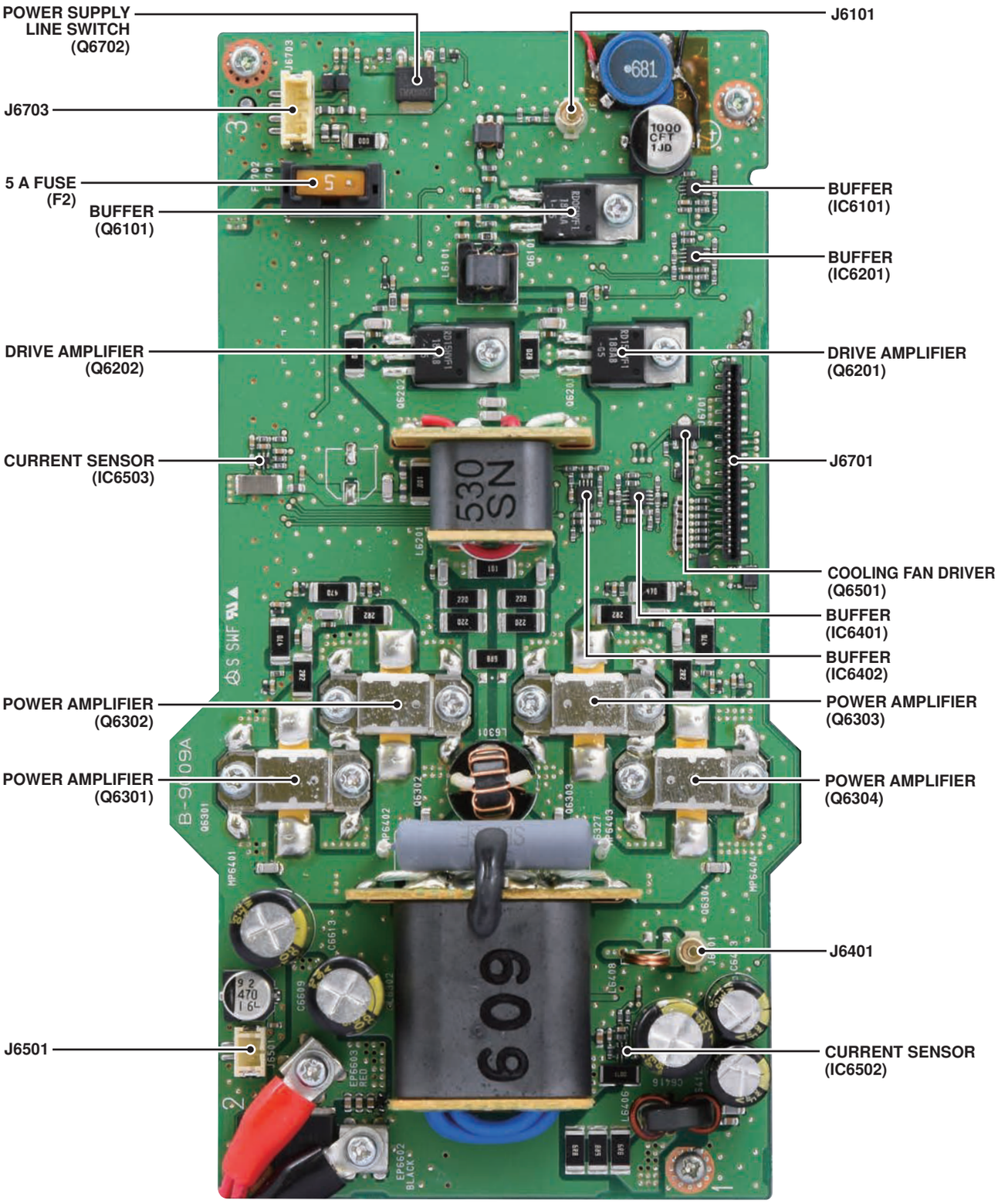
POWER SUPPLY LINE SWITCH (Q6702)
J6703
5 A FUSE (F2)
BUFFER (Q6101)
DRIVE AMPLIFIER (Q6202)
CURRENT SENSOR (IC6503)
POWER AMPLIFIER (Q6302)
POWER AMPLIFIER (Q6301)
J6501
J6101
BUFFER (IC6101)
BUFFER (IC6201)
DRIVE AMPLIFIER (Q6201)
J6701
COOLING FAN DRIVER (Q6501)
BUFFER (IC6401)
BUFFER (IC6402)
POWER AMPLIFIER (Q6303)
POWER AMPLIFIER (Q6304)
J6401
CURRENT SENSOR (IC6502)

• **FILTER UNIT**

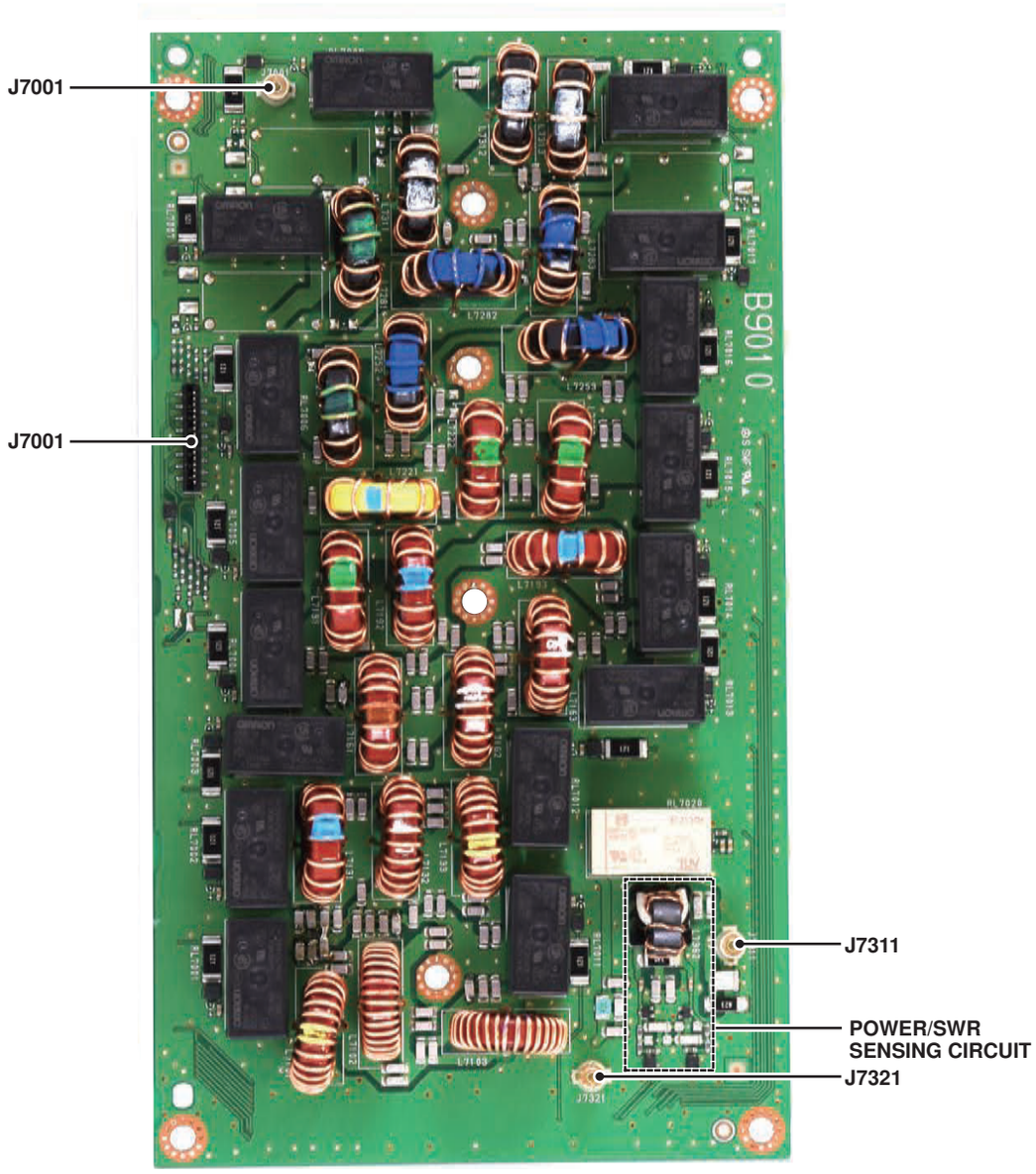

• CONNECT UNIT

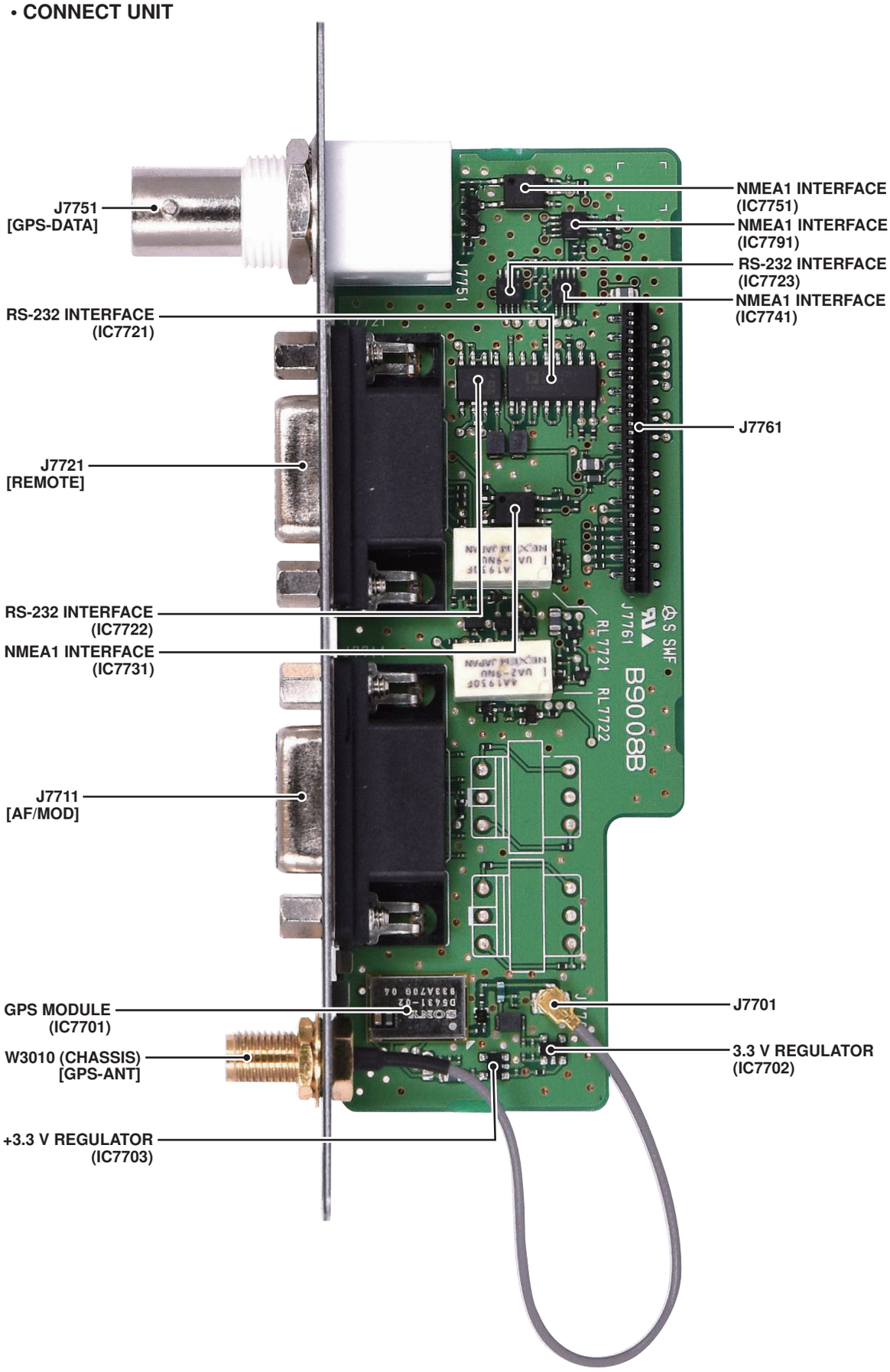

• **DC-DC UNIT**

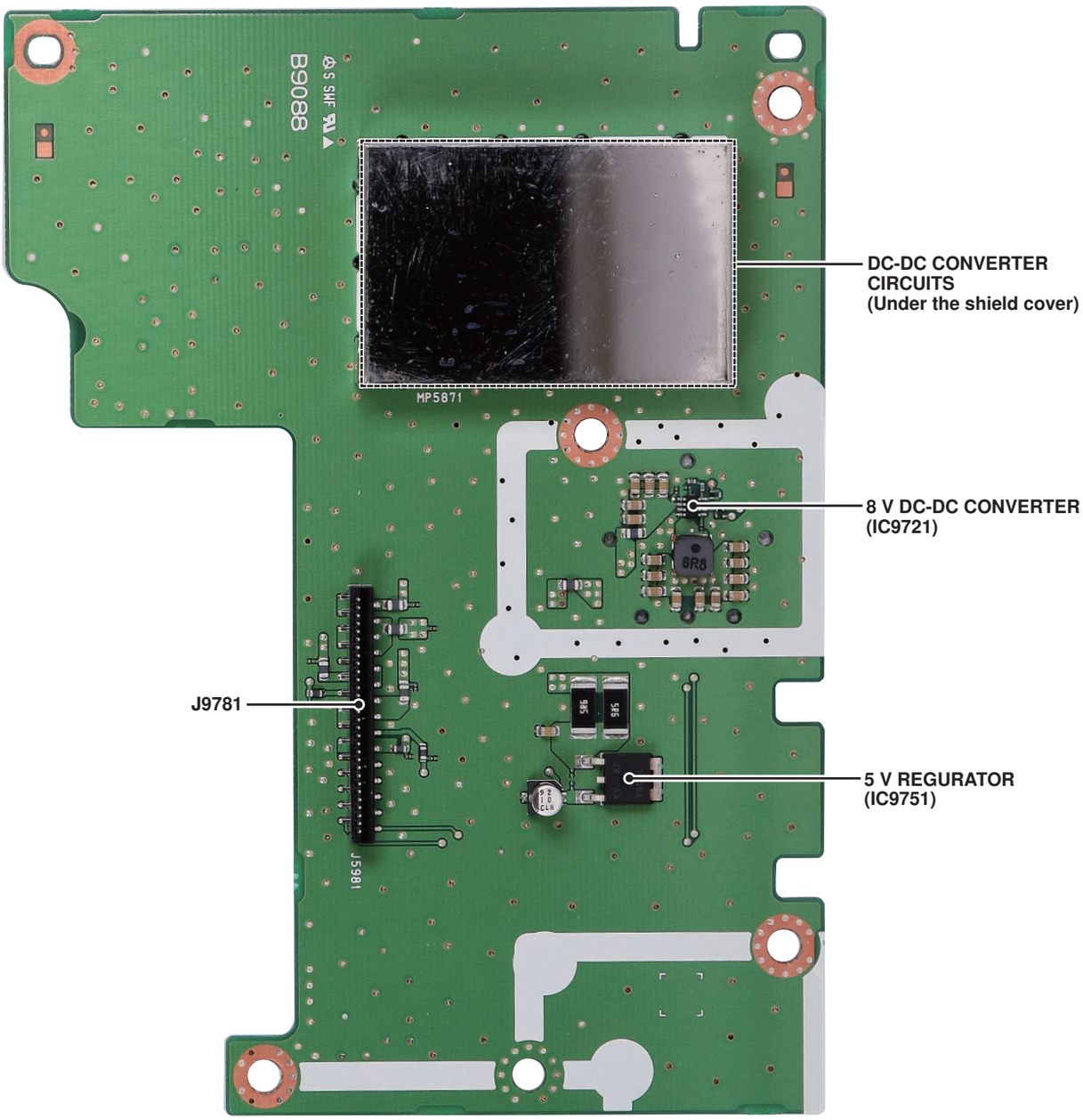
DC-DC CONVERTER
CIRCUITS
(Under the shield cover)
8 V DC-DC CONVERTER
(IC9721)
J9781
5 V REGURATOR
(IC9751)
B9088
MP5871
6R8
J5981

SECTION 3 DISASSEMBLY INSTRUCTION

1. REMOVING THE PA UNIT

1) Remove the 8 screws from the top cover, and then remove the top cover from the chassis.

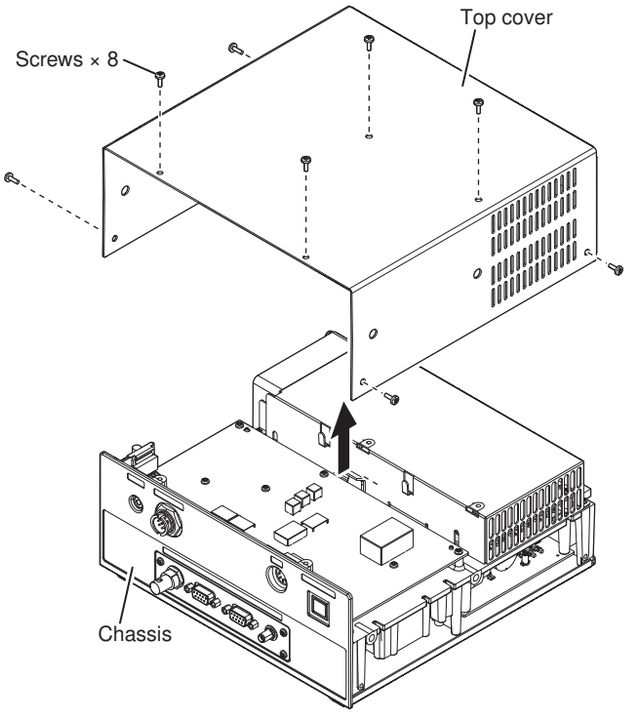

2) Remove the coaxial cable from the 2 cable hooks on the PA cover.

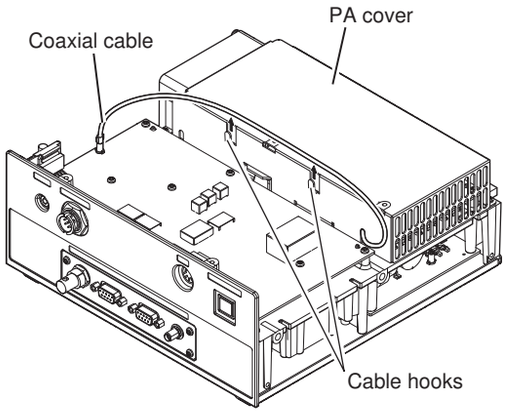

3) Remove the 8 screws from the PA cover, and then separate the PA cover from the chassis as shown in the illustration below.
Disconnect the cooling fan cable from the PA UNIT, and then remove the PA cover from the chassis.

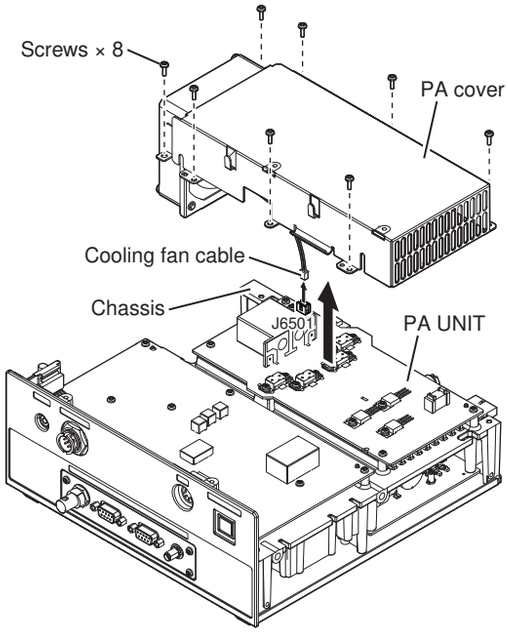

4) Disconnect the tuner cable, flat cable, and 2 coaxial cables from the PA UNIT.

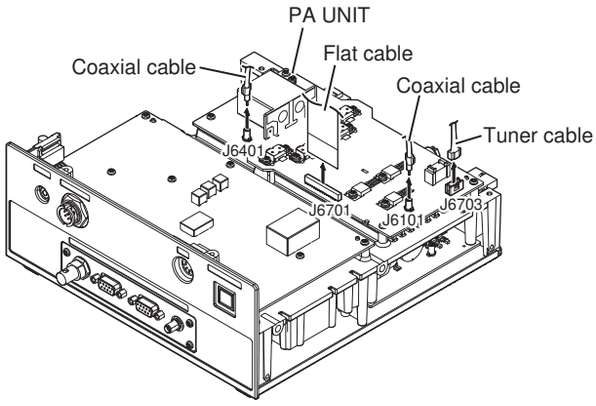

Continued on the next page…

1. REMOVING THE PA UNIT (continued)

5) Remove the 11 screws from the 3 FETs and the 4 FET covers on the PA UNIT.

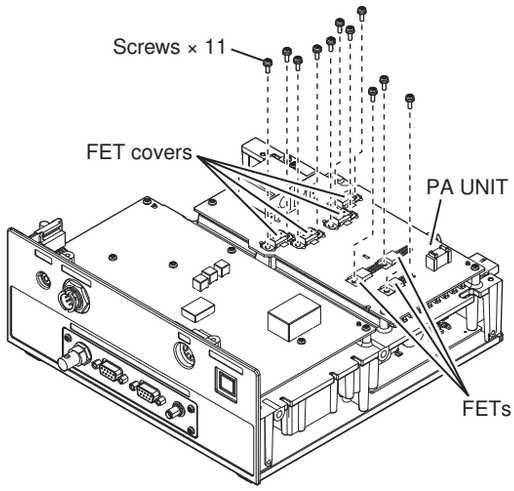

6) Remove the 2 screws from the DC power cables to disconnect the cables from the PA unit.

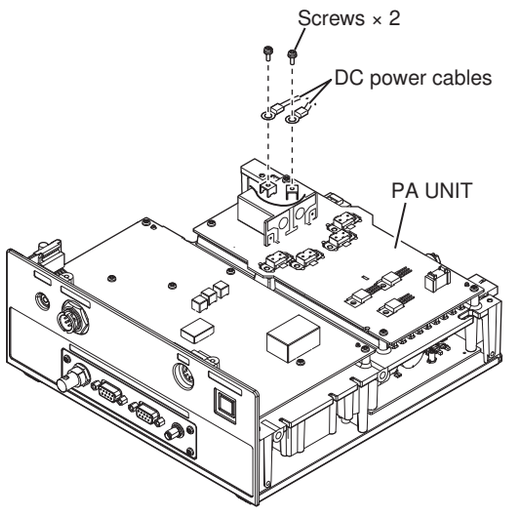

7) Remove the 4 screws from the PA UNIT, and then remove the PA UNIT from the chassis.

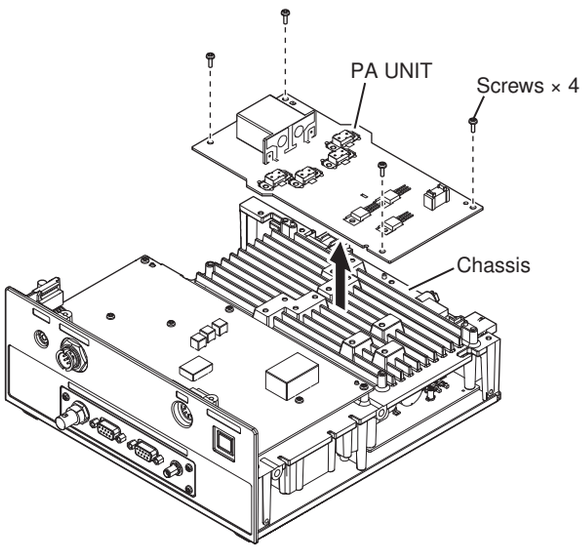

2. REMOVING THE MAIN UNIT

1) Remove the IC clip from the MAIN UNIT.
Disconnect the control cable, 2 coaxial cables, and 3 flat cables from the MAIN UNIT.

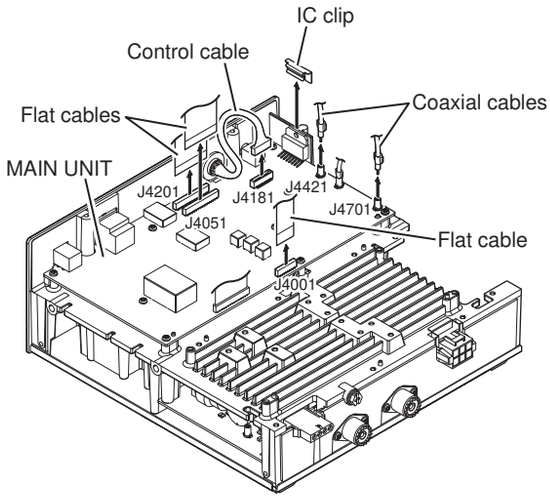

2) Remove the 9 screws from the MAIN UNIT, and then remove the MAIN UNIT from the chassis.

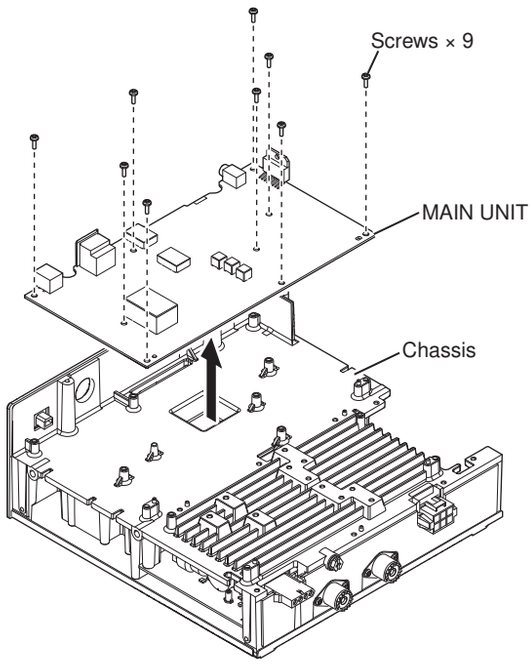

3. REMOVING THE CONNECT UNIT

1) Remove the 6 screws from the bottom cover, and then remove the bottom cover from the chassis.

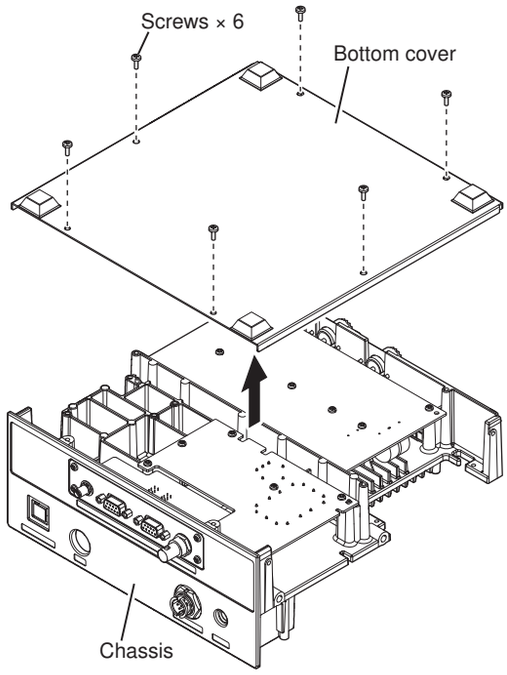

2) Remove the 4 screws from the D-sub plate, and then remove the CONNECT UNIT from the chassis.

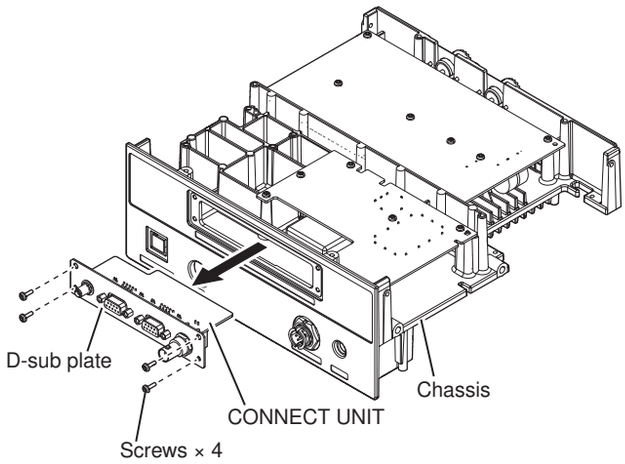

4. REMOVING THE DC-DC UNIT

Remove the 5 screws from the DC-DC UNIT, and then remove the DC-DC UNIT from the chassis.

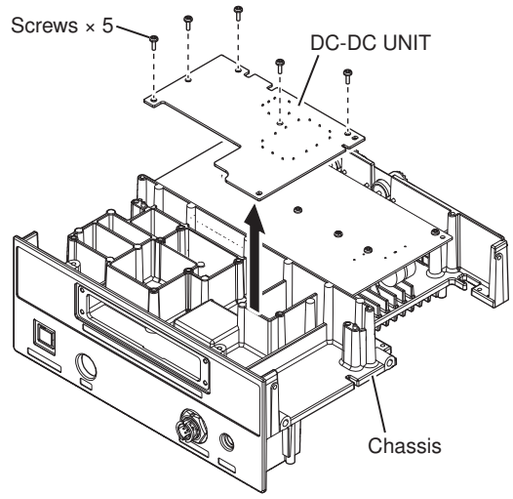

5. REMOVING THE FILTER UNIT

Remove the 8 screws from the FILTER UNIT, and then separate the FILTER UNIT from the chassis as shown in the illustration below.
Disconnect the coaxial cable from the FILTER UNIT, and then remove the FILTER UNIT from the chassis.

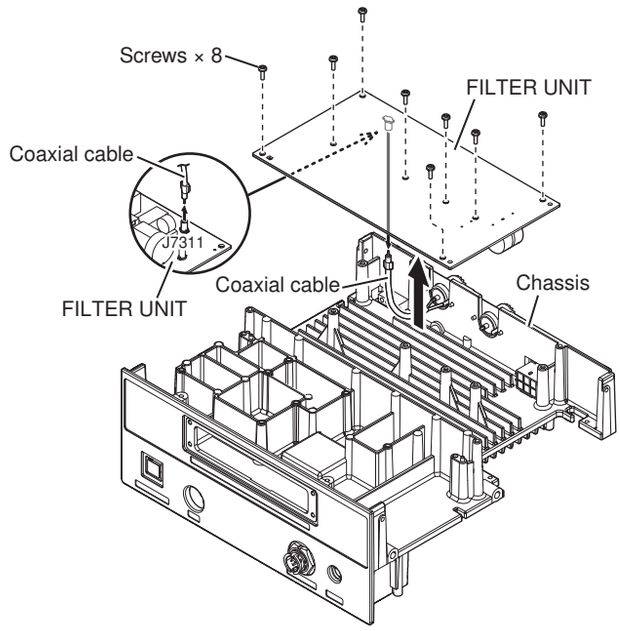

6. REMOVING LOGIC UNIT

1) Remove the 8 screws from the rear case of the remote controller.

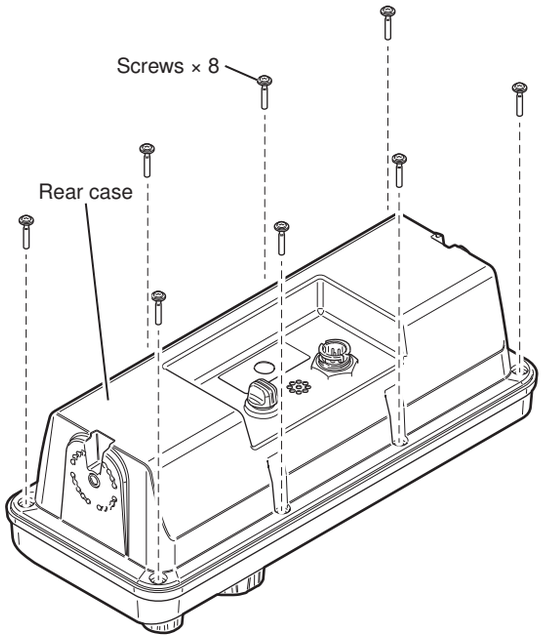

2) Separate the rear case from the front panel as shown in the illustration below.
Disconnect the data cable and the flat cable from the front panel, and then remove the rear case from the front panel.

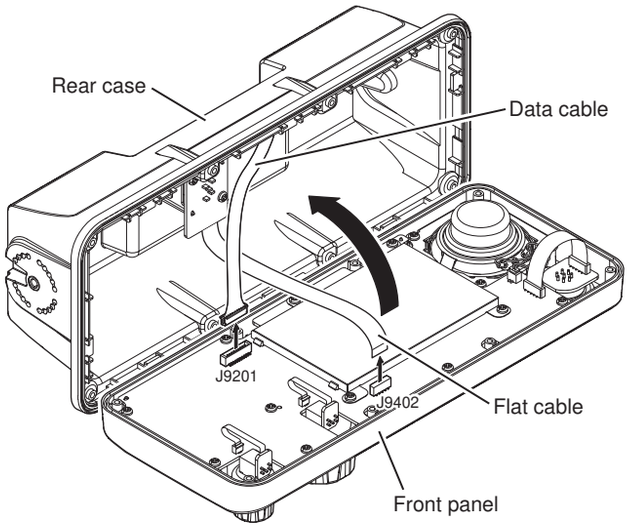

3) Disconnect the speaker cable and 3 flat cables from the LOGIC UNIT.

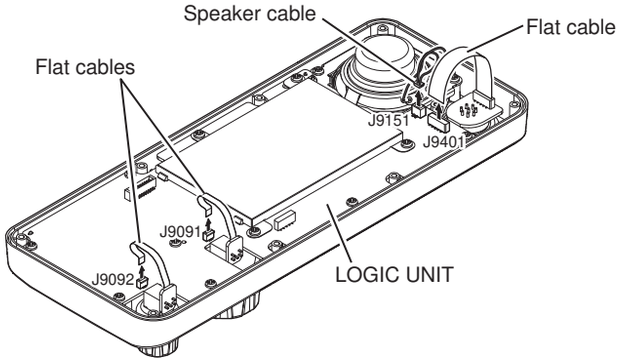

4) Remove the 11 screws from the LOGIC UNIT, and then remove the shield cover and LOGIC UNIT from the front panel.

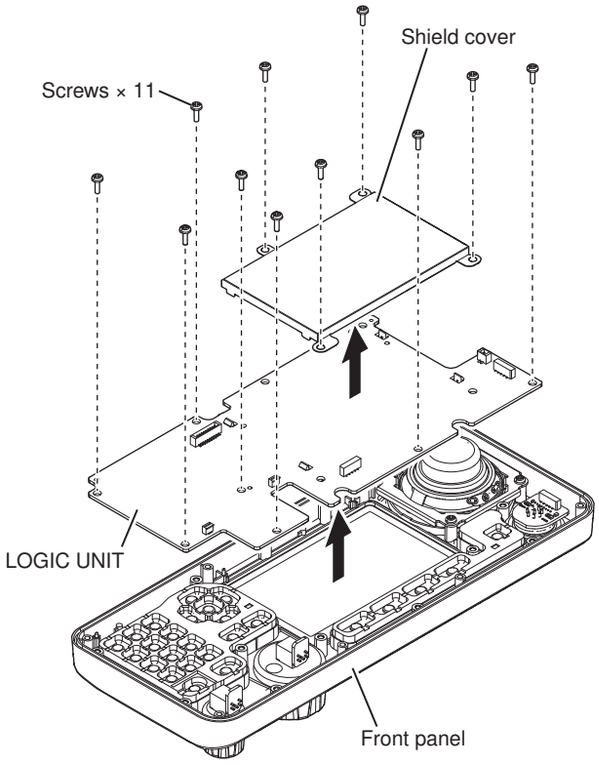

SECTION 4 INTERFACE INFORMATION

• REMOTE CONTROLLER

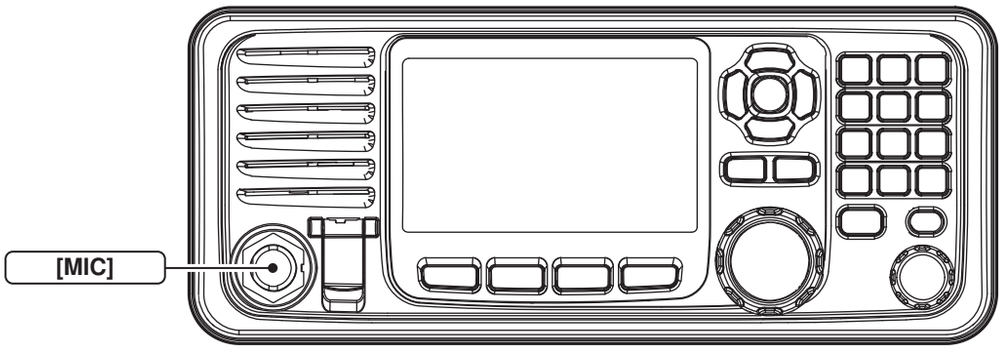

[MIC]

MIC	Pin number	Pin name	Description	Specification
8-pin 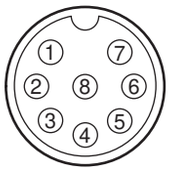 Front panel view	1	MIC+	Audio input from the microphone element.	Input impedance: 1.74 kΩ ±20%
	2	NC	No connection.	–
	3	AF1	Audio output related to the volume setting. Connected to pin 4 in the microphone.	–
	4	AF2	Audio input. Connected to pin 3 in the microphone.	–
	5	PTT	PTT switch input.	When grounded, transmits.
	6	GND	Ground terminal for transceiver.	–
	7	MIC–	Ground terminal for MIC+.	–
	8	AF–	Ground terminal for AF1 and AF2.	–

• TRANSCEIVER FRONT PANEL (1)

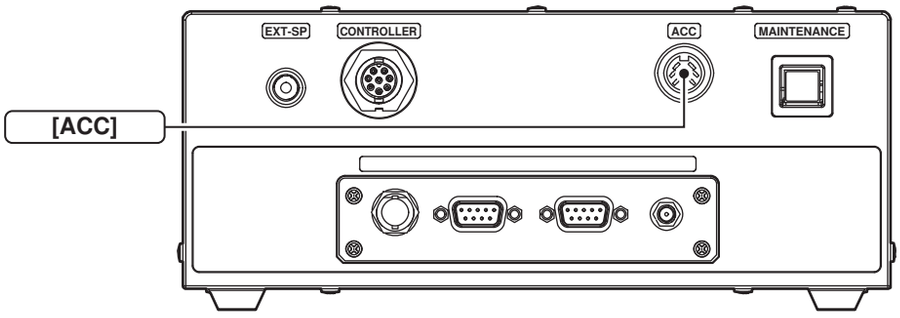

[ACC]

ACC	Pin number	Pin name	Description	Specification
8-pin Front panel view	1	CWK	CW and FSK keying input.	Input level: −0.5~+0.8 V
	2	AF GND	Ground terminal for AF.	–
	3	SEND	Input/Output terminal. Transmits when grounded.	Ground level: −0.5~+0.8 V Input current: Less than 20 mA
	4	MOD	Modulator input. - Usable when pin 3 is grounded.	Input impedance: More than 10 kΩ Input level: Approximately 100 mV rms
	5	AF	Audio detector output. - Fixed, regardless of [VOL] position.	Output impedance: Less than 4.7 kΩ Output level: 100~300 mV rms
	6	NC	No connection.	–
	7	13.6 V	13.6 V output when power is ON.	Output current: Less than 1 A
	8	ALC	ALC voltage input.	Control voltage: −3~0 V Input impedance: More than 10 kΩ

• TRANSCEIVER FRONT PANEL (2)

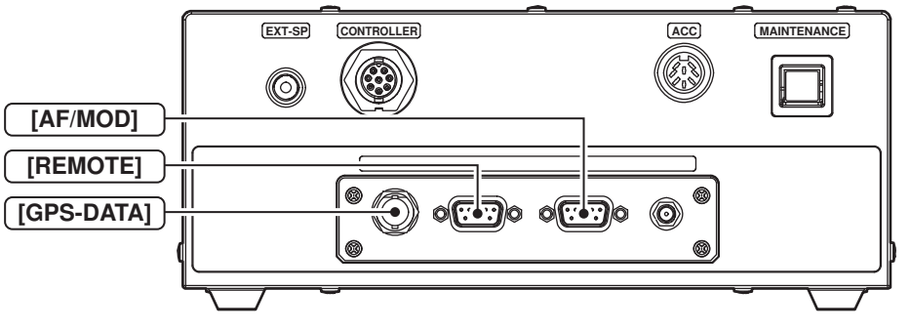

[AF/MOD]

AF/MOD	Pin number	Pin name	Description	Specification
9-pin (5, 1, 9, 6) Front panel view	1	MOD+	Modulation input from an external terminal unit.	Input impedance: More than 600 Ω Input level: Approximately 0.77 V rms
	2	MOD−	Ground terminal for MOD+.	–
	3	GND	Ground terminal for transceiver.	–
	4	AF+	Detected audio output for an external terminal unit.	Output impedance: More than 600 Ω Output level: Approximately 770 mV rms
	5	AF−	Ground terminal for AF+.	–
	6	GND	Ground terminal for transceiver.	–
	7	NC	This pin is not connected anywhere.	–
	8	SEND	Transmits when grounded.	Ground level: −0.5~+0.8 V Input current: Less than 20 mA
	9	GND	Ground terminal for transceiver.	–

[REMOTE]

REMOTE	Pin number	Pin name	Description
9-pin (5, 1, 9, 6) Front panel view	1	DCD	Carrier detection input.
	2	RXD	Receive data input.
		NMEA-OUT	NMEA0183 ver 4.10 data output.
	3	TXD	Transmit data output.
		NMEA-IN	NMEA0183 ver 4.10 data input.
	4	DTR	Terminal ready signal output.
	5	GND	Ground terminal for transceiver.
	6	DSR	Data-set-ready signal input.
	7	RTS	Request-to-send data output.
	8	CTS	Clear-to-send data input.
	9	NC	No connection.

[GPS-DATA]

GPS-DATA	Pin number	Pin name	Description
BNC (1, 2) Front panel view	1	NMEA ⊕	NMEA0183 ver 4.10 data input.
	2	NMEA ⊖	Ground for NMEA ⊕.

• TRANSCEIVER REAR PANEL

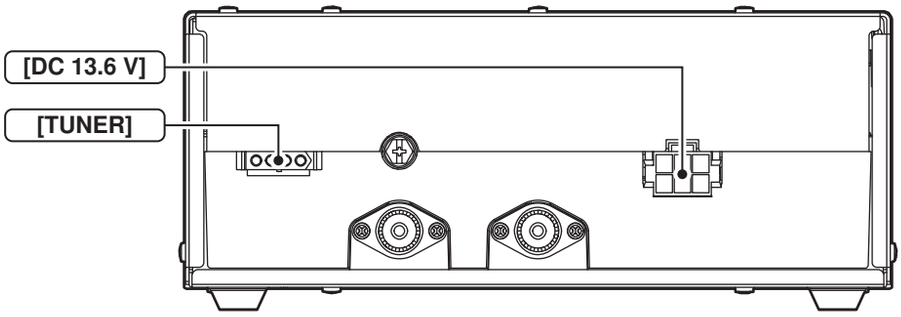

[TUNER]

TUNER	Pin number	Pin name	Description	Specification
Rear panel view	1	KEY	Key signal input.	While tuning: −0.5~+0.8 V
	2	START	Start/Through signal output.	Pulled up 8 V, 0 V (100 msec) as a start signal.
	3	13.6 V	13.6 V output.	Maximum current: 2 A
	4	E	Ground terminal for above signals.	–

[DC 13.6 V]

DC 13.6 V	Pin number	Pin name	Description	Specification
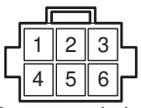 Rear panel view	1~3	⊕	DC input ⊕.	Maximum power consumption: 30 A typical.
	4~6	⊖	DC input ⊖.	–

SECTION 5 ADJUSTMENT PROCEDURE

5-1 PREPARATION

REQUIRED EQUIPMENT

EQUIPMENT	GRADE AND RANGE	EQUIPMENT	GRADE AND RANGE
DC power supply #1	Output voltage: 13.6 V ±15% Current capacity: 30 A or more	AC millivoltmeter	Measuring range: 10 mV to 10 V
DC power supply #2	Output voltage: 3.0 V Current capacity: 1 mA or more	Digital multimeter	Measuring range: 0.1 µA to 1 mA
RF power meter (50 Ω terminated)	Measuring range: 1 ~ 150 W Frequency range: 0.1 ~ 30 MHz SWR: Less than 1.2 : 1	Standard signal generator (SSG)	Frequency range: 0.1 ~ 30.000000 MHz Output level: −20 to 100 dBµ (−127 to −7 dBm)
Audio generator (AG)	Frequency range: 300 ~ 3000 Hz Output level: 1 ~ 500 mV	Dummy Load	Impedance: 100 Ω (VSWR 2:1) Capacity: More than 150 W

CONNECTIONS

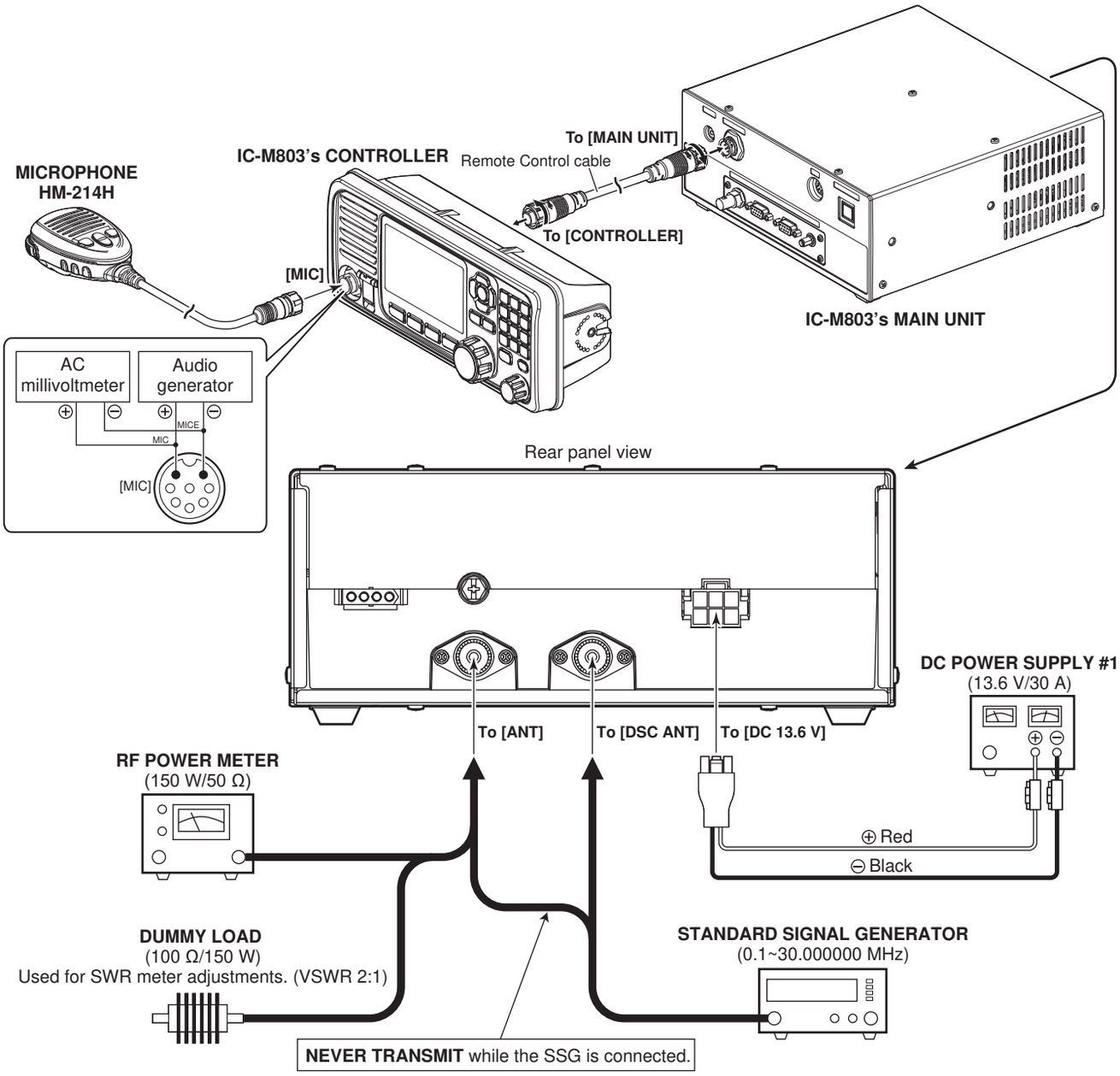

ENTERING THE I/O VERIFICATION MODE

1. Turn OFF the power.
2. While holding down all [DISTRESS], [SOFT KEY 1], and [►], turn ON the transceiver power to enter the I/O verification mode.

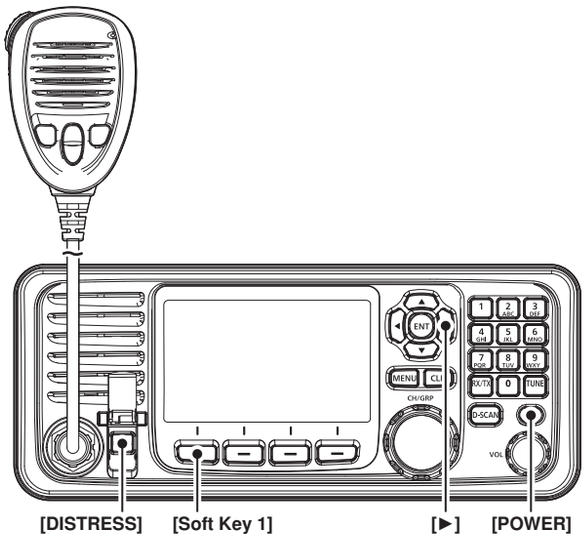

REMOTE CONTROLLER AND MICROPHONE OPERATION VERIFICATION

1. Enter the I/O verification mode.
2. Push [▲], and verify the LCD screen changes in order of maximum backlight, minimum backlight, black, red, green, and blue brightness.

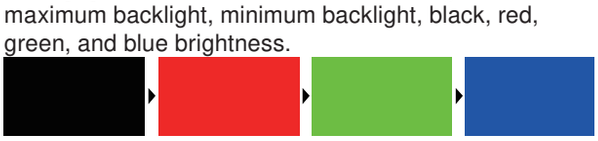

3. Push the corresponding key that is displayed on the screen (26 items).

4. Turn or push the corresponding dial that is displayed on the screen (6 items).

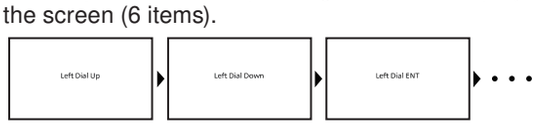

5. Push the corresponding microphone key that is displayed on the screen (5 items).

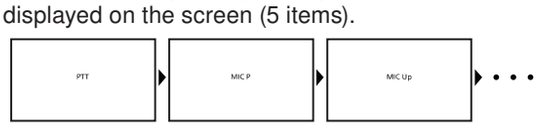

6. When all verifications are completed, “Complete” is displayed on the screen.

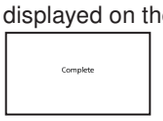

ENTERING THE ADJUSTMENT MODE

1. Turn OFF the power.
2. While holding down all (RX/TX), (TUNE), and [▼] on the HM-214H, turn ON the transceiver power to enter the adjustment mode.

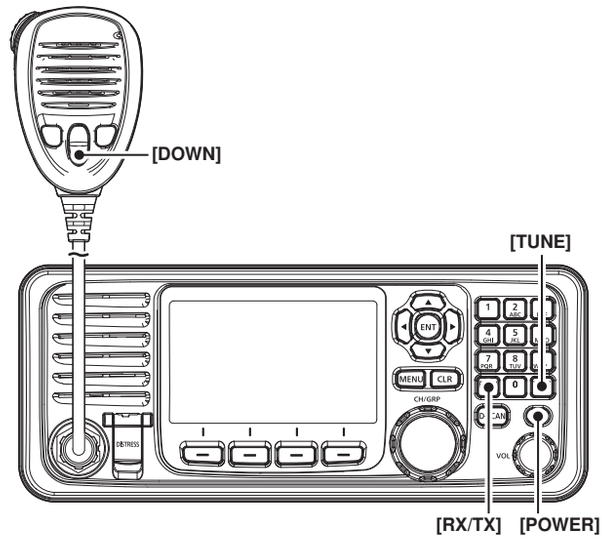

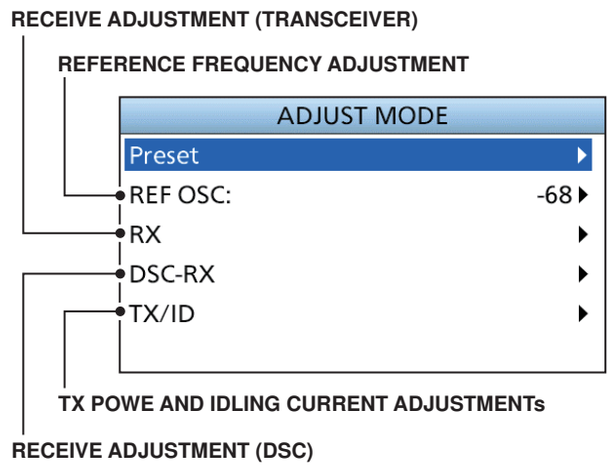

ADJUSTMENT MENU

KEY ASSIGNMENTS FOR THE ADJUST MODE

- Push [▲] or [▼] to select an adjustment item.
- Rotate [CH/GRP] to modify the adjustment value.
- Push (ENT) to store the adjustment value, and select the next adjustment item.
- Push [SOFT KEY 3] or [SOFT KEY 2] to select the next or previous adjustment item.
- Push [SOFT KEY 1] to return to the adjustment menu screen.

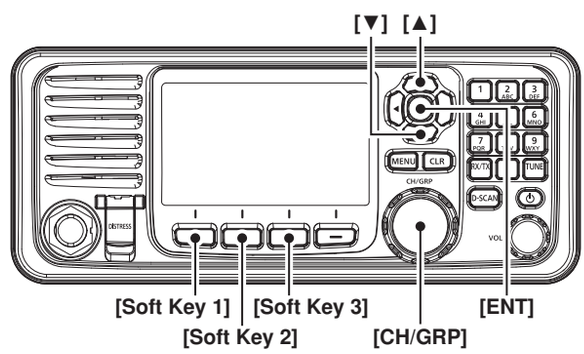

5-2 FREQUENCY ADJUSTMENT

Enter the adjustment mode.

ADJUSTMENT		ADJUSTMENT ITEM DISPLAY	SETTING CONDITION	OPERATION
REFERENCE FREQUENCY - Preparation -	1	–	• Three minutes have passed since the transceiver is turned ON.	Select the “REF OSC” item. (Adjustment menu: “REF OSC”)
- Adjustment -	2	“REF OSC”	• Connect the standard signal generator (SSG) to the [ANT] connector, and set it to: Frequency: 10.000000 MHz Level*: +94 dBμ (−13 dBm) Modulation: None • Receiving	Push (ENT). (Two beeps sound, then automatically moves to the Receive adjustment “Total Gain RX (REF).”)

*The output level of the standard signal generator (SSG) is measured at the load end (PD).

5-3 RECEIVE ADJUSTMENTS

ADJUSTMENT		ADJUSTMENT ITEM DISPLAY	SETTING CONDITION	OPERATION
TOTAL GAIN - Preparation -	1	–	–	Select the “Total Gain RX (REF)” item. (Adjustment menu: “RX” > “Total Gain RX (REF)”)
- Adjustment -	2	“Total Gain RX (REF)”	• Connect the SSG to the [ANT] connector, and set it to: Frequency: 12.354 MHz Level*: +50 dBμ (−57 dBm) Modulation: None • Receiving	Push (ENT). (Two seconds later, two beeps sound.)
	3	“Total Gain RX (SET)”	• Turn OFF the SSG output. • Receiving	Push (ENT). (Ten seconds later, two beeps sound.)
S-METER - Adjustment -	1	“8 Dot Level”	• Set the SSG as: Level*: +80 dBμ (−27 dBm) • Turn ON the SSG output. • Receiving	Push (ENT). (One second later, two beeps sound.)
DSC RECEIVER TOTAL GAIN - Preparation -	1	–	–	Select the “Total Gain DSC REF” item. (Adjustment menu: “DSC-RX” > “Total Gain DSC REF”)
- Adjustment -	2	“Total Gain DSC REF”	• Connect the SSG to the [DSC ANT] connector, and set it to: Frequency: 8.4145 MHz Level*: +50 dBμ (−57 dBm) Modulation: None • Receiving	Push (ENT). (Two seconds later, two beeps sound.)
	3	“Total Gain DSC SET”	• Turn OFF the SSG output. • Receiving	Push (ENT). (Ten seconds later, two beeps sound and then automatically returns to the adjustment menu.)

*The output level of the standard signal generator (SSG) is measured at the load end (PD).

5-4 TRANSMIT ADJUSTMENTS

ADJUSTMENT		ADJUSTMENT ITEM DISPLAY	SETTING CONDITION	OPERATION
IDLING **- Preparation -**	1	–	–	Select the “VDL IDL Set” item. (Adjustment menu: “TX/ID” > “ID” > “VDL IDL Set”)
- Adjustment -	2	“VDL IDL Set”	• Automatically transmits. (Automatically returns to receive when the beeps sound.)	Push (ENT). (Two beeps sound.)
	3	“Final 1 IDV (12M)”		Push (ENT). (Two seconds later, two beeps sound.)
	4	“Drive 1 IDV”		Push (ENT). (One second later, two beeps sound.)
	5	“Pre-Driver IDV”		Push (ENT). (Two beeps sound and then automatically moves to the Transmit power adjustment “TX Total HF Gain.”)
TX OUTPUT POWER (HF) **- Preparation -**	1	“TX Total HF Gain”	• Receiving • Connect the RF power meter to the [ANT] connector. • Connect the audio generator with the AC millivoltmeter to [MIC] connector, and set it to: Frequency: 1.5 kHz Waveform: Sine wave Level: 40 mV rms	Push (ENT).
- Adjustment -	2	“TX Total HF Gain”	• Automatically transmits.	Rotate [CH/GRP] to set the output power to 70 W, then push (ENT). (Two beeps sound.)
	3	“Power Tune (12M)”		Rotate [CH/GRP] to set the output power to 10 W, then push (ENT). (Two beeps sound.)
	4	“Power 20W (12M)”		Rotate [CH/GRP] to set the output power to 20 W, then push (ENT). (Two beeps sound.)
	5	“Power 60W (12M)”		Rotate [CH/GRP] to set the output power to 70 W, then push (ENT). (Two beeps sound.)
	6	“Power 100W (12M)”		Rotate [CH/GRP] to set the output power to 100 W, then push (ENT). (Two beeps sound.)
	7	“Power 150W (12M)”		Rotate [CH/GRP] to set the output power to 140 W, then push (ENT). (Two beeps sound.)
	8	“Power 150W (4M)”		
	9	“Power 150W (6M)”		
	10	“Power 150W (8M)”		
	11	“Power 150W (16M)”		
	12	“Power 150W (18M)”		
	13	“Power 150W (22M)”		
	14	“Power 150W (25M)”		
	15	“Power 150W (27M)”		Rotate [CH/GRP] to set the output power to 130 W, then push (ENT). (Two beeps sound, and then returns to receive.)

Continued on the next page...

5-4 TRANSMIT ADJUSTMENTS (CONTINUED)

ADJUSTMENT		ADJUSTMENT ITEM DISPLAY	SETTING CONDITION	OPERATION
TX OUTPUT POWER (MF) - Adjustment -	1	"TX Total MF Gain"	• Receiving	Push (ENT).
	2	"TX Total MF Gain"	• Automatically transmits.	Rotate [CH/GRP] to set the output power to 70 W, then push (ENT). (Two beeps sound.)
	3	"Power Tune (2.1M)"		Rotate [CH/GRP] to set the output power to 10 W, then push (ENT). (Two beeps sound.)
	4	"Power 20W (2.1M)"		Rotate [CH/GRP] to set the output power to 20 W, then push (ENT). (Two beeps sound.)
	5	"Power 60W (2.1M)"		Rotate [CH/GRP] to set the output power to 70 W, then push (ENT). (Two beeps sound.)
	6	"Power 100W (2.1M)"		Rotate [CH/GRP] to set the output power to 100 W, then push (ENT). (Two beeps sound.)
	7	"Power 150W (2.1M)"		Rotate [CH/GRP] to set the output power to 140 W, then push (ENT). (Two beeps sound, and then automatically moves to the ALC adjustment "ALC.")
	8	"Power 150W (1.6M)"		
ALC - Adjustment -	1	"ALC"	• Automatically transmits.	Push (ENT). (Three seconds later, two beeps sound and then automatically enters to the Drive gain adjustment "Drive Min (12M)" mode.)
DRIVE GAIN - Adjustment -	1	"Drive Min (12M)"	• Automatically transmits.	Push (ENT). (Ten seconds later, two beeps sound and then automatically moves to the SWR adjustment "SWR2.")
SWR - Preparation -	If a 100 Ω dummy load (or a dummy load with VSWR of 2:1) is unavailable, skip this adjustment.			
	1	"SWR2"	• Connect the 100 Ω dummy load to the [ANT] connector.	–
- Adjustment -	2	"SWR2"	• Automatically transmits.	Push (ENT). (Three seconds later, two beeps sound and then automatically moves to the Id APC adjustment "ID-APC Check.")
Id APC - Adjustment -	1	"ID-APC Check"	• Automatically transmits. (Automatically returns to receive when the beeps sound.)	Push (ENT). (Two seconds later, two beeps sound and then automatically returns to the adjustment menu.)

5-5 BACKUP BATTERY FLOWING CURRENT VERIFICATION

1. Turn OFF the transceiver's power.
2. Remove the top cover. (Refer to DISASSEMBLY INSTRUCTIONS in SECTION 3.)
3. Remove the backup battery (BT5081) from J5081 on the MAIN UNIT.
4. Apply 3.0 V DC to the point in the illustration shown below, through the digital multimeter.
5. Verify that the current value indicated on the digital multimeter is less than 0.8 µA.
6. Insert the backup battery into J5081 on the MAIN UNIT, and then attach the top cover.

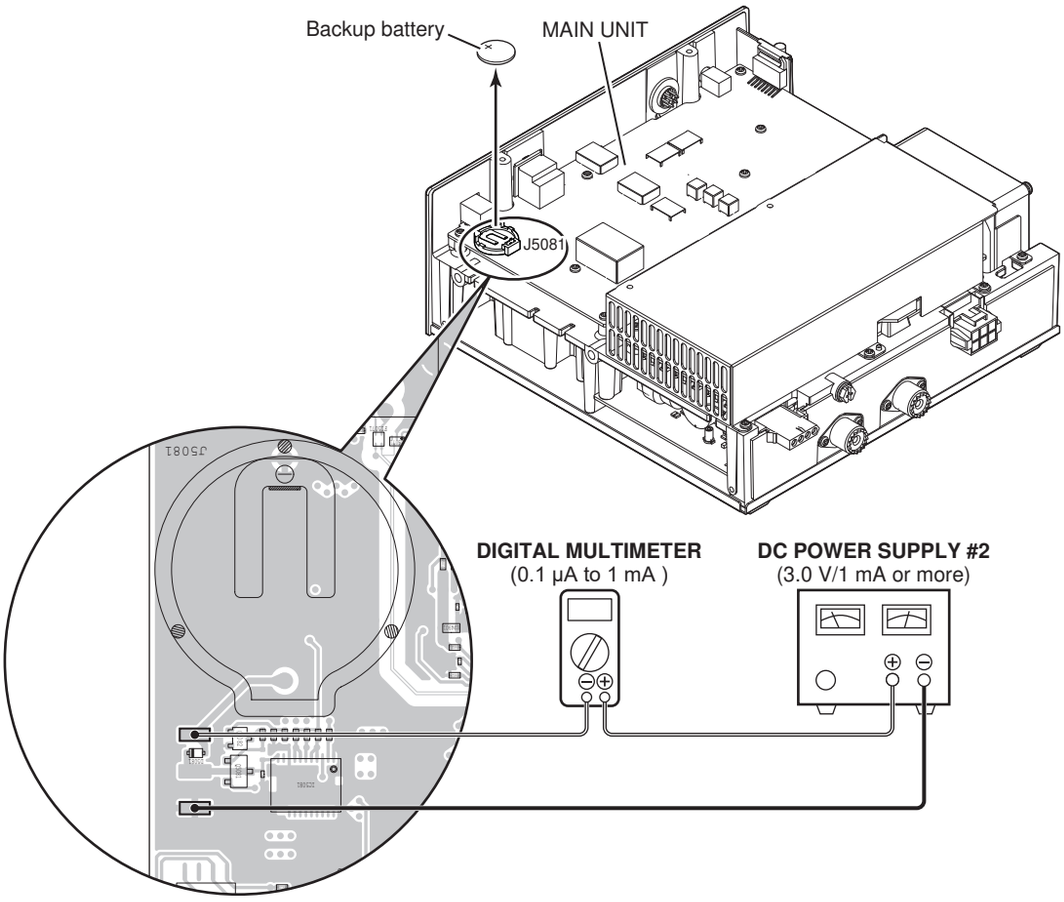

5-6 DSC SELF CHECK TEST

The Self Check test sends DSC signals to the receiving AF circuit to compare the sending and receiving signals at the AF level.

1. Open "Self Check Test."
   [[MENU] > DSC Settings > Self Check Test]
2. Push (ENT), or to start the Self Check Test.

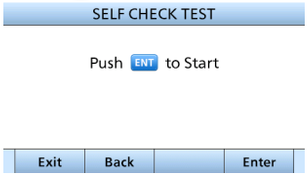

3. When the sending and receiving DSC signals match, "OK" is displayed.

SECTION 6 PARTS LIST

[MAIN UNIT]

REF NO.	PART NO.	DESCRIPTION		M.	H/V LOCATION
IC4001	1110008540	S.IC	62783G-S18-R	T	130.5/111.3
IC4002	1110008540	S.IC	62783G-S18-R	T	118.3/111.8
IC4021	1110008550	S.IC	NJM2904CRB1-TE1-#HMZR	T	107.6/109.1
IC4022	1110008550	S.IC	NJM2904CRB1-TE1-#HMZR	T	107.6/104.3
IC4051	1130018870	S.IC	TC7WH14FKLJ	T	99.8/27.2
IC4061	1110006921	S.IC	S-80845CNMC-B86T2G	T	176.8/102.7
IC4071	1130018870	S.IC	TC7WH14FKLJ	T	188.1/104.4
IC4072	1110005140	S.IC	NJM3403AV-TE1-#ZZZB	T	156.7/101.2
IC4261	6910027620	S.DC	TPS54418RTER	T	179.4/70.4
IC4262	1130007021	S.IC	TC7S66FU (TE85LF)	T	183.1/82.6
IC4321	1180004970	S.REG	XC6222D251MR-G	T	174.6/87.0
IC4331	1180004740	S.REG	S-1313D33-M5T1U3	T	180.0/92.6
IC4341	1180004740	S.REG	S-1313D33-M5T1U3	T	174.6/91.9
IC4361	1180004430	S.REG	XC6209F502MR-G	T	117.6/18.5
IC4371	1180004800	S.REG	XC6222D181MR-G	T	184.2/92.6
IC4381	6910028150	S.DC	ADP5075ACBZ-R7	T	115.9/12.5
IC4401	1110007400	S.IC	BGA616	T	4.8/82.1
IC4661	1110007400	S.IC	BGA616	T	73.5/49.8
IC4662	1180004430	S.REG	XC6209F502MR-G	T	105.1/44.6
IC4901	1140018901	S.IC	STM32F429IGT6	T	177.2/45.5
IC4902	1130018050	S.IC	SN74AHCT367PWR	T	151.4/40.2
IC5001	1130019460	S.IC	GT24C256A-2ZLI-TR	T	173.9/25.2
IC5011	1110005771	S.IC	S-80942CNMC-G9CT2G	T	191.4/23.0
IC5051	1130016460	S.IC	R2A20169SA	T	144.5/102.0
IC5061	1130017400	S.IC	MC74HC4094ADTR2G	T	131.9/100.8
IC5062	1130017400	S.IC	MC74HC4094ADTR2G	T	68.7/84.4
IC5063	1130017400	S.IC	MC74HC4094ADTR2G	T	79.2/86.2
IC5064	1130017400	S.IC	MC74HC4094ADTR2G	T	72.5/115.5
IC5081	1130011551	S.IC	RX-4581NB-F	T	205.9/45.7
IC5101	1140018370	S.IC	5CEFA9F23I7N	T	144.6/77.0
IC5102	6910024650	S.IC	74LVC2G17GW125	T	202.5/108.4
IC5103	6910024650	S.IC	74LVC2G17GW125	T	198.2/108.4
IC5104	1130018770	S.IC	S25FL127SABMFI100	T	214.9/57.2
IC5161	1180004430	S.REG	XC6209F502MR-G	T	94.3/103.2
IC5181	1110009190	S.IC	LTC6401IUD-20#TRPBF	T	105.5/80.3
IC5201	1190005200	S.IC	AD9645BCPZRL7-80	T	125.2/85.9
IC5241	1110009190	S.IC	LTC6401IUD-20#TRPBF	T	105.7/91.8
IC5281	1190004630	S.IC	ISL5961IAZ	T	123.7/69.7
IC5401	1130019760	S.IC	IPS6404L-SQ-SPN	T	145.1/55.3
IC5441	1130012160	S.IC	SN74LVC1GU04DCKR	T	117.8/54.4
IC5451	1130017950	S.IC	SN65LVDS1DBVR	T	116.4/58.8
IC5461	1130014260	S.IC	SN74LVC2GU04DCKR	T	123.4/58.5
IC5491	1130012160	S.IC	SN74LVC1GU04DCKR	T	123.9/54.4
IC5501	1110007930	S.IC	PCM1681PWPR	T	88.8/32.6
IC5502	1110008890	S.IC	NJU7056F3-TE2-#ZZZH	T	56.3/24.5
IC5521	1110006570	S.IC	TS462CPT	T	56.9/37.4
IC5541	1110004050	S.IC	NJM3404AV-TE1-#FMZB	T	133.8/6.4
IC5561	1110008550	S.IC	NJM2904CRB1-TE1-#HMZR	T	112.6/49.5
IC5581	1110008550	S.IC	NJM2904CRB1-TE1-#HMZR	T	105.3/60.6
IC5601	1110009480	IC	STA540-HF		
IC5621	1190004280	S.IC	PCM1802DBR	T	73.1/32.5
IC5651	1130009981	S.IC	TC7W53FK (TE85LF)	T	58.2/18.5
IC5661	1130009981	S.IC	TC7W53FK (TE85LF)	T	178.5/16.0
IC5681	1130009981	S.IC	TC7W53FK (TE85LF)	T	58.2/11.8
IC5911	1110005610	S.IC	NJM2058V-TE1-#ZZZB	T	204.6/89.7
IC5921	1110005610	S.IC	NJM2058V-TE1-#ZZZB	T	195.7/89.7
Q4021	1590005220	S.TRA	LDTA114YET1G	T	123.1/100.3
Q4022	1590004690	S.TRA	LDTC143ZET1G	T	125.6/100.3
Q4023	1590004690	S.TRA	LDTC143ZET1G	T	125.6/98.2
Q4061	1530004140	S.TRA	L2SC4081RT1G	T	179.9/103.0
Q4062	1590005220	S.TRA	LDTA114YET1G	T	176.9/110.9
Q4063	1550000241	S.FET	TPCF8107LF	T	177.9/107.4
Q4071	1590004690	S.TRA	LDTC143ZET1G	T	183.9/104.9
Q4072	1590005220	S.TRA	LDTA114YET1G	T	183.9/107.5
Q4073	1530004140	S.TRA	L2SC4081RT1G	T	165.2/101.7
Q4141	1530004140	S.TRA	L2SC4081RT1G	T	143.5/10.2
Q4142	1530004140	S.TRA	L2SC4081RT1G	T	175.2/11.4
Q4161	1590005220	S.TRA	LDTA114YET1G	T	146.3/10.1
Q4162	1530004620	S.TRA	2SCR553P5T100	T	146.5/6.6
Q4341	1560002210	S.FET	RE1J002YNTCL	T	170.4/81.9
Q4342	1590005220	S.TRA	LDTA114YET1G	T	175.0/94.8
Q4401	1590005220	S.TRA	LDTA114YET1G	T	19.2/54.7
Q4402	1590004690	S.TRA	LDTC143ZET1G	T	19.2/52.2
Q4421	1530003091	S.TRA	2SC4213-B (TE85RF)	T	10.4/57.0
Q4422	1590005220	S.TRA	LDTA114YET1G	T	17.1/54.7
Q4423	1590004690	S.TRA	LDTC143ZET1G	T	15.0/54.7
Q4424	1590004690	S.TRA	LDTC143ZET1G	T	15.0/52.2
Q4426	1590004690	S.TRA	LDTC143ZET1G	T	21.3/52.2
Q4427	1590005220	S.TRA	LDTA114YET1G	T	21.3/54.7
Q4631	1590005220	S.TRA	LDTA114YET1G	T	106.1/51.5
Q4632	1590004690	S.TRA	LDTC143ZET1G	T	106.1/48.9
Q4641	1530004560	S.TRA	2SC3356G-B-AE2-R	T	73.5/68.2
Q4642	1590005220	S.TRA	LDTA114YET1G	T	100.9/54.5
Q4643	1590005220	S.TRA	LDTA114YET1G	T	106.1/54.5
Q4644	1590004690	S.TRA	LDTC143ZET1G	T	104.1/54.5
Q4661	1590005220	S.TRA	LDTA114YET1G	T	104.1/51.5
Q4662	1590005220	S.TRA	LDTA114YET1G	T	100.8/51.5
Q4663	1590004690	S.TRA	LDTC143ZET1G	T	104.1/48.9
Q4701	1590004690	S.TRA	LDTC143ZET1G	T	12.7/99.0
Q4702	1530004140	S.TRA	L2SC4081RT1G	T	13.9/96.3
Q4871	1590005220	S.TRA	LDTA114YET1G	T	113.3/97.8
Q4872	1590004690	S.TRA	LDTC143ZET1G	T	116.9/97.8
Q4881	1530004560	S.TRA	2SC3356G-B-AE2-R	T	80.5/109.0
Q4882	1590005220	S.TRA	LDTA114YET1G	T	113.3/93.3
Q4883	1590005220	S.TRA	LDTA114YET1G	T	113.3/95.3
Q4884	1590004690	S.TRA	LDTC143ZET1G	T	116.9/95.3

Eqv.= This component is equivalent to the REF No. component listed above, and may be substituted on parts orders and repairs.

[MAIN UNIT]

REF NO.	PART NO.	DESCRIPTION		M.	H/V LOCATION
Q5041	1590004690	S.TRA	LDTC143ZET1G	T	158.5/50.4
Q5042	1530004140	S.TRA	L2SC4081RT1G	T	155.8/51.1
Q5081	1510000502	S.TRA	2SA1162-GRLF	T	212.0/44.5
Q5082	1530004140	S.TRA	L2SC4081RT1G	T	211.9/41.5
Q5421	1530004590	S.TRA	BFR193F H6327	T	118.8/48.2
Q5422	1510001270	S.TRA	2SAR502UBTL	T	120.1/50.7
Q5481	1530004590	S.TRA	BFR193F H6327	T	124.7/48.2
Q5482	1510001270	S.TRA	2SAR502UBTL	T	126.0/50.7
Q5581	1530004140	S.TRA	L2SC4081RT1G	T	99.3/58.5
Q5582	1530004140	S.TRA	L2SC4081RT1G	T	109.7/57.2
Q5651	1590004690	S.TRA	LDTC143ZET1G	T	54.5/18.8
Q5661	1590004690	S.TRA	LDTC143ZET1G	T	181.5/18.7
Q5681	1590004690	S.TRA	LDTC143ZET1G	T	54.5/12.1
Q5901	1590005220	S.TRA	LDTA114YET1G	T	209.4/81.0
Q5902	1550000610	S.FET	RU1L002SNTL	T	209.6/78.7
Q5911	1530004140	S.TRA	L2SC4081RT1G	T	209.5/83.4
Q5931	1590005220	S.TRA	LDTA114YET1G	T	199.2/82.8
Q5932	1590004690	S.TRA	LDTC143ZET1G	T	199.6/76.8
Q5981	1510001270	S.TRA	2SAR502UBTL	T	203.5/79.6
D4021	1750001810	S.DIO	L1SS400T1G	T	109.7/101.4
D4023	1750001820	S.DIO	LRB706F-40T1G	T	119.8/100.1
D4024	1750001820	S.DIO	LRB706F-40T1G	T	119.8/102.6
D4035	1750001810	S.DIO	L1SS400T1G	T	103.5/102.1
D4071	1750001820	S.DIO	LRB706F-40T1G	T	187.1/107.2
D4072	1750001820	S.DIO	LRB706F-40T1G	T	185.5/100.9
D4074	1750001820	S.DIO	LRB706F-40T1G	T	137.7/104.8
D4101	1750001820	S.DIO	LRB706F-40T1G	T	191.7/15.6
D4102	1750001820	S.DIO	LRB706F-40T1G	T	173.7/100.3
D4103	1750001820	S.DIO	LRB706F-40T1G	T	171.2/100.3
D4141	1750001810	S.DIO	L1SS400T1G	T	146.9/13.0
D4142	1750001810	S.DIO	L1SS400T1G	T	171.6/9.2
D4383	1750002110	S.DIO	LRB551V-30T1G	T	114.5/4.5
D4401	1790001622	S.DIO	1SV308L3F	T	8.7/82.7
D4421	1790001622	S.DIO	1SV308L3F	T	10.4/69.0
D4434	1750003040	S.DIO	L709CEAR	T	5.4/59.9
D4435	1750003040	S.DIO	L709CEAR	T	5.4/57.2
D4451	1790001622	S.DIO	1SV308L3F	T	17.4/79.9
D4452	1790001622	S.DIO	1SV308L3F	T	17.4/64.1
D4471	1790001622	S.DIO	1SV308L3F	T	22.0/85.6
D4472	1790001622	S.DIO	1SV308L3F	T	22.0/64.1
D4491	1790001622	S.DIO	1SV308L3F	T	26.6/85.6
D4492	1790001622	S.DIO	1SV308L3F	T	26.7/64.1
D4511	1790001622	S.DIO	1SV308L3F	T	32.7/85.6
D4512	1790001622	S.DIO	1SV308L3F	T	32.7/64.1
D4531	1790001622	S.DIO	1SV308L3F	T	38.8/85.6
D4532	1790001622	S.DIO	1SV308L3F	T	38.8/64.1
D4551	1790001622	S.DIO	1SV308L3F	T	44.9/85.6
D4552	1790001622	S.DIO	1SV308L3F	T	44.9/64.1
D4571	1790001622	S.DIO	1SV308L3F	T	49.4/85.6
D4572	1790001622	S.DIO	1SV308L3F	T	49.4/64.1
D4591	1790001622	S.DIO	1SV308L3F	T	53.9/85.6
D4592	1790001622	S.DIO	1SV308L3F	T	54.0/63.2
D4611	1790001622	S.DIO	1SV308L3F	T	59.2/85.6
D4612	1790001622	S.DIO	1SV308L3F	T	59.3/63.2
D4631	1790001622	S.DIO	1SV308L3F	T	69.6/60.0
D4632	1790001622	S.DIO	1SV308L3F	T	84.9/57.8
D4641	1790001622	S.DIO	1SV308L3F	T	69.6/65.1
D4642	1790001622	S.DIO	1SV308L3F	T	84.9/68.1
D4643	1750001810	S.DIO	L1SS400T1G	T	102.5/54.6
D4661	1790001622	S.DIO	1SV308L3F	T	68.1/60.0
D4662	1750003070	S.DIO	BAP70Q	T	69.2/54.2
D4663	1750003070	S.DIO	BAP70Q	T	78.2/52.6
D4664	1750003070	S.DIO	BAP70Q	T	87.9/52.6
D4665	1750001810	S.DIO	L1SS400T1G	T	102.5/51.4
D4666	1790001622	S.DIO	1SV308L3F	T	92.0/52.2
D4701	1750003040	S.DIO	L709CEAR	T	10.9/106.8
D4702	1750003040	S.DIO	L709CEAR	T	13.6/106.8
D4703	1750001820	S.DIO	LRB706F-40T1G	T	16.6/108.5
D4704	1750001810	S.DIO	L1SS400T1G	T	12.3/101.6
D4731	1790001622	S.DIO	1SV308L3F	T	18.5/91.7
D4732	1790001622	S.DIO	1SV308L3F	T	20.4/115.4
D4751	1790001622	S.DIO	1SV308L3F	T	25.9/91.7
D4752	1790001622	S.DIO	1SV308L3F	T	26.5/114.8
D4771	1790001622	S.DIO	1SV308L3F	T	33.5/91.7
D4772	1790001622	S.DIO	1SV308L3F	T	33.6/113.5
D4791	1790001622	S.DIO	1SV308L3F	T	41.0/91.7
D4792	1790001622	S.DIO	1SV308L3F	T	41.0/115.9
D4811	1790001622	S.DIO	1SV308L3F	T	49.2/90.5
D4812	1790001622	S.DIO	1SV308L3F	T	49.2/115.2
D4841	1790001622	S.DIO	1SV308L3F	T	57.0/90.5
D4842	1790001622	S.DIO	1SV308L3F	T	56.8/115.2
D4871	1790001622	S.DIO	1SV308L3F	T	71.6/110.2
D4872	1790001622	S.DIO	1SV308L3F	T	71.6/97.6
D4881	1790001622	S.DIO	1SV308L3F	T	77.0/110.2
D4882	1750001810	S.DIO	L1SS400T1G	T	115.9/92.8
D4883	1790001622	S.DIO	1SV308L3F	T	81.5/97.6
D5071	1750003410	S.ZEN	RCLAMP7524T.TNT	T	197.7/14.8
D5081	1750001810	S.DIO	L1SS400T1G	T	215.8/42.8
D5161	1750003070	S.DIO	BAP70Q	T	88.1/71.7
D5221	1750003070	S.DIO	BAP70Q	T	90.1/99.1
D5901	1750001810	S.DIO	L1SS400T1G	T	205.6/79.4
D5921	1750001810	S.DIO	L1SS400T1G	T	193.7/80.5
D5941	1750001810	S.DIO	L1SS400T1G	T	200.7/96.8
D5951	1750001810	S.DIO	L1SS400T1G	T	209.4/97.9
D5961	1750001810	S.DIO	L1SS400T1G	T	191.0/96.8
D5962	1750001810	S.DIO	L1SS400T1G	T	192.2/96.8

M.= Mounted side (T: Mounted on the Top side, B: Mounted on the Bottom side)
H/V LOCATION=See the BOARD LAYOUTS for details.

[MAIN UNIT]

REF NO.	PART NO.	DESCRIPTION		M.	H/V LOCATION
D5963	1750001810	S.DIO	L1SS400T1G	T	195.7/97.2
D5971	1750001810	S.DIO	L1SS400T1G	T	199.3/98.7
FI5071	4580000260	S.FIL	EXC24CF900U	T	199.4/14.6
X4921	6050014950	S.XTA	CR-1084 (9.8304 MHz)	T	159.8/40.6
X5421	6050014940	S.XTA	CR-1083 (73.728 MHz)	T	118.7/43.7
X5481	6050014930	S.XTA	CR-1082 (24.576 MHz)	T	124.3/42.7
L4071	6200017540	S.COI	NLV25T-101J-EF	T	171.5/116.2
L4072	6200017540	S.COI	NLV25T-101J-EF	T	148.8/110.0
L4075	6200017540	S.COI	NLV25T-101J-EF	T	138.0/110.0
L4076	6200017540	S.COI	NLV25T-101J-EF	T	152.6/110.0
L4141	6200017540	S.COI	NLV25T-101J-EF	T	148.1/16.0
L4144	6200017540	S.COI	NLV25T-101J-EF	T	171.5/11.6
L4182	6200017700	S.COI	NLV32T-221J-EF	T	33.0/36.8
L4183	6200017700	S.COI	NLV32T-221J-EF	T	36.0/36.8
L4261	6200016430	S.COI	VLS5045EX-3R3N	T	172.8/70.6
L4282	6200015100	S.COI	MLP2520S100MT	T	104.3/15.5
L4381	6200016400	S.COI	VLS5045EX-6R8M	T	115.5/8.1
L4401	6200017740	S.COI	NLV25T-R18J-EF	T	6.1/74.8
L4402	6200010740	S.COI	C2520C-R27G-A	T	4.9/78.2
L4403	6200017800	S.COI	NLV25T-220J-EF	T	2.3/82.4
L4411	6200017540	S.COI	NLV25T-101J-EF	T	8.2/79.5
L4421	6200017830	S.COI	NLV25T-820J-EF	T	8.6/64.0
L4422	6200017650	S.COI	NLV25T-4R7J-EF	T	4.1/63.0
L4423	6200017780	S.COI	NLV25T-3R9J-EF	T	3.4/66.1
L4424	6200017540	S.COI	NLV25T-101J-EF	T	12.4/67.3
L4425	6200017540	S.COI	NLV25T-101J-EF	T	13.0/78.1
L4426	6200010670	S.COI	C2520C-R18G-A (0.18U)	T	12.4/83.5
L4427	6200010740	S.COI	C2520C-R27G-A	T	16.1/82.9
L4428	6200017540	S.COI	NLV25T-101J-EF	T	19.3/86.0
L4451	6200017540	S.COI	NLV25T-101J-EF	T	18.5/77.4
L4452	6200017770	S.COI	NLV25T-5R6J-EF	T	17.6/74.5
L4453	6200017650	S.COI	NLV25T-4R7J-EF	T	18.5/71.5
L4454	6200017540	S.COI	NLV25T-101J-EF	T	18.5/66.6
L4471	6200017540	S.COI	NLV25T-101J-EF	T	23.1/83.1
L4472	6200017650	S.COI	NLV25T-4R7J-EF	T	22.2/80.2
L4473	6200017640	S.COI	NLV25T-3R3J-EF	T	23.1/76.8
L4474	6200017640	S.COI	NLV25T-3R3J-EF	T	23.1/71.5
L4475	6200017770	S.COI	NLV25T-5R6J-EF	T	23.1/66.6
L4491	6200017540	S.COI	NLV25T-101J-EF	T	27.7/83.1
L4492	6200017610	S.COI	NLV25T-2R2J-EF	T	26.8/80.2
L4493	6200017610	S.COI	NLV25T-2R2J-EF	T	27.7/76.8
L4494	6200017610	S.COI	NLV25T-2R2J-EF	T	27.7/71.5
L4495	6200017600	S.COI	NLV25T-1R8J-EF	T	27.7/66.6
L4511	6200017540	S.COI	NLV25T-101J-EF	T	33.8/83.2
L4512	6200017820	S.COI	NLV25T-1R5J-EF	T	32.9/80.2
L4513	6200017820	S.COI	NLV25T-1R5J-EF	T	33.8/76.8
L4514	6200017600	S.COI	NLV25T-1R8J-EF	T	33.8/71.7
L4515	6200017590	S.COI	NLV25T-1R2J-EF	T	33.8/66.6
L4531	6200017540	S.COI	NLV25T-101J-EF	T	39.9/83.2
L4532	6200017580	S.COI	NLV25T-1R0J-EF	T	39.0/80.2
L4533	6200017580	S.COI	NLV25T-1R0J-EF	T	39.9/76.8
L4534	6200017580	S.COI	NLV25T-1R0J-EF	T	39.9/71.7
L4535	6200017560	S.COI	NLV25T-R82J-EF	T	39.9/66.6
L4551	6200017540	S.COI	NLV25T-101J-EF	T	46.0/83.2
L4552	6200017560	S.COI	NLV25T-R82J-EF	T	45.1/80.2
L4553	6200017760	S.COI	NLV25T-R68J-EF	T	46.0/76.8
L4554	6200017760	S.COI	NLV25T-R68J-EF	T	46.0/71.7
L4555	6200017760	S.COI	NLV25T-R68J-EF	T	46.0/66.6
L4571	6200017540	S.COI	NLV25T-101J-EF	T	50.5/83.1
L4572	6200017760	S.COI	NLV25T-R68J-EF	T	49.6/80.2
L4573	6200017670	S.COI	NLV25T-R47J-EF	T	50.5/76.8
L4574	6200017670	S.COI	NLV25T-R47J-EF	T	50.5/71.7
L4575	6200017750	S.COI	NLV25T-R56J-EF	T	50.5/66.6
L4591	6200017540	S.COI	NLV25T-101J-EF	T	55.0/83.1
L4592	6200010960	S.COI	C2520C-R47G-A (0.47U)	T	54.6/79.8
L4593	6200011450	S.COI	C2520C-R39G-A	T	55.4/76.1
L4594	6200011450	S.COI	C2520C-R39G-A	T	55.4/71.1
L4595	6200011450	S.COI	C2520C-R39G-A	T	55.4/66.1
L4611	6200017540	S.COI	NLV25T-101J-EF	T	60.1/83.1
L4612	6200010740	S.COI	C2520C-R27G-A	T	59.9/79.8
L4613	6200010680	S.COI	C2520C-R22G-A (0.22U)	T	60.7/76.1
L4614	6200010740	S.COI	C2520C-R27G-A	T	60.7/71.1
L4615	6200010870	S.COI	C2520C-R33G-A (0.33U)	T	60.7/66.1
L4631	6200017540	S.COI	NLV25T-101J-EF	T	19.7/61.1
L4632	6200017540	S.COI	NLV25T-101J-EF	T	64.8/64.2
L4633	6200017540	S.COI	NLV25T-101J-EF	T	73.2/59.0
L4634	6200017540	S.COI	NLV25T-101J-EF	T	80.8/59.0
L4635	6200017540	S.COI	NLV25T-101J-EF	T	93.2/65.6
L4641	6200017540	S.COI	NLV25T-101J-EF	T	68.3/69.0
L4642	6140005310	S.COI	LR-589 (4KBL-S120062)	T	78.8/64.3
L4643	6200015400	S.COI	LQH43MN102J03L	T	85.5/64.0
L4644	6200017540	S.COI	NLV25T-101J-EF	T	75.5/74.9
L4645	6140005310	S.COI	LR-589 (4KBL-S120062)	T	78.8/70.8
L4646	6200017540	S.COI	NLV25T-101J-EF	T	88.5/62.6
L4647	6200017540	S.COI	NLV25T-101J-EF	T	82.6/74.9
L4661	6200017540	S.COI	NLV25T-101J-EF	T	63.0/59.1
L4662	6200017540	S.COI	NLV25T-101J-EF	T	66.0/57.5
L4663	6200017540	S.COI	NLV25T-101J-EF	T	63.4/54.2
L4664	6200017540	S.COI	NLV25T-101J-EF	T	66.0/50.9
L4665	6200017800	S.COI	NLV25T-220J-EF	T	69.5/49.0
L4666	6200017540	S.COI	NLV25T-101J-EF	T	75.1/47.3
L4667	6200017540	S.COI	NLV25T-101J-EF	T	78.2/47.1
L4668	6200017540	S.COI	NLV25T-101J-EF	T	81.2/48.0
L4669	6200017540	S.COI	NLV25T-101J-EF	T	84.8/48.0
L4670	6200017540	S.COI	NLV25T-101J-EF	T	87.9/47.1
L4671	6200017540	S.COI	NLV25T-101J-EF	T	90.9/48.0
L4674	6200017540	S.COI	NLV25T-101J-EF	T	94.0/49.0
L4675	6200017540	S.COI	NLV25T-101J-EF	T	97.0/50.7
L4701	6200010670	S.COI	C2520C-R18G-A (0.18U)	T	3.4/90.5

Eqv.= This component is equivalent to the REF No. component listed above, and may be substituted on parts orders and repairs.

[MAIN UNIT]

REF NO.	PART NO.	DESCRIPTION		M.	H/V LOCATION
L4702	6200010740	S.COI	C2520C-R27G-A	T	3.7/94.0
L4704	6200010960	S.COI	C2520C-R47G-A (0.47U)	T	7.2/94.3
L4705	6200010960	S.COI	C2520C-R47G-A (0.47U)	T	10.7/94.0
L4706	6200017540	S.COI	NLV25T-101J-EF	T	16.2/89.1
L4707	6200010960	S.COI	C2520C-R47G-A (0.47U)	T	14.2/92.1
L4731	6200017540	S.COI	NLV25T-101J-EF	T	20.4/91.5
L4732	6200010810	S.COI	C2520C-2R2G-A	T	22.1/96.4
L4733	6200017530	S.COI	NLV25T-100J-EF	T	18.7/96.1
L4734	6200010440	S.COI	C2520C-1R2G-A (1.2U)	T	22.1/102.0
L4735	6200017530	S.COI	NLV25T-100J-EF	T	18.7/102.4
L4736	6200010810	S.COI	C2520C-2R2G-A	T	22.1/108.2
L4737	6200017540	S.COI	NLV25T-101J-EF	T	22.3/115.7
L4739	6200010680	S.COI	C2520C-R22G-A (0.22U)	T	21.1/111.8
L4751	6200017540	S.COI	NLV25T-101J-EF	T	27.8/91.5
L4752	6200010770	S.COI	C2520C-R68G-A	T	29.6/96.4
L4753	6200017790	S.COI	NLV25T-150J-EF	T	26.2/96.1
L4754	6200010740	S.COI	C2520C-R27G-A	T	29.6/102.0
L4755	6200017790	S.COI	NLV25T-150J-EF	T	26.2/102.4
L4756	6200010770	S.COI	C2520C-R68G-A	T	29.7/107.7
L4757	6200017540	S.COI	NLV25T-101J-EF	T	28.4/115.1
L4758	6200010680	S.COI	C2520C-R22G-A (0.22U)	T	27.4/111.2
L4771	6200017540	S.COI	NLV25T-101J-EF	T	35.4/91.5
L4772	6200010740	S.COI	C2520C-R27G-A	T	37.2/96.4
L4773	6200017530	S.COI	NLV25T-100J-EF	T	33.7/96.1
L4774	6200010670	S.COI	C2520C-R18G-A (0.18U)	T	37.2/102.0
L4775	6200017530	S.COI	NLV25T-100J-EF	T	33.7/102.4
L4776	6200010740	S.COI	C2520C-R27G-A	T	37.2/108.2
L4777	6200017540	S.COI	NLV25T-101J-EF	T	35.6/113.7
L4791	6200017540	S.COI	NLV25T-101J-EF	T	42.9/91.5
L4792	6200010740	S.COI	C2520C-R27G-A	T	44.7/96.4
L4793	6200017640	S.COI	NLV25T-3R3J-EF	T	41.2/96.1
L4794	6200017620	S.COI	NLV25T-2R7J-EF	T	44.2/99.7
L4795	6200010680	S.COI	C2520C-R22G-A (0.22U)	T	44.6/103.0
L4796	6200017640	S.COI	NLV25T-3R3J-EF	T	41.2/102.6
L4797	6200017780	S.COI	NLV25T-3R9J-EF	T	43.4/106.3
L4798	6200010740	S.COI	C2520C-R27G-A	T	45.4/109.6
L4799	6200010950	S.COI	C2520C-1R5G-A (1.5U)	T	41.7/110.4
L4800	6200017540	S.COI	NLV25T-101J-EF	T	42.9/116.5
L4811	6200017540	S.COI	NLV25T-101J-EF	T	51.7/90.8
L4813	6200007760	S.COI	LQW2BHN82NJ03L	T	54.0/96.7
L4814	6200017770	S.COI	NLV25T-5R6J-EF	T	50.3/98.2
L4815	6200017760	S.COI	NLV25T-R68J-EF	T	53.2/99.4
L4816	6200007760	S.COI	LQW2BHN82NJ03L	T	52.3/102.7
L4817	6200017770	S.COI	NLV25T-5R6J-EF	T	49.4/102.8
L4818	6200017580	S.COI	NLV25T-1R0J-EF	T	50.3/107.8
L4819	6200007760	S.COI	LQW2BHN82NJ03L	T	53.8/106.7
L4820	6200017750	S.COI	NLV25T-R56J-EF	T	49.4/110.8
L4821	6200017540	S.COI	NLV25T-101J-EF	T	51.1/115.5
L4841	6200017540	S.COI	NLV25T-101J-EF	T	59.5/90.8
L4842	6200017610	S.COI	NLV25T-2R2J-EF	T	57.3/93.7
L4843	6200007800	S.COI	LQW2BHNR18J03L	T	61.5/96.7
L4844	6200017610	S.COI	NLV25T-2R2J-EF	T	57.9/98.2
L4845	6200017560	S.COI	NLV25T-R82J-EF	T	61.2/99.4
L4846	6200007790	S.COI	LQW2BHNR15J03L	T	59.9/103.6
L4847	6200017590	S.COI	NLV25T-1R2J-EF	T	57.0/102.8
L4848	6200017820	S.COI	NLV25T-1R5J-EF	T	57.9/107.8
L4849	6200007780	S.COI	LQW2BHNR12J03L	T	61.5/107.8
L4850	6200017670	S.COI	NLV25T-R47J-EF	T	57.0/110.8
L4851	6200017540	S.COI	NLV25T-101J-EF	T	58.7/115.5
L4871	6200017540	S.COI	NLV25T-101J-EF	T	17.6/115.6
L4872	6200017540	S.COI	NLV25T-101J-EF	T	67.7/105.2
L4873	6200017540	S.COI	NLV25T-101J-EF	T	70.5/106.9
L4874	6200017540	S.COI	NLV25T-101J-EF	T	70.5/100.8
L4875	6200017540	S.COI	NLV25T-101J-EF	T	68.7/92.5
L4881	6200017540	S.COI	NLV25T-101J-EF	T	79.2/113.1
L4882	6140005310	S.COI	LR-589 (4KBL-S120062)	T	76.6/103.7
L4883	6200015400	S.COI	LQH43MN102J03L	T	76.2/97.0
L4884	6200017540	S.COI	NLV25T-101J-EF	T	84.9/108.9
L4885	6140005310	S.COI	LR-589 (4KBL-S120062)	T	83.1/103.7
L4886	6200017540	S.COI	NLV25T-101J-EF	T	75.6/93.9
L4887	6200017540	S.COI	NLV25T-101J-EF	T	84.3/98.1
L5161	6200017570	S.COI	NLFV25T-101K-EF	T	92.7/68.7
L5162	6200017570	S.COI	NLFV25T-101K-EF	T	93.5/71.7
L5163	6200017570	S.COI	NLFV25T-101K-EF	T	92.7/74.8
L5181	6140004680	S.COI	LR-528 4KBL	T	99.3/80.3
L5191	6200010870	S.COI	C2520C-R33G-A (0.33U)	T	86.9/81.0
L5192	6200010870	S.COI	C2520C-R33G-A (0.33U)	T	90.9/81.0
L5221	6200017570	S.COI	NLFV25T-101K-EF	T	87.1/94.5
L5222	6200017570	S.COI	NLFV25T-101K-EF	T	90.1/93.6
L5223	6200017570	S.COI	NLFV25T-101K-EF	T	92.9/94.5
L5231	6200010870	S.COI	C2520C-R33G-A (0.33U)	T	86.9/87.3
L5232	6200010870	S.COI	C2520C-R33G-A (0.33U)	T	90.9/87.3
L5241	6140004680	S.COI	LR-528 4KBL	T	99.3/91.8
L5281	6200010670	S.COI	C2520C-R18G-A (0.18U)	T	94.2/56.3
L5282	6200010740	S.COI	C2520C-R27G-A	T	94.2/60.8
L5283	6140005470	S.COI	LR-592 4KBL-S130709	T	101.1/69.7
L5601	6170000140	COI	LW-15		
R4001	7030016150	S.RES	RMC1/16S-100JTH (10)	T	102.5/110.9
R4002	7030016150	S.RES	RMC1/16S-100JTH (10)	T	101.5/110.9
R4003	7030016150	S.RES	RMC1/16S-100JTH (10)	T	100.5/110.9
R4004	7030016150	S.RES	RMC1/16S-100JTH (10)	T	99.5/110.9
R4005	7030016150	S.RES	RMC1/16S-100JTH (10)	T	98.5/110.9
R4006	7030016150	S.RES	RMC1/16S-100JTH (10)	T	97.5/110.9
R4007	7030016150	S.RES	RMC1/16S-100JTH (10)	T	96.5/110.9
R4008	7030016150	S.RES	RMC1/16S-100JTH (10)	T	95.5/110.9
R4009	7030016150	S.RES	RMC1/16S-100JTH (10)	T	94.5/110.9
R4010	7030016150	S.RES	RMC1/16S-100JTH (10)	T	93.5/110.9
R4011	7030016150	S.RES	RMC1/16S-100JTH (10)	T	92.5/110.9
R4021	7030015910	S.RES	RMC1/16S-101JTH (100)	T	107.8/111.3
R4022	7030016110	S.RES	RMC1/16S-473JTH (47 k)	T	111.2/110.2
R4023	7030016220	S.RES	RMC1/16S-563JTH (56 k)	T	111.2/109.2
R4024	7030015980	S.RES	RMC1/16S-333JTH (33 k)	T	111.2/108.1
R4025	7030016280	S.RES	RMC1/16S-331JTH (330)	T	111.2/107.1

M.= Mounted side (T: Mounted on the Top side, B: Mounted on the Bottom side)
H/V LOCATION=See the BOARD LAYOUTS for details.

[MAIN UNIT]

REF NO.	PART NO.	DESCRIPTION	M.	H/V LOCATION
R4026	7030015970	S.RES RMC1/16S-103JTH (10 k)	T	113.0/105.1
R4028	7030015970	S.RES RMC1/16S-103JTH (10 k)	T	111.2/106.1
R4029	7030016380	S.RES RMC1/16S-183JTH (18 k)	T	111.2/105.1
R4030	7030016110	S.RES RMC1/16S-473JTH (47 k)	T	111.2/103.1
R4031	7030015900	S.RES RMC1/16S-470JTH (47)	T	111.2/102.1
R4032	7030016290	S.RES RMC1/16S-222JTH (2.2 k)	T	116.6/100.4
R4035	7030015910	S.RES RMC1/16S-101JTH (100)	T	106.0/111.3
R4036	7030016110	S.RES RMC1/16S-473JTH (47 k)	T	103.9/110.2
R4037	7030016220	S.RES RMC1/16S-563JTH (56 k)	T	103.9/109.2
R4038	7030015980	S.RES RMC1/16S-333JTH (33 k)	T	103.9/108.1
R4039	7030016280	S.RES RMC1/16S-331JTH (330)	T	103.9/107.1
R4040	7030015970	S.RES RMC1/16S-103JTH (10 k)	T	102.1/106.1
R4041	7030016110	S.RES RMC1/16S-473JTH (47 k)	T	103.9/104.1
R4042	7030015960	S.RES RMC1/16S-472JTH (4.7 k)	T	103.9/106.1
R4043	7030016330	S.RES RMC1/16S-153JTH (15 k)	T	103.9/105.1
R4044	7030015980	S.RES RMC1/16S-333JTH (33 k)	T	103.9/103.1
R4045	7030015980	S.RES RMC1/16S-333JTH (33 k)	T	102.1/103.1
R4046	7030015910	S.RES RMC1/16S-101JTH (100)	T	103.9/101.0
R4047	7030016290	S.RES RMC1/16S-222JTH (2.2 k)	T	116.6/102.3
R4048	7030015910	S.RES RMC1/16S-101JTH (100)	T	106.1/106.9
R4049	7030015910	S.RES RMC1/16S-101JTH (100)	T	106.1/102.1
R4051	7030015920	S.RES RMC1/16S-221JTH (220)	T	95.7/24.3
R4052	7030015920	S.RES RMC1/16S-221JTH (220)	T	96.7/24.3
R4053	7030015920	S.RES RMC1/16S-221JTH (220)	T	97.7/24.3
R4054	7030015920	S.RES RMC1/16S-221JTH (220)	T	98.7/24.3
R4055	7030015920	S.RES RMC1/16S-221JTH (220)	T	99.7/24.3
R4056	7030015920	S.RES RMC1/16S-221JTH (220)	T	100.7/24.3
R4057	7030015920	S.RES RMC1/16S-221JTH (220)	T	101.7/24.3
R4061	7030015990	S.RES RMC1/16S-683JTH (68 k)	T	175.1/105.4
R4062	7030016090	S.RES RMC1/16S-223JTH (22 k)	T	173.3/105.4
R4063	7030016020	S.RES RMC1/16S-104JTH (100 k)	T	177.4/105.4
R4064	7030016090	S.RES RMC1/16S-223JTH (22 k)	T	179.2/105.4
R4065	7030016050	S.RES RMC1/16S-102JTH (1 k)	T	178.2/109.8
R4066	7030016030	S.RES RMC1/16S-154JTH (150 k)	T	176.8/109.4
R4067	7030016220	S.RES RMC1/16S-563JTH (56 k)	T	179.6/109.4
R4071	7030016510	S.RES RMC1/16S-4R7JTH (4.7)	T	157.0/110.9
R4072	7030016050	S.RES RMC1/16S-102JTH (1 k)	T	139.9/108.1
R4074	7030016050	S.RES RMC1/16S-102JTH (1 k)	T	158.0/110.9
R4075	7030015920	S.RES RMC1/16S-221JTH (220)	T	147.0/110.9
R4076	7030015920	S.RES RMC1/16S-221JTH (220)	T	146.0/110.9
R4077	7030015920	S.RES RMC1/16S-221JTH (220)	T	145.0/110.9
R4078	7030015920	S.RES RMC1/16S-221JTH (220)	T	144.0/110.9
R4079	7030015920	S.RES RMC1/16S-221JTH (220)	T	143.0/110.9
R4080	7030015920	S.RES RMC1/16S-221JTH (220)	T	142.0/110.9
R4081	7030015920	S.RES RMC1/16S-221JTH (220)	T	141.0/110.9
R4082	7030016050	S.RES RMC1/16S-102JTH (1 k)	T	150.7/108.1
R4083	7030016050	S.RES RMC1/16S-102JTH (1 k)	T	185.3/106.0
R4084	7030016110	S.RES RMC1/16S-473JTH (47 k)	T	185.3/107.8
R4085	7030016110	S.RES RMC1/16S-473JTH (47 k)	T	191.0/105.1
R4086	7030016050	S.RES RMC1/16S-102JTH (1 k)	T	184.3/102.6
R4087	7030016060	S.RES RMC1/16S-105JTH (1M)	T	186.1/102.6
R4090	7030016110	S.RES RMC1/16S-473JTH (47 k)	T	158.0/104.5
R4091	7030015910	S.RES RMC1/16S-101JTH (100)	T	161.7/103.5
R4092	7030016000	S.RES RMC1/16S-823JTH (82 k)	T	162.2/101.3
R4093	7030016000	S.RES RMC1/16S-823JTH (82 k)	T	162.6/102.6
R4094	7030016050	S.RES RMC1/16S-102JTH (1 k)	T	137.7/107.3
R4095	7030015970	S.RES RMC1/16S-103JTH (10 k)	T	163.2/101.3
R4101	7030016110	S.RES RMC1/16S-473JTH (47 k)	T	151.7/102.1
R4102	7030016110	S.RES RMC1/16S-473JTH (47 k)	T	151.7/100.1
R4103	7030016110	S.RES RMC1/16S-473JTH (47 k)	T	153.3/104.1
R4104	7030016110	S.RES RMC1/16S-473JTH (47 k)	T	153.3/98.0
R4105	7030016050	S.RES RMC1/16S-102JTH (1 k)	T	151.7/103.1
R4106	7030016050	S.RES RMC1/16S-102JTH (1 k)	T	151.7/99.1
R4107	7030018130	S.RES RMC1/16SK472FTH (4.7 k)	T	192.1/19.6
R4108	7030016900	S.RES RMC1/16SK102FTH (1 k)	T	190.3/18.6
R4109	7030016050	S.RES RMC1/16S-102JTH (1 k)	T	192.1/18.6
R4110	7030015910	S.RES RMC1/16S-101JTH (100)	T	151.7/101.1
R4111	7030016050	S.RES RMC1/16S-102JTH (1 k)	T	158.0/98.0
R4112	7030016020	S.RES RMC1/16S-104JTH (100 k)	T	162.6/100.0
R4113	7030016020	S.RES RMC1/16S-104JTH (100 k)	T	162.6/99.0
R4114	7030016230	S.RES RMC1/16S-394JTH (390 k)	T	161.2/99.4
R4115	7030016110	S.RES RMC1/16S-473JTH (47 k)	T	162.6/98.0
R4116	7030015920	S.RES RMC1/16S-221JTH (220)	T	160.8/98.0
R4141	7030015960	S.RES RMC1/16S-472JTH (4.7 k)	T	146.5/12.0
R4142	7030016330	S.RES RMC1/16S-153JTH (15 k)	T	142.9/12.0
R4143	7030015980	S.RES RMC1/16S-333JTH (33 k)	T	144.7/12.0
R4144	7030015960	S.RES RMC1/16S-472JTH (4.7 k)	T	144.7/13.0
R4145	7030016090	S.RES RMC1/16S-223JTH (22 k)	T	173.5/12.5
R4146	7030016330	S.RES RMC1/16S-153JTH (15 k)	T	174.5/8.9
R4147	7030015960	S.RES RMC1/16S-472JTH (4.7 k)	T	173.5/10.7
R4148	7030016110	S.RES RMC1/16S-473JTH (47 k)	T	173.5/8.9
R4161	7030016270	S.RES RMC1/16S-151JTH (150)	T	142.9/8.3
R4162	7030015970	S.RES RMC1/16S-103JTH (10 k)	T	142.9/7.3
R4181	7030016560	S.RES RMC1/16SJPTH	T	32.2/26.4
R4182	7030015930	S.RES RMC1/16S-471JTH (470)	T	32.9/39.5
R4183	7030015930	S.RES RMC1/16S-471JTH (470)	T	36.0/39.5
R4261	7030016560	S.RES RMC1/16SJPTH	T	182.6/85.6
R4263	7030016030	S.RES RMC1/16S-154JTH (150 k)	T	176.7/72.1
R4264	7030016050	S.RES RMC1/16S-102JTH (1 k)	T	178.7/72.9
R4265	7030017370	S.RES RGC1/16SC183DTH (18 k)	T	171.7/74.8
R4266	7030017370	S.RES RGC1/16SC183DTH (18 k)	T	173.1/74.3
R4267	7030018480	S.RES RGC1/16SC563DTH (56.0 k)	T	174.6/74.3
R4268	7030016910	S.RES RGC1/16SC393DTH (39 k)	T	175.6/74.3
R4321	7030021080	S.RES RMC1/2-2R7JTE (2.7)	T	175.9/83.4
R4341	7030015970	S.RES RMC1/16S-103JTH (10 k)	T	170.4/84.2
R4382	7030015910	S.RES RMC1/16S-101JTH (100)	T	114.0/15.3
R4385	7030016330	S.RES RMC1/16S-153JTH (15 k)	T	114.0/13.3
R4386	7030016400	S.RES RMC1/16S-564JTH (560 k)	T	116.7/4.6
R4387	7030016400	S.RES RMC1/16S-564JTH (560 k)	T	116.2/15.3
R4388	7030016910	S.RES RGC1/16SC393DTH (39 k)	T	115.8/14.3
R4389	7030016820	S.RES RGC1/16SC333DTH (33.0 k)	T	117.6/14.3
R4401	7030015930	S.RES RMC1/16S-471JTH (470)	T	2.4/74.3
R4402	7030016150	S.RES RMC1/16S-100JTH (10)	T	3.8/74.8
R4403	7030015930	S.RES RMC1/16S-471JTH (470)	T	2.4/75.2
R4404	7030016130	S.RES RMC1/16S-150JTH (15)	T	1.9/84.7

Eqv.= This component is equivalent to the REF No. component listed above, and may be substituted on parts orders and repairs.

[MAIN UNIT]

REF NO.	PART NO.	DESCRIPTION	M.	H/V LOCATION
R4405	7030016370	S.RES RMC1/16S-271JTH (270)	T	6.6/85.1
R4406	7030016570	S.RES RMC1/16S-180JTH (18)	T	7.7/85.1
R4407	7030016370	S.RES RMC1/16S-271JTH (270)	T	8.7/85.1
R4411	7030016210	S.RES RMC1/16S-121JTH (120)	T	7.7/81.6
R4421	7030016050	S.RES RMC1/16S-102JTH (1 k)	T	14.2/56.8
R4422	7030016050	S.RES RMC1/16S-102JTH (1 k)	T	13.2/56.8
R4423	7030015970	S.RES RMC1/16S-103JTH (10 k)	T	10.4/61.5
R4424	7030015920	S.RES RMC1/16S-221JTH (220)	T	8.1/66.7
R4425	7030016210	S.RES RMC1/16S-121JTH (120)	T	10.4/66.7
R4426	7030016490	S.RES RMC1/16S-391JTH (390)	T	10.8/77.0
R4427	7030016460	S.RES RMC1/16S-181JTH (180)	T	18.9/83.3
R4428	7030016050	S.RES RMC1/16S-102JTH (1 k)	T	13.5/51.8
R4441	7030016400	S.RES RMC1/16S-564JTH (560 k)	T	11.2/79.5
R4451	7030016210	S.RES RMC1/16S-121JTH (120)	T	18.5/64.5
R4452	7030016210	S.RES RMC1/16S-121JTH (120)	T	18.5/79.5
R4471	7030016210	S.RES RMC1/16S-121JTH (120)	T	23.1/64.5
R4472	7030016210	S.RES RMC1/16S-121JTH (120)	T	23.1/85.2
R4491	7030016210	S.RES RMC1/16S-121JTH (120)	T	27.7/64.5
R4492	7030016210	S.RES RMC1/16S-121JTH (120)	T	27.7/85.2
R4511	7030016210	S.RES RMC1/16S-121JTH (120)	T	33.8/64.5
R4512	7030016210	S.RES RMC1/16S-121JTH (120)	T	33.8/85.2
R4531	7030016210	S.RES RMC1/16S-121JTH (120)	T	39.9/64.5
R4532	7030016210	S.RES RMC1/16S-121JTH (120)	T	39.9/85.2
R4551	7030016210	S.RES RMC1/16S-121JTH (120)	T	46.0/64.5
R4552	7030016210	S.RES RMC1/16S-121JTH (120)	T	46.0/85.2
R4571	7030016210	S.RES RMC1/16S-121JTH (120)	T	50.5/64.5
R4572	7030016210	S.RES RMC1/16S-121JTH (120)	T	50.5/85.2
R4591	7030016210	S.RES RMC1/16S-121JTH (120)	T	55.7/63.7
R4592	7030016210	S.RES RMC1/16S-121JTH (120)	T	55.0/85.2
R4611	7030016210	S.RES RMC1/16S-121JTH (120)	T	61.0/63.6
R4612	7030016210	S.RES RMC1/16S-121JTH (120)	T	60.3/85.2
R4631	7030016460	S.RES RMC1/16S-181JTH (180)	T	17.4/61.2
R4632	7030019460	S.RES RMC1/8-561JTP (560)	T	64.9/61.4
R4633	7030016460	S.RES RMC1/16S-181JTH (180)	T	70.9/58.2
R4634	7030016460	S.RES RMC1/16S-181JTH (180)	T	83.1/58.2
R4635	7030016090	S.RES RMC1/16S-223JTH (22 k)	T	76.9/59.4
R4636	7030019460	S.RES RMC1/8-561JTP (560)	T	90.4/67.5
R4641	7030016460	S.RES RMC1/16S-181JTH (180)	T	69.1/67.3
R4642	7030016290	S.RES RMC1/16S-222JTH (2.2 k)	T	72.8/61.3
R4643	7030016290	S.RES RMC1/16S-222JTH (2.2 k)	T	74.7/61.3
R4644	7030016150	S.RES RMC1/16S-100JTH (10)	T	71.0/67.3
R4645	7030016180	S.RES RMC1/16S-680JTH (68)	T	74.5/70.7
R4646	7030016460	S.RES RMC1/16S-181JTH (180)	T	83.0/69.5
R4647	7030016090	S.RES RMC1/16S-223JTH (22 k)	T	107.6/55.6
R4661	7030016460	S.RES RMC1/16S-181JTH (180)	T	66.5/59.8
R4662	7030016440	S.RES RMC1/16S-272JTH (2.7 k)	T	73.8/55.8
R4663	7030016420	S.RES RMC1/16S-182JTH (1.8 k)	T	72.0/54.7
R4664	7030016410	S.RES RMC1/16S-561JTH (560)	T	66.5/55.2
R4665	7030016050	S.RES RMC1/16S-102JTH (1 k)	T	73.8/54.7
R4666	7030016420	S.RES RMC1/16S-182JTH (1.8 k)	T	72.0/53.7
R4667	7030015910	S.RES RMC1/16S-101JTH (100)	T	66.5/54.2
R4668	7030016410	S.RES RMC1/16S-561JTH (560)	T	66.5/53.2
R4669	7030016130	S.RES RMC1/16S-150JTH (15)	T	70.1/50.7
R4670	7030016280	S.RES RMC1/16S-331JTH (330)	T	70.1/51.6
R4671	7030016280	S.RES RMC1/16S-331JTH (330)	T	71.4/51.2
R4672	7030016130	S.RES RMC1/16S-150JTH (15)	T	68.6/47.1
R4673	7030016050	S.RES RMC1/16S-102JTH (1 k)	T	77.7/55.3
R4674	7030016420	S.RES RMC1/16S-182JTH (1.8 k)	T	76.7/55.3
R4675	7030016410	S.RES RMC1/16S-561JTH (560)	T	77.2/49.8
R4676	7030016440	S.RES RMC1/16S-272JTH (2.7 k)	T	78.7/55.3
R4677	7030016420	S.RES RMC1/16S-182JTH (1.8 k)	T	79.7/55.3
R4678	7030015910	S.RES RMC1/16S-101JTH (100)	T	78.2/49.8
R4679	7030016410	S.RES RMC1/16S-561JTH (560)	T	79.2/49.8
R4680	7030016050	S.RES RMC1/16S-102JTH (1 k)	T	87.4/55.3
R4681	7030016420	S.RES RMC1/16S-182JTH (1.8 k)	T	86.4/55.3
R4682	7030016410	S.RES RMC1/16S-561JTH (560)	T	86.9/49.8
R4683	7030016440	S.RES RMC1/16S-272JTH (2.7 k)	T	88.4/55.3
R4684	7030016420	S.RES RMC1/16S-182JTH (1.8 k)	T	89.4/55.3
R4685	7030015910	S.RES RMC1/16S-101JTH (100)	T	87.9/49.8
R4686	7030016410	S.RES RMC1/16S-561JTH (560)	T	88.9/49.8
R4687	7030016460	S.RES RMC1/16S-181JTH (180)	T	93.5/51.4
R4688	7030015960	S.RES RMC1/16S-472JTH (4.7 k)	T	101.4/49.0
R4689	7030019460	S.RES RMC1/8-561JTP (560)	T	95.3/53.0
R4691	7030015920	S.RES RMC1/16S-221JTH (220)	T	102.5/48.5
R4692	7030015920	S.RES RMC1/16S-221JTH (220)	T	21.3/50.4
R4695	7030016400	S.RES RMC1/16S-564JTH (560 k)	T	68.5/65.9
R4698	7030016400	S.RES RMC1/16S-564JTH (560 k)	T	87.1/69.1
R4701	7030016340	S.RES RMC1/16S-393JTH (39 k)	T	9.1/105.3
R4702	7030016340	S.RES RMC1/16S-393JTH (39 k)	T	9.1/107.1
R4703	7030016090	S.RES RMC1/16S-223JTH (22 k)	T	16.6/106.0
R4704	7030015970	S.RES RMC1/16S-103JTH (10 k)	T	15.9/95.9
R4705	7030015910	S.RES RMC1/16S-101JTH (100)	T	14.9/101.4
R4706	7030016090	S.RES RMC1/16S-223JTH (22 k)	T	14.9/100.4
R4707	7030015970	S.RES RMC1/16S-103JTH (10 k)	T	14.4/99.4
R4709	7030016460	S.RES RMC1/16S-181JTH (180)	T	18.5/89.6
R4721	7030016400	S.RES RMC1/16S-564JTH (560 k)	T	8.8/97.2
R4731	7030016300	S.RES RMC1/16S-332JTH (3.3 k)	T	22.4/91.5
R4732	7030016210	S.RES RMC1/16S-121JTH (120)	T	22.4/92.5
R4736	7030016210	S.RES RMC1/16S-121JTH (120)	T	24.1/115.3
R4751	7030016300	S.RES RMC1/16S-332JTH (3.3 k)	T	29.9/91.5
R4752	7030016210	S.RES RMC1/16S-121JTH (120)	T	29.9/92.5
R4756	7030016210	S.RES RMC1/16S-121JTH (120)	T	30.5/115.1
R4771	7030016300	S.RES RMC1/16S-332JTH (3.3 k)	T	37.5/91.5
R4772	7030016210	S.RES RMC1/16S-121JTH (120)	T	37.5/92.5
R4774	7030016560	S.RES RMC1/16SJPTH	T	35.3/110.8
R4776	7030016210	S.RES RMC1/16S-121JTH (120)	T	37.6/113.7
R4791	7030016300	S.RES RMC1/16S-332JTH (3.3 k)	T	45.0/91.5
R4792	7030016210	S.RES RMC1/16S-121JTH (120)	T	45.0/92.5
R4794	7030016560	S.RES RMC1/16SJPTH	T	44.0/113.7
R4796	7030016210	S.RES RMC1/16S-121JTH (120)	T	45.0/116.5
R4811	7030016300	S.RES RMC1/16S-332JTH (3.3 k)	T	52.7/92.8
R4812	7030016210	S.RES RMC1/16S-121JTH (120)	T	53.9/90.9
R4814	7030016560	S.RES RMC1/16SJPTH	T	51.1/112.7
R4816	7030016210	S.RES RMC1/16S-121JTH (120)	T	53.2/115.5
R4841	7030016300	S.RES RMC1/16S-332JTH (3.3 k)	T	60.5/92.8

M.= Mounted side (T: Mounted on the Top side, B: Mounted on the Bottom side)
H/V LOCATION=See the BOARD LAYOUTS for details.

[MAIN UNIT]

REF NO.	PART NO.	DESCRIPTION	M.	H/V LOCATION
R4842	7030016210	S.RES RMC1/16S-121JTH (120)	T	61.7/90.9
R4844	7030016560	S.RES RMC1/16SJPTH	T	59.7/112.8
R4846	7030016210	S.RES RMC1/16S-121JTH (120)	T	60.7/114.7
R4871	7030016460	S.RES RMC1/16S-181JTH (180)	T	19.4/115.0
R4872	7030019460	S.RES RMC1/8-561JTP (560)	T	68.2/109.0
R4873	7030016460	S.RES RMC1/16S-181JTH (180)	T	70.4/109.7
R4874	7030016460	S.RES RMC1/16S-181JTH (180)	T	70.4/98.0
R4875	7030016090	S.RES RMC1/16S-223JTH (22 k)	T	111.6/97.9
R4876	7030019460	S.RES RMC1/8-561JTP (560)	T	71.0/93.0
R4881	7030016460	S.RES RMC1/16S-181JTH (180)	T	78.2/109.8
R4882	7030016290	S.RES RMC1/16S-222JTH (2.2 k)	T	73.6/109.4
R4883	7030016290	S.RES RMC1/16S-222JTH (2.2 k)	T	73.6/107.6
R4884	7030016150	S.RES RMC1/16S-100JTH (10)	T	80.0/111.2
R4885	7030016180	S.RES RMC1/16S-680JTH (68)	T	82.7/108.5
R4886	7030016460	S.RES RMC1/16S-181JTH (180)	T	82.6/99.0
R4887	7030016090	S.RES RMC1/16S-223JTH (22 k)	T	111.6/95.7
R4901	7030016020	S.RES RMC1/16S-104JTH (100 k)	T	171.9/30.1
R4902	7030015920	S.RES RMC1/16S-221JTH (220)	T	151.1/45.2
R4903	7030015920	S.RES RMC1/16S-221JTH (220)	T	152.3/45.2
R4904	7030015920	S.RES RMC1/16S-221JTH (220)	T	161.8/55.7
R4905	7030015920	S.RES RMC1/16S-221JTH (220)	T	161.8/54.7
R4906	7030015920	S.RES RMC1/16S-221JTH (220)	T	154.3/45.2
R4907	7030015920	S.RES RMC1/16S-221JTH (220)	T	153.1/34.5
R4909	7030015920	S.RES RMC1/16S-221JTH (220)	T	153.3/45.2
R4910	7030015920	S.RES RMC1/16S-221JTH (220)	T	152.1/34.5
R4921	7030015910	S.RES RMC1/16S-101JTH (100)	T	162.2/40.5
R4931	7030016110	S.RES RMC1/16S-473JTH (47 k)	T	185.7/60.8
R4932	7030016110	S.RES RMC1/16S-473JTH (47 k)	T	181.4/60.8
R4936	7030016110	S.RES RMC1/16S-473JTH (47 k)	T	177.1/60.8
R4941	7030015970	S.RES RMC1/16S-103JTH (10 k)	T	199.5/63.8
R4942	7030015970	S.RES RMC1/16S-103JTH (10 k)	T	199.5/62.8
R4943	7030015970	S.RES RMC1/16S-103JTH (10 k)	T	199.5/66.8
R4944	7030015920	S.RES RMC1/16S-221JTH (220)	T	199.5/65.8
R4945	7030015920	S.RES RMC1/16S-221JTH (220)	T	199.5/64.8
R4946	7030015920	S.RES RMC1/16S-221JTH (220)	T	199.5/61.8
R4962	7030016560	S.RES RMC1/16SJPTH	T	187.4/64.2
R4963	7030016560	S.RES RMC1/16SJPTH	T	186.4/64.2
R4964	7030016560	S.RES RMC1/16SJPTH	T	185.4/64.2
R4965	7030016560	S.RES RMC1/16SJPTH	T	184.4/64.2
R4966	7030016560	S.RES RMC1/16SJPTH	T	183.4/64.2
R4972	7030016560	S.RES RMC1/16SJPTH	T	177.4/64.2
R4981	7030016110	S.RES RMC1/16S-473JTH (47 k)	T	176.8/30.1
R4982	7030016110	S.RES RMC1/16S-473JTH (47 k)	T	149.9/52.7
R4983	7030016110	S.RES RMC1/16S-473JTH (47 k)	T	149.9/53.6
R4984	7030016110	S.RES RMC1/16S-473JTH (47 k)	T	149.9/54.5
R4985	7030016110	S.RES RMC1/16S-473JTH (47 k)	T	161.8/48.1
R4986	7030016110	S.RES RMC1/16S-473JTH (47 k)	T	212.3/69.2
R4987	7030016110	S.RES RMC1/16S-473JTH (47 k)	T	183.1/60.8
R4988	7030016110	S.RES RMC1/16S-473JTH (47 k)	T	192.5/51.2
R4991	7030016110	S.RES RMC1/16S-473JTH (47 k)	T	152.6/60.8
R4992	7030015960	S.RES RMC1/16S-472JTH (4.7 k)	T	151.6/60.8
R4993	7030016110	S.RES RMC1/16S-473JTH (47 k)	T	169.2/29.4
R4994	7030016250	S.RES RMC1/16S-220JTH (22)	T	173.9/30.1
R4995	7030016250	S.RES RMC1/16S-220JTH (22)	T	172.9/30.1
R4996	7030016250	S.RES RMC1/16S-220JTH (22)	T	161.8/45.5
R4997	7030016250	S.RES RMC1/16S-220JTH (22)	T	161.8/44.6
R4998	7030016250	S.RES RMC1/16S-220JTH (22)	T	161.8/43.7
R4999	7030016250	S.RES RMC1/16S-220JTH (22)	T	161.8/42.8
R5001	7030015970	S.RES RMC1/16S-103JTH (10 k)	T	170.9/27.9
R5002	7030015970	S.RES RMC1/16S-103JTH (10 k)	T	171.9/27.9
R5011	7030016360	S.RES RMC1/16S-123JTH (12 k)	T	193.6/25.8
R5012	7030016110	S.RES RMC1/16S-473JTH (47 k)	T	192.6/25.8
R5013	7030016110	S.RES RMC1/16S-473JTH (47 k)	T	191.6/25.8
R5021	7030016110	S.RES RMC1/16S-473JTH (47 k)	T	192.5/33.3
R5026	7030016110	S.RES RMC1/16S-473JTH (47 k)	T	192.5/35.8
R5029	7030016110	S.RES RMC1/16S-473JTH (47 k)	T	166.0/60.8
R5035	7030016050	S.RES RMC1/16S-102JTH (1 k)	T	161.8/51.0
R5036	7030015960	S.RES RMC1/16S-472JTH (4.7 k)	T	160.0/51.4
R5042	7030016110	S.RES RMC1/16S-473JTH (47 k)	T	176.2/60.8
R5043	7030016110	S.RES RMC1/16S-473JTH (47 k)	T	184.0/60.8
R5044	7030015960	S.RES RMC1/16S-472JTH (4.7 k)	T	158.6/51.8
R5046	7030016110	S.RES RMC1/16S-473JTH (47 k)	T	150.1/34.5
R5047	7030015960	S.RES RMC1/16S-472JTH (4.7 k)	T	152.9/49.5
R5048	7030015980	S.RES RMC1/16S-333JTH (33 k)	T	152.9/51.3
R5049	7030016330	S.RES RMC1/16S-153JTH (15 k)	T	153.8/51.3
R5051	7030016110	S.RES RMC1/16S-473JTH (47 k)	T	149.1/102.4
R5061	7030016110	S.RES RMC1/16S-473JTH (47 k)	T	136.9/98.5
R5062	7030016110	S.RES RMC1/16S-473JTH (47 k)	T	151.1/34.5
R5071	7030015960	S.RES RMC1/16S-472JTH (4.7 k)	T	201.1/13.8
R5072	7030015970	S.RES RMC1/16S-103JTH (10 k)	T	202.9/13.8
R5081	7030015980	S.RES RMC1/16S-333JTH (33 k)	T	207.8/41.2
R5083	7030018130	S.RES RMC1/16SK472FTH (4.7 k)	T	209.8/41.2
R5084	7030015970	S.RES RMC1/16S-103JTH (10 k)	T	208.8/41.2
R5085	7030016110	S.RES RMC1/16S-473JTH (47 k)	T	206.8/41.2
R5086	7030015970	S.RES RMC1/16S-103JTH (10 k)	T	205.8/41.2
R5087	7030016110	S.RES RMC1/16S-473JTH (47 k)	T	204.8/41.2
R5089	7030016150	S.RES RMC1/16S-100JTH (10)	T	203.8/41.2
R5101	7410001240	S.ARR EXB28V220JX	T	199.2/103.2
R5102	7030016050	S.RES RMC1/16S-102JTH (1 k)	T	203.5/117.4
R5103	7030016110	S.RES RMC1/16S-473JTH (47 k)	T	207.9/65.6
R5104	7030016110	S.RES RMC1/16S-473JTH (47 k)	T	208.1/58.5
R5105	7030016250	S.RES RMC1/16S-220JTH (22)	T	153.4/89.8
R5107	7030016110	S.RES RMC1/16S-473JTH (47 k)	T	208.1/55.9
R5108	7030016110	S.RES RMC1/16S-473JTH (47 k)	T	208.1/54.9
R5111	7030015970	S.RES RMC1/16S-103JTH (10 k)	T	153.5/62.9
R5112	7030015970	S.RES RMC1/16S-103JTH (10 k)	T	154.5/62.9
R5113	7030015970	S.RES RMC1/16S-103JTH (10 k)	T	153.4/90.8
R5114	7030015970	S.RES RMC1/16S-103JTH (10 k)	T	155.4/62.9
R5151	7030015970	S.RES RMC1/16S-103JTH (10 k)	T	129.8/80.7
R5161	7030016270	S.RES RMC1/16S-151JTH (150)	T	94.6/67.8
R5162	7030016420	S.RES RMC1/16S-182JTH (1.8 k)	T	85.3/70.2
R5163	7030016410	S.RES RMC1/16S-561JTH (560)	T	90.8/70.7
R5164	7030016560	S.RES RMC1/16SJPTH	T	90.8/71.7
R5165	7030016410	S.RES RMC1/16S-561JTH (560)	T	85.3/71.2
R5166	7030016420	S.RES RMC1/16S-182JTH (1.8 k)	T	85.3/73.2

Eqv.= This component is equivalent to the REF No. component listed above, and may be substituted on parts orders and repairs.

[MAIN UNIT]

REF NO.	PART NO.	DESCRIPTION	M.	H/V LOCATION
R5168	7030016410	S.RES RMC1/16S-561JTH (560)	T	90.8/72.7
R5181	7030015970	S.RES RMC1/16S-103JTH (10 k)	T	105.4/83.3
R5182	7030016250	S.RES RMC1/16S-220JTH (22)	T	108.1/81.0
R5183	7030016250	S.RES RMC1/16S-220JTH (22)	T	108.1/79.1
R5184	7030016460	S.RES RMC1/16S-181JTH (180)	T	104.5/76.7
R5191	7030016290	S.RES RMC1/16S-222JTH (2.2 k)	T	89.8/77.7
R5192	7030015900	S.RES RMC1/16S-470JTH (47)	T	88.8/77.7
R5193	7030016250	S.RES RMC1/16S-220JTH (22)	T	87.8/77.7
R5194	7030015900	S.RES RMC1/16S-470JTH (47)	T	86.8/77.7
R5195	7030016250	S.RES RMC1/16S-220JTH (22)	T	85.8/77.7
R5196	7030016170	S.RES RMC1/16S-560JTH (56)	T	93.0/80.7
R5197	7030015930	S.RES RMC1/16S-471JTH (470)	T	94.0/80.7
R5201	7030016510	S.RES RMC1/16S-4R7JTH (4.7)	T	118.9/85.1
R5202	7030016510	S.RES RMC1/16S-4R7JTH (4.7)	T	118.9/84.2
R5203	7030016510	S.RES RMC1/16S-4R7JTH (4.7)	T	118.9/87.7
R5204	7030016510	S.RES RMC1/16S-4R7JTH (4.7)	T	118.9/86.7
R5205	7030015910	S.RES RMC1/16S-101JTH (100)	T	123.7/80.1
R5206	7030015970	S.RES RMC1/16S-103JTH (10 k)	T	122.6/91.1
R5221	7030016270	S.RES RMC1/16S-151JTH (150)	T	93.9/92.6
R5222	7030016420	S.RES RMC1/16S-182JTH (1.8 k)	T	89.6/101.8
R5223	7030016410	S.RES RMC1/16S-561JTH (560)	T	89.1/96.3
R5224	7030016560	S.RES RMC1/16SJPTH	T	90.1/96.3
R5225	7030016410	S.RES RMC1/16S-561JTH (560)	T	89.6/104.1
R5226	7030016420	S.RES RMC1/16S-182JTH (1.8 k)	T	90.6/101.8
R5227	7030016440	S.RES RMC1/16S-272JTH (2.7 k)	T	88.5/104.1
R5228	7030016410	S.RES RMC1/16S-561JTH (560)	T	91.1/96.3
R5231	7030016290	S.RES RMC1/16S-222JTH (2.2 k)	T	89.8/90.4
R5232	7030015900	S.RES RMC1/16S-470JTH (47)	T	88.8/90.4
R5233	7030016250	S.RES RMC1/16S-220JTH (22)	T	87.8/90.4
R5234	7030015900	S.RES RMC1/16S-470JTH (47)	T	86.8/90.4
R5235	7030016250	S.RES RMC1/16S-220JTH (22)	T	85.8/90.4
R5236	7030016170	S.RES RMC1/16S-560JTH (56)	T	93.0/87.6
R5237	7030015930	S.RES RMC1/16S-471JTH (470)	T	94.0/87.6
R5241	7030015970	S.RES RMC1/16S-103JTH (10 k)	T	105.5/94.7
R5242	7030016250	S.RES RMC1/16S-220JTH (22)	T	108.2/92.7
R5243	7030016250	S.RES RMC1/16S-220JTH (22)	T	108.2/90.8
R5246	7030016460	S.RES RMC1/16S-181JTH (180)	T	104.5/88.2
R5281	7030015910	S.RES RMC1/16S-101JTH (100)	T	107.2/69.7
R5285	7030016210	S.RES RMC1/16S-121JTH (120)	T	118.8/71.3
R5286	7030016420	S.RES RMC1/16S-182JTH (1.8 k)	T	118.8/72.3
R5311	7030016250	S.RES RMC1/16S-220JTH (22)	T	138.9/61.9
R5312	7030016250	S.RES RMC1/16S-220JTH (22)	T	142.7/61.9
R5313	7030016250	S.RES RMC1/16S-220JTH (22)	T	144.6/61.9
R5314	7030016250	S.RES RMC1/16S-220JTH (22)	T	140.8/61.9
R5315	7030016250	S.RES RMC1/16S-220JTH (22)	T	141.8/61.9
R5316	7030015910	S.RES RMC1/16S-101JTH (100)	T	145.6/61.9
R5317	7030016250	S.RES RMC1/16S-220JTH (22)	T	143.7/61.9
R5318	7030016250	S.RES RMC1/16S-220JTH (22)	T	139.9/61.9
R5319	7030016250	S.RES RMC1/16S-220JTH (22)	T	150.4/62.9
R5351	7030016960	S.RES RGC1/16SC102DTH (1.0 k)	T	156.4/62.9
R5352	7030016960	S.RES RGC1/16SC102DTH (1.0 k)	T	156.4/60.8
R5401	7030015970	S.RES RMC1/16S-103JTH (10 k)	T	143.3/59.6
R5402	7030015970	S.RES RMC1/16S-103JTH (10 k)	T	145.3/50.7
R5421	7030016500	S.RES RMC1/16S-562JTH (5.6 k)	T	110.4/48.4
R5423	7030015970	S.RES RMC1/16S-103JTH (10 k)	T	119.9/41.2
R5424	7030016360	S.RES RMC1/16S-123JTH (12 k)	T	117.3/48.2
R5425	7030016380	S.RES RMC1/16S-183JTH (18 k)	T	120.4/46.6
R5426	7030015930	S.RES RMC1/16S-471JTH (470)	T	120.7/48.6
R5427	7030015920	S.RES RMC1/16S-221JTH (220)	T	118.3/50.1
R5441	7030015930	S.RES RMC1/16S-471JTH (470)	T	116.7/52.2
R5442	7030015970	S.RES RMC1/16S-103JTH (10 k)	T	118.0/52.6
R5451	7030015900	S.RES RMC1/16S-470JTH (47)	T	118.7/57.8
R5461	7030015910	S.RES RMC1/16S-101JTH (100)	T	119.7/57.8
R5462	7030015910	S.RES RMC1/16S-101JTH (100)	T	120.7/57.8
R5463	7030015970	S.RES RMC1/16S-103JTH (10 k)	T	121.7/57.8
R5464	7030015970	S.RES RMC1/16S-103JTH (10 k)	T	125.2/57.8
R5482	7030016360	S.RES RMC1/16S-123JTH (12 k)	T	127.1/38.9
R5483	7030015970	S.RES RMC1/16S-103JTH (10 k)	T	125.7/38.9
R5484	7030016360	S.RES RMC1/16S-123JTH (12 k)	T	123.2/48.2
R5485	7030016380	S.RES RMC1/16S-183JTH (18 k)	T	126.3/46.6
R5486	7030015930	S.RES RMC1/16S-471JTH (470)	T	126.6/48.6
R5487	7030015920	S.RES RMC1/16S-221JTH (220)	T	124.2/50.1
R5488	7030015930	S.RES RMC1/16S-471JTH (470)	T	122.4/52.2
R5491	7030015970	S.RES RMC1/16S-103JTH (10 k)	T	123.8/52.6
R5501	7030016560	S.RES RMC1/16SJPTH	T	92.3/37.2
R5502	7410001240	S.ARR EXB28V220JX	T	90.1/37.9
R5503	7410001240	S.ARR EXB28V220JX	T	84.8/37.9
R5504	7030016040	S.RES RMC1/16S-224JTH (220 k)	T	83.1/36.6
R5505	7030016560	S.RES RMC1/16SJPTH	T	94.1/37.2
R5506	7030016560	S.RES RMC1/16SJPTH	T	55.5/22.0
R5507	7030015910	S.RES RMC1/16S-101JTH (100)	T	57.0/22.0
R5521	7030015910	S.RES RMC1/16S-101JTH (100)	T	55.1/43.7
R5522	7030016500	S.RES RMC1/16S-562JTH (5.6 k)	T	56.6/29.7
R5523	7030016050	S.RES RMC1/16S-102JTH (1 k)	T	57.6/31.5
R5524	7030016380	S.RES RMC1/16S-183JTH (18 k)	T	56.6/31.5
R5525	7030016440	S.RES RMC1/16S-272JTH (2.7 k)	T	55.6/31.5
R5526	7030015910	S.RES RMC1/16S-101JTH (100)	T	54.6/31.5
R5527	7030015960	S.RES RMC1/16S-472JTH (4.7 k)	T	59.3/39.9
R5541	7030015910	S.RES RMC1/16S-101JTH (100)	T	136.7/8.9
R5542	7030016430	S.RES RMC1/16S-392JTH (3.9 k)	T	140.4/6.9
R5543	7030016050	S.RES RMC1/16S-102JTH (1 k)	T	139.4/5.1
R5544	7030016300	S.RES RMC1/16S-332JTH (3.3 k)	T	127.3/6.9
R5545	7030016050	S.RES RMC1/16S-102JTH (1 k)	T	128.3/5.1
R5546	7030016360	S.RES RMC1/16S-123JTH (12 k)	T	139.4/6.9
R5547	7030016120	S.RES RMC1/16S-682JTH (6.8 k)	T	128.3/6.9
R5548	7030016430	S.RES RMC1/16S-392JTH (3.9 k)	T	139.4/8.7
R5549	7030016120	S.RES RMC1/16S-682JTH (6.8 k)	T	128.3/8.6
R5550	7030015910	S.RES RMC1/16S-101JTH (100)	T	138.4/8.7
R5551	7030015910	S.RES RMC1/16S-101JTH (100)	T	129.3/8.6
R5552	7030016110	S.RES RMC1/16S-473JTH (47 k)	T	106.9/5.5
R5553	7030016110	S.RES RMC1/16S-473JTH (47 k)	T	109.1/5.5
R5561	7030015910	S.RES RMC1/16S-101JTH (100)	T	111.6/54.7
R5562	7030015970	S.RES RMC1/16S-103JTH (10 k)	T	111.4/44.7
R5563	7030016050	S.RES RMC1/16S-102JTH (1 k)	T	112.4/44.7
R5565	7030015970	S.RES RMC1/16S-103JTH (10 k)	T	110.4/44.7

M.= Mounted side (T: Mounted on the Top side, B: Mounted on the Bottom side)
H/V LOCATION=See the BOARD LAYOUTS for details.

[MAIN UNIT]

REF NO.	PART NO.	DESCRIPTION		M.	H/V LOCATION
R5566	7030015910	S.RES	RMC1/16S-101JTH (100)	T	110.4/46.6
R5573	7030015960	S.RES	RMC1/16S-472JTH (4.7 k)	T	113.6/53.2
R5581	7030015910	S.RES	RMC1/16S-101JTH (100)	T	101.6/58.8
R5582	7030016560	S.RES	RMC1/16SJPTH	T	101.6/62.8
R5583	7030016560	S.RES	RMC1/16SJPTH	T	111.0/62.0
R5584	7030016020	S.RES	RMC1/16S-104JTH (100 k)	T	105.3/62.8
R5585	7030016020	S.RES	RMC1/16S-104JTH (100 k)	T	101.6/61.8
R5586	7030016020	S.RES	RMC1/16S-104JTH (100 k)	T	106.8/58.4
R5587	7030016020	S.RES	RMC1/16S-104JTH (100 k)	T	109.1/61.0
R5588	7030016020	S.RES	RMC1/16S-104JTH (100 k)	T	101.6/60.8
R5589	7030015910	S.RES	RMC1/16S-101JTH (100)	T	101.6/59.8
R5590	7030016020	S.RES	RMC1/16S-104JTH (100 k)	T	109.1/60.0
R5591	7030015910	S.RES	RMC1/16S-101JTH (100)	T	109.1/59.0
R5592	7030015970	S.RES	RMC1/16S-103JTH (10 k)	T	99.7/60.8
R5593	7030015970	S.RES	RMC1/16S-103JTH (10 k)	T	111.0/59.0
R5603	7030015960	S.RES	RMC1/16S-472JTH (4.7 k)	T	12.1/31.1
R5604	7030016560	S.RES	RMC1/16SJPTH	T	51.4/29.9
R5611	7030016290	S.RES	RMC1/16S-222JTH (2.2 k)	T	15.9/21.1
R5612	7030016150	S.RES	RMC1/16S-100JTH (10)	T	15.9/20.1
R5621	7030016250	S.RES	RMC1/16S-220JTH (22)	T	77.8/30.8
R5622	7410001240	S.ARR	EXB28V220JX	T	78.1/32.6
R5642	7030016110	S.RES	RMC1/16S-473JTH (47 k)	T	66.1/29.5
R5645	7030015970	S.RES	RMC1/16S-103JTH (10 k)	T	181.6/12.8
R5649	7030016380	S.RES	RMC1/16S-183JTH (18 k)	T	62.1/28.9
R5650	7030016380	S.RES	RMC1/16S-183JTH (18 k)	T	62.1/27.9
R5651	7030015970	S.RES	RMC1/16S-103JTH (10 k)	T	62.1/25.1
R5652	7030016110	S.RES	RMC1/16S-473JTH (47 k)	T	59.5/16.8
R5653	7030015970	S.RES	RMC1/16S-103JTH (10 k)	T	61.7/19.5
R5654	7030016110	S.RES	RMC1/16S-473JTH (47 k)	T	61.7/20.5
R5655	7030015940	S.RES	RMC1/16S-681JTH (680)	T	64.4/16.5
R5661	7030016110	S.RES	RMC1/16S-473JTH (47 k)	T	177.3/12.8
R5662	7030016110	S.RES	RMC1/16S-473JTH (47 k)	T	179.3/12.8
R5681	7030016110	S.RES	RMC1/16S-473JTH (47 k)	T	59.5/10.1
R5682	7030016110	S.RES	RMC1/16S-473JTH (47 k)	T	61.7/13.5
R5683	7030016110	S.RES	RMC1/16S-473JTH (47 k)	T	61.7/18.5
R5684	7030016110	S.RES	RMC1/16S-473JTH (47 k)	T	178.3/12.8
R5685	7030016110	S.RES	RMC1/16S-473JTH (47 k)	T	61.7/12.5
R5686	7030016330	S.RES	RMC1/16S-153JTH (15 k)	T	61.7/9.5
R5687	7030016300	S.RES	RMC1/16S-332JTH (3.3 k)	T	61.7/10.5
R5901	7030016110	S.RES	RMC1/16S-473JTH (47 k)	T	207.6/78.9
R5902	7030016390	S.RES	RMC1/16S-184JTH (180 k)	T	206.6/78.9
R5903	7030016040	S.RES	RMC1/16S-224JTH (220 k)	T	209.0/76.9
R5904	7030015960	S.RES	RMC1/16S-472JTH (4.7 k)	T	207.2/76.9
R5911	7030015970	S.RES	RMC1/16S-103JTH (10 k)	T	206.6/82.7
R5912	7030016140	S.RES	RMC1/16S-124JTH (120 k)	T	207.6/84.5
R5913	7030015910	S.RES	RMC1/16S-101JTH (100)	T	208.9/85.2
R5914	7030016560	S.RES	RMC1/16SJPTH	T	205.6/84.8
R5915	7030015990	S.RES	RMC1/16S-683JTH (68 k)	T	202.1/85.2
R5916	7030016340	S.RES	RMC1/16S-393JTH (39 k)	T	202.1/84.2
R5917	7030016220	S.RES	RMC1/16S-563JTH (56 k)	T	203.6/82.7
R5918	7030016110	S.RES	RMC1/16S-473JTH (47 k)	T	203.6/84.8
R5919	7030015910	S.RES	RMC1/16S-101JTH (100)	T	204.6/84.8
R5920	7030015920	S.RES	RMC1/16S-221JTH (220)	T	204.6/94.5
R5921	7030016560	S.RES	RMC1/16SJPTH	T	193.7/82.7
R5922	7030018160	S.RES	RMC1/16S-475JTH (4.7 M)	T	194.2/85.2
R5923	7030016720	S.RES	RMC1/16S-185JTH (1.8 M)	T	194.6/82.7
R5924	7030016060	S.RES	RMC1/16S-105JTH (1M)	T	192.0/88.1
R5925	7030015910	S.RES	RMC1/16S-101JTH (100)	T	195.6/84.8
R5926	7030015910	S.RES	RMC1/16S-101JTH (100)	T	195.7/94.5
R5931	7030016710	S.RES	RMC1/16S-106JTH (10 M)	T	195.6/82.7
R5932	7030016070	S.RES	RMC1/16S-474JTH (470 k)	T	197.0/82.3
R5933	7030016560	S.RES	RMC1/16SJPTH	T	213.7/97.4
R5941	7030015930	S.RES	RMC1/16S-471JTH (470)	T	200.7/94.5
R5942	7030016320	S.RES	RMC1/16S-225JTH (2.2 M)	T	202.2/94.1
R5943	7030016040	S.RES	RMC1/16S-224JTH (220 k)	T	201.8/96.6
R5944	7030016000	S.RES	RMC1/16S-823JTH (82 k)	T	200.9/91.4
R5945	7030016380	S.RES	RMC1/16S-183JTH (18 k)	T	203.6/94.5
R5946	7030016110	S.RES	RMC1/16S-473JTH (47 k)	T	201.8/98.4
R5951	7030016290	S.RES	RMC1/16S-222JTH (2.2 k)	T	209.1/96.0
R5952	7030016320	S.RES	RMC1/16S-225JTH (2.2 M)	T	209.1/95.0
R5953	7030016560	S.RES	RMC1/16SJPTH	T	207.6/94.5
R5954	7030016020	S.RES	RMC1/16S-104JTH (100 k)	T	206.6/94.5
R5955	7030016000	S.RES	RMC1/16S-823JTH (82 k)	T	208.1/92.5
R5956	7030016290	S.RES	RMC1/16S-222JTH (2.2 k)	T	205.6/94.5
R5957	7030015960	S.RES	RMC1/16S-472JTH (4.7 k)	T	206.6/96.6
R5961	7030015930	S.RES	RMC1/16S-471JTH (470)	T	191.5/94.1
R5962	7030016060	S.RES	RMC1/16S-105JTH (1 M)	T	193.3/94.1
R5963	7030016020	S.RES	RMC1/16S-104JTH (100 k)	T	193.3/95.5
R5964	7030015970	S.RES	RMC1/16S-103JTH (10 k)	T	192.0/91.4
R5965	7030015990	S.RES	RMC1/16S-683JTH (68 k)	T	194.7/94.5
R5966	7030016390	S.RES	RMC1/16S-184JTH (180 k)	T	193.3/97.3
R5967	7510001511	S.THE	NTCG16 4LH 223JT	T	194.4/97.1
R5968	7030015970	S.RES	RMC1/16S-103JTH (10 k)	T	192.0/92.4
R5971	7030015930	S.RES	RMC1/16S-471JTH (470)	T	198.5/95.5
R5972	7030016040	S.RES	RMC1/16S-224JTH (220 k)	T	198.1/94.1
R5973	7030015970	S.RES	RMC1/16S-103JTH (10 k)	T	197.6/95.5
R5974	7030016100	S.RES	RMC1/16S-334JTH (330 k)	T	196.7/95.5
R5975	7030016110	S.RES	RMC1/16S-473JTH (47 k)	T	197.6/97.6
R5981	7030016050	S.RES	RMC1/16S-102JTH (1 k)	T	203.1/81.3
R5982	7030016050	S.RES	RMC1/16S-102JTH (1 k)	T	203.9/77.8
R5983	7030016020	S.RES	RMC1/16S-104JTH (100 k)	T	203.9/76.9
R5984	7030015960	S.RES	RMC1/16S-472JTH (4.7 k)	T	196.6/84.8
C4001	4030025370	S.CER	GRM033R61C104KE14D	T	102.5/108.7
C4002	4030025370	S.CER	GRM033R61C104KE14D	T	101.5/108.7
C4003	4030025370	S.CER	GRM033R61C104KE14D	T	100.5/108.7
C4004	4030025370	S.CER	GRM033R61C104KE14D	T	99.5/108.7
C4005	4030025370	S.CER	GRM033R61C104KE14D	T	98.5/108.7
C4006	4030025370	S.CER	GRM033R61C104KE14D	T	97.5/108.7
C4007	4030025370	S.CER	GRM033R61C104KE14D	T	96.5/108.7
C4008	4030025370	S.CER	GRM033R61C104KE14D	T	95.5/108.7
C4009	4030025370	S.CER	GRM033R61C104KE14D	T	94.5/108.7
C4010	4030025370	S.CER	GRM033R61C104KE14D	T	93.5/108.7
C4011	4030025370	S.CER	GRM033R61C104KE14D	T	92.5/108.7

Eqv.= This component is equivalent to the REF No. component listed above, and may be substituted on parts orders and repairs.

[MAIN UNIT]

REF NO.	PART NO.	DESCRIPTION		M.	H/V LOCATION
C4012	4030025370	S.CER	GRM033R61C104KE14D	T	135.9/104.8
C4013	4030025370	S.CER	GRM033R61C104KE14D	T	123.0/104.8
C4021	4030022140	S.CER	GRM033B31H102KA12D	T	111.1/111.3
C4023	4030019560	S.CER	GRM21BB31C106KE15L	T	114.4/100.5
C4024	4030022150	S.CER	GRM033B31E103KA12D	T	117.7/100.6
C4035	4030022140	S.CER	GRM033B31H102KA12D	T	104.1/111.3
C4037	4030019560	S.CER	GRM21BB31C106KE15L	T	114.4/102.2
C4038	4030022150	S.CER	GRM033B31E103KA12D	T	117.7/102.1
C4041	4030025370	S.CER	GRM033R61C104KE14D	T	107.9/106.9
C4042	4030025370	S.CER	GRM033R61C104KE14D	T	107.9/102.1
C4051	4030025370	S.CER	GRM033R61C104KE14D	T	97.1/28.2
C4052	4030025370	S.CER	GRM033R61C104KE14D	T	70.1/16.5
C4053	4030025370	S.CER	GRM033R61C104KE14D	T	86.8/25.2
C4054	4030025370	S.CER	GRM033R61C104KE14D	T	90.0/16.6
C4061	4030022140	S.CER	GRM033B31H102KA12D	T	174.1/108.1
C4071	4030025370	S.CER	GRM033R61C104KE14D	T	148.5/107.6
C4072	4030025370	S.CER	GRM033R61C104KE14D	T	174.1/109.4
C4073	4030025370	S.CER	GRM033R61C104KE14D	T	173.2/115.4
C4074	4030025370	S.CER	GRM033R61C104KE14D	T	158.0/106.2
C4075	4510010570	S.ELE	16 CE 470 LX	T	166.1/107.4
C4076	4030025370	S.CER	GRM033R61C104KE14D	T	142.0/107.1
C4078	4030025370	S.CER	GRM033R61C104KE14D	T	157.0/108.7
C4079	4030025700	S.CER	GRM033R71E472KE14D	T	158.0/108.7
C4080	4030025700	S.CER	GRM033R71E472KE14D	T	141.0/107.1
C4081	4030025370	S.CER	GRM033R61C104KE14D	T	138.8/107.1
C4082	4030025370	S.CER	GRM033R61C104KE14D	T	152.6/107.1
C4083	4030025370	S.CER	GRM033R61C104KE14D	T	151.3/106.5
C4084	4030022140	S.CER	GRM033B31H102KA12D	T	147.0/108.7
C4085	4030022140	S.CER	GRM033B31H102KA12D	T	146.0/108.7
C4086	4030022140	S.CER	GRM033B31H102KA12D	T	145.0/108.7
C4087	4030022140	S.CER	GRM033B31H102KA12D	T	144.0/108.7
C4088	4030022140	S.CER	GRM033B31H102KA12D	T	143.0/108.7
C4089	4030022140	S.CER	GRM033B31H102KA12D	T	142.0/108.7
C4090	4030022140	S.CER	GRM033B31H102KA12D	T	141.0/108.7
C4091	4030025370	S.CER	GRM033R61C104KE14D	T	189.2/106.0
C4092	4030022150	S.CER	GRM033B31E103KA12D	T	161.2/101.5
C4101	4030025230	S.CER	TMK107BJ105KAHT	T	191.8/17.5
C4102	4030019560	S.CER	GRM21BB31C106KE15L	T	152.3/96.6
C4103	4030022150	S.CER	GRM033B31E103KA12D	T	151.6/98.0
C4104	4030022150	S.CER	GRM033B31E103KA12D	T	151.6/104.1
C4105	4030025370	S.CER	GRM033R61C104KE14D	T	155.1/98.0
C4143	4030025370	S.CER	GRM033R61C104KE14D	T	152.5/25.1
C4144	4030025370	S.CER	GRM033R61C104KE14D	T	170.9/7.8
C4145	4030025370	S.CER	GRM033R61C104KE14D	T	160.3/21.2
C4146	4030025370	S.CER	GRM033R61C104KE14D	T	147.4/14.1
C4161	4030022150	S.CER	GRM033B31E103KA12D	T	142.7/6.3
C4181	4510010450	S.ELE	EEEFT1C102AP	T	46.1/14.9
C4182	4510010450	S.ELE	EEEFT1C102AP	T	35.3/14.9
C4201	4030025370	S.CER	GRM033R61C104KE14D	T	69.2/14.9
C4202	4030025370	S.CER	GRM033R61C104KE14D	T	76.9/16.3
C4204	4030025370	S.CER	GRM033R61C104KE14D	T	92.2/16.6
C4205	4030025370	S.CER	GRM033R61C104KE14D	T	95.0/16.3
C4206	4030025370	S.CER	GRM033R61C104KE14D	T	83.2/16.1
C4207	4030025370	S.CER	GRM033R61C104KE14D	T	81.1/16.3
C4208	4030025370	S.CER	GRM033R61C104KE14D	T	86.4/16.6
C4261	4030025370	S.CER	GRM033R61C104KE14D	T	183.5/80.5
C4262	4030019560	S.CER	GRM21BB31C106KE15L	T	184.3/78.0
C4263	4030019560	S.CER	GRM21BB31C106KE15L	T	184.3/76.2
C4264	4030019560	S.CER	GRM21BB31C106KE15L	T	184.3/74.5
C4265	4030019560	S.CER	GRM21BB31C106KE15L	T	184.3/72.7
C4266	4030019560	S.CER	GRM21BB31C106KE15L	T	184.3/71.0
C4267	4030025370	S.CER	GRM033R61C104KE14D	T	182.0/70.4
C4268	4030025370	S.CER	GRM033R61C104KE14D	T	176.8/68.5
C4269	4030022150	S.CER	GRM033B31E103KA12D	T	176.5/71.2
C4270	4030022150	S.CER	GRM033B31E103KA12D	T	177.0/73.1
C4271	4030019560	S.CER	GRM21BB31C106KE15L	T	178.1/77.7
C4272	4030019560	S.CER	GRM21BB31C106KE15L	T	176.4/77.7
C4273	4030019560	S.CER	GRM21BB31C106KE15L	T	174.6/77.7
C4274	4030019560	S.CER	GRM21BB31C106KE15L	T	172.9/77.7
C4300	4030019560	S.CER	GRM21BB31C106KE15L	T	108.1/13.9
C4301	4030019560	S.CER	GRM21BB31C106KE15L	T	108.1/12.1
C4302	4030019560	S.CER	GRM21BB31C106KE15L	T	108.1/10.4
C4303	4030019560	S.CER	GRM21BB31C106KE15L	T	108.1/8.6
C4304	4030019560	S.CER	GRM21BB31C106KE15L	T	108.1/6.9
C4322	4030025230	S.CER	TMK107BJ105KAHT	T	177.1/86.3
C4323	4030019560	S.CER	GRM21BB31C106KE15L	T	171.6/87.0
C4331	4030025230	S.CER	TMK107BJ105KAHT	T	179.8/90.1
C4332	4030025230	S.CER	TMK107BJ105KAHT	T	179.8/95.1
C4341	4030025230	S.CER	TMK107BJ105KAHT	T	173.1/95.0
C4342	4030025230	S.CER	TMK107BJ105KAHT	T	177.1/91.7
C4343	4030025230	S.CER	TMK107BJ105KAHT	T	172.1/91.7
C4361	4030025230	S.CER	TMK107BJ105KAHT	T	113.8/18.8
C4362	4030025230	S.CER	TMK107BJ105KAHT	T	115.1/18.8
C4363	4030025230	S.CER	TMK107BJ105KAHT	T	120.4/18.8
C4364	4030025230	S.CER	TMK107BJ105KAHT	T	121.7/18.8
C4371	4030025230	S.CER	TMK107BJ105KAHT	T	184.0/90.1
C4372	4030019560	S.CER	GRM21BB31C106KE15L	T	184.2/95.3
C4381	4030019560	S.CER	GRM21BB31C106KE15L	T	122.8/10.6
C4382	4030025230	S.CER	TMK107BJ105KAHT	T	119.8/12.5
C4383	4030025740	S.CER	GRM033B31C683KE84D	T	112.5/13.0
C4384	4030025230	S.CER	TMK107BJ105KAHT	T	118.5/12.5
C4385	4030019560	S.CER	GRM21BB31C106KE15L	T	119.2/5.5
C4386	4030019560	S.CER	GRM21BB31C106KE15L	T	119.2/9.0
C4387	4030019560	S.CER	GRM21BB31C106KE15L	T	121.0/5.5
C4388	4030019560	S.CER	GRM21BB31C106KE15L	T	121.0/9.0
C4389	4030025370	S.CER	GRM033R61C104KE14D	T	117.8/4.5
C4401	4030024430	S.CER	GRM0332C1H680JA01D	T	1.8/76.5
C4402	4030025850	S.CER	GRM0332C1H820JA01D	T	2.8/76.5
C4403	4030025320	S.CER	GRM0332C1H151JA01D	T	1.8/78.1
C4404	4030025040	S.CER	GRM0332C1H220JA01D	T	2.8/78.1
C4405	4030025850	S.CER	GRM0332C1H820JA01D	T	1.8/79.7
C4406	4030025370	S.CER	GRM033R61C104KE14D	T	2.8/79.7
C4407	4030025370	S.CER	GRM033R61C104KE14D	T	3.6/84.7
C4408	4030025230	S.CER	TMK107BJ105KAHT	T	3.6/85.7
C4409	4030025370	S.CER	GRM033R61C104KE14D	T	6.6/83.3

M.= Mounted side (T: Mounted on the Top side, B: Mounted on the Bottom side)
H/V LOCATION=See the BOARD LAYOUTS for details.

[MAIN UNIT]

REF NO.	PART NO.	DESCRIPTION	M.	H/V LOCATION
C4410	4030025370	S.CER GRM033R61C104KE14D	T	7.7/83.3
C4411	4030025370	S.CER GRM033R61C104KE14D	T	9.0/77.9
C4421	4030025370	S.CER GRM033R61C104KE14D	T	10.1/60.1
C4422	4030025370	S.CER GRM033R61C104KE14D	T	10.1/59.1
C4423	4030025370	S.CER GRM033R61C104KE14D	T	12.2/57.0
C4424	4030025230	S.CER TMK107BJ105KAHT	T	8.6/60.8
C4425	4030025990	S.CER GRM033R71E222KA12D	T	6.9/63.7
C4426	4030022150	S.CER GRM033B31E103KA12D	T	5.8/63.7
C4427	4030026040	S.CER GRM033R71H122KA12D	T	6.9/65.3
C4428	4030025870	S.CER GRM033B31C153KE84D	T	5.8/65.3
C4429	4030025870	S.CER GRM033B31C153KE84D	T	5.8/66.9
C4430	4030025990	S.CER GRM033R71E222KA12D	T	6.9/66.9
C4431	4030025370	S.CER GRM033R61C104KE14D	T	14.0/68.1
C4432	4030025230	S.CER TMK107BJ105KAHT	T	10.1/82.7
C4433	4030024430	S.CER GRM0332C1H680JA01D	T	10.1/85.2
C4434	4030025840	S.CER GRM0332C1H390JA01D	T	14.7/84.9
C4435	4030022090	S.CER GRM0332C1H330JA01D	T	14.7/85.9
C4436	4030025320	S.CER GRM0332C1H151JA01D	T	16.3/85.9
C4437	4030025040	S.CER GRM0332C1H220JA01D	T	16.3/84.9
C4438	4030025850	S.CER GRM0332C1H820JA01D	T	17.6/85.2
C4442	4030025370	S.CER GRM033R61C104KE14D	T	10.7/77.9
C4450	4030025310	S.CER GRM0332C1E102JA01D	T	26.9/69.9
C4451	4030025420	S.CER GRM033R61A105ME15D	T	19.5/79.4
C4452	4030025310	S.CER GRM0332C1E102JA01D	T	19.5/74.4
C4453	4030025440	S.CER GRM0332C1E271JA01D	T	19.5/73.4
C4454	4030025310	S.CER GRM0332C1E102JA01D	T	19.3/69.9
C4455	4030025890	S.CER GRM033B31C473KE84D	T	17.7/69.9
C4456	4030026090	S.CER GRM0332C1E821JA01D	T	19.3/68.9
C4457	4030025310	S.CER GRM0332C1E102JA01D	T	19.5/75.4
C4458	4030025420	S.CER GRM033R61A105ME15D	T	19.5/64.7
C4471	4030025420	S.CER GRM033R61A105ME15D	T	24.1/85.1
C4472	4030026090	S.CER GRM0332C1E821JA01D	T	24.1/81.5
C4473	4030022080	S.CER GRM0332C1H101JA01D	T	24.1/79.5
C4474	4030022080	S.CER GRM0332C1H101JA01D	T	24.1/78.5
C4475	4030026100	S.CER GRM0332C1E681JA01D	T	23.9/74.2
C4476	4030025310	S.CER GRM0332C1E102JA01D	T	22.3/75.2
C4477	4030025310	S.CER GRM0332C1E102JA01D	T	22.3/74.2
C4478	4030025900	S.CER GRM033B31C123KE84D	T	23.9/68.9
C4479	4030026100	S.CER GRM0332C1E681JA01D	T	22.3/68.9
C4480	4030025420	S.CER GRM033R61A105ME15D	T	24.1/64.7
C4481	4030026100	S.CER GRM0332C1E681JA01D	T	24.1/80.5
C4482	4030026090	S.CER GRM0332C1E821JA01D	T	23.9/75.2
C4483	4030026100	S.CER GRM0332C1E681JA01D	T	22.3/73.2
C4485	4030026090	S.CER GRM0332C1E821JA01D	T	22.3/69.9
C4491	4030025420	S.CER GRM033R61A105ME15D	T	28.7/85.1
C4492	4030026080	S.CER GRM0332C1E561JA01D	T	28.7/79.6
C4493	4030025440	S.CER GRM0332C1E271JA01D	T	28.7/80.6
C4494	4030025860	S.CER GRM0332C1H121JA01D	T	28.7/78.6
C4495	4030026080	S.CER GRM0332C1E561JA01D	T	28.5/75.2
C4496	4030026090	S.CER GRM0332C1E821JA01D	T	26.9/74.2
C4497	4030025310	S.CER GRM0332C1E102JA01D	T	30.3/74.2
C4498	4030025310	S.CER GRM0332C1E102JA01D	T	30.3/73.2
C4499	4030025310	S.CER GRM0332C1E102JA01D	T	30.3/72.2
C4501	4030025420	S.CER GRM033R61A105ME15D	T	28.8/64.7
C4502	4030026100	S.CER GRM0332C1E681JA01D	T	26.9/75.2
C4503	4030025310	S.CER GRM0332C1E102JA01D	T	30.3/71.2
C4504	4030025310	S.CER GRM0332C1E102JA01D	T	30.3/68.2
C4505	4030025310	S.CER GRM0332C1E102JA01D	T	30.3/69.2
C4506	4030025310	S.CER GRM0332C1E102JA01D	T	30.3/70.2
C4511	4030025420	S.CER GRM033R61A105ME15D	T	34.8/85.1
C4512	4030026080	S.CER GRM0332C1E561JA01D	T	34.8/79.6
C4513	4030022080	S.CER GRM0332C1H101JA01D	T	34.8/78.6
C4514	4030026070	S.CER GRM0332C1E471JA01D	T	34.6/75.2
C4515	4030025860	S.CER GRM0332C1H121JA01D	T	33.0/75.2
C4516	4030026080	S.CER GRM0332C1E561JA01D	T	33.0/74.2
C4517	4030025310	S.CER GRM0332C1E102JA01D	T	36.4/71.2
C4518	4030025310	S.CER GRM0332C1E102JA01D	T	36.4/72.2
C4519	4030026070	S.CER GRM0332C1E471JA01D	T	33.0/70.0
C4520	4030025420	S.CER GRM033R61A105ME15D	T	34.8/64.7
C4521	4030026100	S.CER GRM0332C1E681JA01D	T	36.4/73.2
C4522	4030026100	S.CER GRM0332C1E681JA01D	T	36.4/74.2
C4531	4030025420	S.CER GRM033R61A105ME15D	T	40.9/85.0
C4532	4030026070	S.CER GRM0332C1E471JA01D	T	40.9/79.6
C4533	4030025680	S.CER GRM0332C1H560JA01D	T	40.9/78.6
C4534	4030025030	S.CER GRM0332C1E331JA01D	T	40.7/75.2
C4535	4030026070	S.CER GRM0332C1E471JA01D	T	39.1/75.2
C4536	4030025310	S.CER GRM0332C1E102JA01D	T	42.5/68.2
C4537	4030025310	S.CER GRM0332C1E102JA01D	T	42.5/69.2
C4538	4030025030	S.CER GRM0332C1E331JA01D	T	39.1/70.0
C4539	4030025420	S.CER GRM033R61A105ME15D	T	40.9/64.7
C4540	4030025310	S.CER GRM0332C1E102JA01D	T	42.5/70.2
C4541	4030025310	S.CER GRM0332C1E102JA01D	T	42.5/71.2
C4542	4030025310	S.CER GRM0332C1E102JA01D	T	42.5/72.2
C4543	4030025310	S.CER GRM0332C1E102JA01D	T	42.5/73.2
C4544	4030025310	S.CER GRM0332C1E102JA01D	T	42.5/74.2
C4551	4030025420	S.CER GRM033R61A105ME15D	T	47.0/85.0
C4552	4030026060	S.CER GRM0332C1E391JA01D	T	47.0/79.6
C4553	4030025840	S.CER GRM0332C1H390JA01D	T	47.0/78.6
C4554	4030025320	S.CER GRM0332C1H151JA01D	T	46.8/74.2
C4555	4030025320	S.CER GRM0332C1H151JA01D	T	46.8/75.2
C4556	4030025310	S.CER GRM0332C1E102JA01D	T	46.8/69.0
C4557	4030025300	S.CER GRM0332C1H221JA01D	T	45.2/70.0
C4558	4030025420	S.CER GRM033R61A105ME15D	T	47.0/64.7
C4559	4030025310	S.CER GRM0332C1E102JA01D	T	46.8/70.0
C4562	4030025440	S.CER GRM0332C1E271JA01D	T	45.2/74.2
C4571	4030025420	S.CER GRM033R61A105ME15D	T	51.5/85.0
C4572	4030024420	S.CER GRM0332C1H180JA01D	T	51.5/79.6
C4573	4030025300	S.CER GRM0332C1H221JA01D	T	51.5/80.6
C4574	4030022120	S.CER GRM0332C1H470JA01D	T	51.5/78.6
C4575	4030025300	S.CER GRM0332C1H221JA01D	T	51.3/75.2
C4576	4030025440	S.CER GRM0332C1E271JA01D	T	49.7/75.2
C4577	4030026090	S.CER GRM0332C1E821JA01D	T	51.3/70.0
C4578	4030025360	S.CER GRM0332C1H181JA01D	T	49.7/70.0
C4579	4030025420	S.CER GRM033R61A105ME15D	T	51.5/64.6
C4580	4030026100	S.CER GRM0332C1E681JA01D	T	51.3/69.0

Eqv.= This component is equivalent to the REF No. component listed above, and may be substituted on parts orders and repairs.

[MAIN UNIT]

REF NO.	PART NO.	DESCRIPTION	M.	H/V LOCATION
C4591	4030025420	S.CER GRM033R61A105ME15D	T	56.0/85.0
C4592	4030022080	S.CER GRM0332C1H101JA01D	T	56.8/79.4
C4593	4030022080	S.CER GRM0332C1H101JA01D	T	56.8/80.4
C4594	4030025040	S.CER GRM0332C1H220JA01D	T	56.8/78.4
C4595	4030025360	S.CER GRM0332C1H181JA01D	T	56.2/74.1
C4596	4030025360	S.CER GRM0332C1H181JA01D	T	54.6/74.1
C4597	4030026090	S.CER GRM0332C1E821JA01D	T	56.2/69.1
C4598	4030025320	S.CER GRM0332C1H151JA01D	T	54.6/69.1
C4599	4030025420	S.CER GRM033R61A105ME15D	T	56.7/63.8
C4600	4030026100	S.CER GRM0332C1E681JA01D	T	56.2/68.1
C4608	4030024430	S.CER GRM0332C1H680JA01D	T	62.1/82.1
C4609	4030025840	S.CER GRM0332C1H390JA01D	T	62.1/81.1
C4610	4030022070	S.CER GRM0333C1H3R0BA01D	T	62.1/79.1
C4611	4030025420	S.CER GRM033R61A105ME15D	T	61.3/85.0
C4612	4030025320	S.CER GRM0332C1H151JA01D	T	62.1/80.1
C4613	4030025680	S.CER GRM0332C1H560JA01D	T	62.1/78.1
C4614	4030024430	S.CER GRM0332C1H680JA01D	T	61.5/74.1
C4615	4030025320	S.CER GRM0332C1H151JA01D	T	59.9/74.1
C4616	4030026080	S.CER GRM0332C1E561JA01D	T	61.5/69.1
C4617	4030022080	S.CER GRM0332C1H101JA01D	T	59.9/69.1
C4618	4030025420	S.CER GRM033R61A105ME15D	T	62.0/63.8
C4631	4030025230	S.CER TMK107BJ105KAHT	T	68.8/62.5
C4632	4030025370	S.CER GRM033R61C104KE14D	T	77.9/59.3
C4633	4030025230	S.CER TMK107BJ105KAHT	T	77.6/57.8
C4634	4030025370	S.CER GRM033R61C104KE14D	T	107.7/50.5
C4635	4030025370	S.CER GRM033R61C104KE14D	T	88.8/68.2
C4636	4030025230	S.CER TMK107BJ105KAHT	T	75.6/59.4
C4640	4030025230	S.CER TMK107BJ105KAHT	T	65.9/68.7
C4641	4030025370	S.CER GRM033R61C104KE14D	T	80.9/75.7
C4642	4030025370	S.CER GRM033R61C104KE14D	T	74.2/65.9
C4643	4030019560	S.CER GRM21BB31C106KE15L	T	73.3/62.8
C4644	4030025370	S.CER GRM033R61C104KE14D	T	74.0/64.4
C4645	4030025290	S.CER GRM0332C1H150JA01D	T	70.9/68.3
C4646	4030025370	S.CER GRM033R61C104KE14D	T	90.4/61.9
C4647	4030025370	S.CER GRM033R61C104KE14D	T	77.7/74.7
C4648	4030025370	S.CER GRM033R61C104KE14D	T	83.0/66.2
C4649	4030025370	S.CER GRM033R61C104KE14D	T	83.0/67.8
C4650	4030025370	S.CER GRM033R61C104KE14D	T	99.3/55.4
C4661	4030025370	S.CER GRM033R61C104KE14D	T	62.7/57.4
C4662	4030025370	S.CER GRM033R61C104KE14D	T	68.1/56.7
C4663	4030025370	S.CER GRM033R61C104KE14D	T	71.8/55.8
C4664	4030025370	S.CER GRM033R61C104KE14D	T	62.7/55.9
C4665	4030025370	S.CER GRM033R61C104KE14D	T	71.8/52.6
C4666	4030025370	S.CER GRM033R61C104KE14D	T	68.4/51.6
C4667	4030025370	S.CER GRM033R61C104KE14D	T	73.9/53.7
C4668	4030025370	S.CER GRM033R61C104KE14D	T	72.8/51.6
C4669	4030025230	S.CER TMK107BJ105KAHT	T	71.2/47.1
C4670	4030025370	S.CER GRM033R61C104KE14D	T	68.4/50.6
C4671	4030025370	S.CER GRM033R61C104KE14D	T	81.6/55.2
C4672	4030025370	S.CER GRM033R61C104KE14D	T	76.1/50.0
C4673	4030025370	S.CER GRM033R61C104KE14D	T	75.6/55.2
C4674	4030025370	S.CER GRM033R61C104KE14D	T	76.2/45.7
C4675	4030025370	S.CER GRM033R61C104KE14D	T	80.6/55.2
C4676	4030025370	S.CER GRM033R61C104KE14D	T	81.7/50.3
C4677	4030025370	S.CER GRM033R61C104KE14D	T	85.3/55.2
C4679	4030025370	S.CER GRM033R61C104KE14D	T	89.9/46.1
C4680	4030025370	S.CER GRM033R61C104KE14D	T	90.4/55.2
C4681	4030025370	S.CER GRM033R61C104KE14D	T	90.6/51.4
C4685	4030019560	S.CER GRM21BB31C106KE15L	T	102.5/44.5
C4689	4030025370	S.CER GRM033R61C104KE14D	T	93.7/46.5
C4690	4030022160	S.CER GRM033B31A104KE84D	T	92.0/54.6
C4691	4030019560	S.CER GRM21BB31C106KE15L	T	107.7/44.5
C4692	4030019560	S.CER GRM21BB31C106KE15L	T	100.0/48.5
C4695	4030025370	S.CER GRM033R61C104KE14D	T	68.5/63.9
C4697	4030025370	S.CER GRM033R61C104KE14D	T	88.5/69.6
C4701	4030022100	S.CER GRM0332C1H100JA01D	T	15.5/105.1
C4702	4030025290	S.CER GRM0332C1H150JA01D	T	15.5/106.7
C4703	4030025370	S.CER GRM033R61C104KE14D	T	1.7/92.8
C4704	4030025700	S.CER GRM033R71E472KE14D	T	13.4/101.1
C4705	4030025890	S.CER GRM033B31C473KE84D	T	15.9/97.6
C4706	4030025370	S.CER GRM033R61C104KE14D	T	14.2/98.3
C4708	4030024430	S.CER GRM0332C1H680JA01D	T	2.0/88.5
C4709	4030025850	S.CER GRM0332C1H820JA01D	T	3.5/88.5
C4710	4030025320	S.CER GRM0332C1H151JA01D	T	5.0/88.5
C4711	4030024420	S.CER GRM0332C1H180JA01D	T	6.4/92.2
C4712	4030025850	S.CER GRM0332C1H820JA01D	T	6.4/91.2
C4713	4030025320	S.CER GRM0332C1H151JA01D	T	6.4/90.2
C4715	4030022090	S.CER GRM0332C1H330JA01D	T	8.0/92.2
C4716	4030025440	S.CER GRM0332C1E271JA01D	T	8.0/90.2
C4717	4030024430	S.CER GRM0332C1H680JA01D	T	9.6/91.2
C4718	4030025440	S.CER GRM0332C1E271JA01D	T	9.6/90.2
C4719	4030025370	S.CER GRM033R61C104KE14D	T	17.1/91.2
C4720	4030025370	S.CER GRM033R61C104KE14D	T	13.4/102.7
C4721	4030025370	S.CER GRM033R61C104KE14D	T	7.0/97.2
C4722	4030025680	S.CER GRM0332C1H560JA01D	T	11.2/91.2
C4723	4030025320	S.CER GRM0332C1H151JA01D	T	11.2/90.2
C4731	4030025370	S.CER GRM033R61C104KE14D	T	20.4/94.1
C4732	4030025420	S.CER GRM033R61A105ME15D	T	22.3/90.4
C4733	4030025310	S.CER GRM0332C1E102JA01D	T	22.4/94.1
C4734	4030026090	S.CER GRM0332C1E821JA01D	T	19.4/99.7
C4735	4030025310	S.CER GRM0332C1E102JA01D	T	20.4/99.7
C4736	4030026090	S.CER GRM0332C1E821JA01D	T	19.4/105.9
C4737	4030025310	S.CER GRM0332C1E102JA01D	T	20.4/105.9
C4738	4030025370	S.CER GRM033R61C104KE14D	T	23.1/113.2
C4739	4030025420	S.CER GRM033R61A105ME15D	T	24.1/117.0
C4740	4030025310	S.CER GRM0332C1E102JA01D	T	23.4/94.1
C4741	4030025310	S.CER GRM0332C1E102JA01D	T	21.4/94.1
C4742	4030025310	S.CER GRM0332C1E102JA01D	T	21.4/99.7
C4743	4030025310	S.CER GRM0332C1E102JA01D	T	22.4/99.7
C4744	4030025310	S.CER GRM0332C1E102JA01D	T	23.4/99.7
C4745	4030025310	S.CER GRM0332C1E102JA01D	T	22.4/104.3
C4746	4030025310	S.CER GRM0332C1E102JA01D	T	21.4/104.3
C4747	4030025310	S.CER GRM0332C1E102JA01D	T	20.4/104.3
C4748	4030025310	S.CER GRM0332C1E102JA01D	T	21.4/105.9
C4749	4030025310	S.CER GRM0332C1E102JA01D	T	22.4/105.9

M.= Mounted side (T: Mounted on the Top side, B: Mounted on the Bottom side)
H/V LOCATION=See the BOARD LAYOUTS for details.

[MAIN UNIT]

REF NO.	PART NO.	DESCRIPTION	M.	H/V LOCATION
C4751	4030025370	S.CER GRM033R61C104KE14D	T	27.9/94.1
C4752	4030025420	S.CER GRM033R61A105ME15D	T	29.7/90.4
C4753	4030025310	S.CER GRM0332C1E102JA01D	T	28.9/94.1
C4754	4030022080	S.CER GRM0332C1H101JA01D	T	25.9/99.7
C4755	4030025310	S.CER GRM0332C1E102JA01D	T	26.9/99.7
C4756	4030022080	S.CER GRM0332C1H101JA01D	T	26.9/105.4
C4757	4030025310	S.CER GRM0332C1E102JA01D	T	27.9/105.4
C4758	4030025370	S.CER GRM033R61C104KE14D	T	29.4/112.6
C4759	4030025420	S.CER GRM033R61A105ME15D	T	30.3/116.1
C4760	4030025310	S.CER GRM0332C1E102JA01D	T	30.9/94.1
C4761	4030025310	S.CER GRM0332C1E102JA01D	T	29.9/94.1
C4762	4030025310	S.CER GRM0332C1E102JA01D	T	27.9/99.7
C4763	4030025310	S.CER GRM0332C1E102JA01D	T	28.9/99.7
C4764	4030025310	S.CER GRM0332C1E102JA01D	T	29.9/99.7
C4765	4030025310	S.CER GRM0332C1E102JA01D	T	30.9/99.7
C4766	4030025310	S.CER GRM0332C1E102JA01D	T	28.9/105.4
C4767	4030025310	S.CER GRM0332C1E102JA01D	T	29.9/105.4
C4771	4030025370	S.CER GRM033R61C104KE14D	T	35.4/94.1
C4772	4030025420	S.CER GRM033R61A105ME15D	T	37.3/90.4
C4773	4030025310	S.CER GRM0332C1E102JA01D	T	37.4/94.1
C4774	4030025680	S.CER GRM0332C1H560JA01D	T	34.4/99.7
C4775	4030025310	S.CER GRM0332C1E102JA01D	T	35.4/99.7
C4776	4030025680	S.CER GRM0332C1H560JA01D	T	34.4/105.9
C4777	4030025310	S.CER GRM0332C1E102JA01D	T	36.4/105.9
C4778	4030025370	S.CER GRM033R61C104KE14D	T	33.9/111.2
C4779	4030025420	S.CER GRM033R61A105ME15D	T	37.5/114.8
C4780	4030025310	S.CER GRM0332C1E102JA01D	T	36.4/94.1
C4781	4030025310	S.CER GRM0332C1E102JA01D	T	36.4/99.7
C4782	4030025310	S.CER GRM0332C1E102JA01D	T	37.4/99.7
C4783	4030025310	S.CER GRM0332C1E102JA01D	T	35.4/105.9
C4791	4030025370	S.CER GRM033R61C104KE14D	T	42.9/94.1
C4792	4030025420	S.CER GRM033R61A105ME15D	T	44.8/90.4
C4793	4030026090	S.CER GRM0332C1E821JA01D	T	44.9/94.1
C4794	4030025360	S.CER GRM0332C1H181JA01D	T	41.7/99.0
C4795	4030025860	S.CER GRM0332C1H121JA01D	T	40.7/99.0
C4796	4030025310	S.CER GRM0332C1E102JA01D	T	46.2/99.8
C4797	4030025360	S.CER GRM0332C1H181JA01D	T	41.7/105.6
C4798	4030025860	S.CER GRM0332C1H121JA01D	T	40.7/105.6
C4799	4030026090	S.CER GRM0332C1E821JA01D	T	45.4/107.4
C4800	4030025670	S.CER GRM0332C1H270JA01D	T	44.0/111.9
C4801	4030025680	S.CER GRM0332C1H560JA01D	T	45.3/112.2
C4802	4030025370	S.CER GRM033R61C104KE14D	T	42.7/114.1
C4803	4030025420	S.CER GRM033R61A105ME15D	T	44.8/117.5
C4804	4030026100	S.CER GRM0332C1E681JA01D	T	43.9/94.1
C4805	4030026090	S.CER GRM0332C1E821JA01D	T	46.2/100.8
C4806	4030026100	S.CER GRM0332C1E681JA01D	T	45.4/106.4
C4811	4030025420	S.CER GRM033R61A105ME15D	T	53.7/92.6
C4812	4030025370	S.CER GRM033R61C104KE14D	T	50.7/96.3
C4814	4030026100	S.CER GRM0332C1E681JA01D	T	52.7/94.9
C4815	4030026100	S.CER GRM0332C1E681JA01D	T	53.7/94.9
C4816	4030022100	S.CER GRM0332C1H100JA01D	T	50.3/100.1
C4817	4030024420	S.CER GRM0332C1H180JA01D	T	49.3/100.1
C4818	4030025300	S.CER GRM0332C1H221JA01D	T	51.3/100.1
C4819	4030025310	S.CER GRM0332C1E102JA01D	T	52.4/104.1
C4820	4030025310	S.CER GRM0332C1E102JA01D	T	52.4/105.1
C4821	4030022100	S.CER GRM0332C1H100JA01D	T	49.2/106.1
C4822	4030024420	S.CER GRM0332C1H180JA01D	T	49.2/105.1
C4823	4030025320	S.CER GRM0332C1H151JA01D	T	50.8/106.1
C4825	4030026100	S.CER GRM0332C1E681JA01D	T	52.9/110.2
C4826	4030026100	S.CER GRM0332C1E681JA01D	T	52.9/108.2
C4827	4030025840	S.CER GRM0332C1H390JA01D	T	51.1/110.9
C4828	4030025850	S.CER GRM0332C1H820JA01D	T	52.9/111.2
C4829	4030025440	S.CER GRM0332C1E271JA01D	T	49.8/113.1
C4830	4030025420	S.CER GRM033R61A105ME15D	T	53.0/116.5
C4831	4030026090	S.CER GRM0332C1E821JA01D	T	51.7/94.9
C4832	4030026090	S.CER GRM0332C1E821JA01D	T	52.9/109.2
C4841	4030025420	S.CER GRM033R61A105ME15D	T	61.6/92.6
C4842	4030022120	S.CER GRM0332C1H470JA01D	T	58.3/96.3
C4844	4030026080	S.CER GRM0332C1E561JA01D	T	60.6/94.9
C4847	4030022120	S.CER GRM0332C1H470JA01D	T	56.5/100.1
C4848	4030025320	S.CER GRM0332C1H151JA01D	T	59.5/100.1
C4850	4030026100	S.CER GRM0332C1E681JA01D	T	60.0/106.1
C4852	4030022100	S.CER GRM0332C1H100JA01D	T	56.8/105.1
C4853	4030024430	S.CER GRM0332C1H680JA01D	T	56.8/106.1
C4854	4030024430	S.CER GRM0332C1H680JA01D	T	58.4/105.1
C4856	4030026100	S.CER GRM0332C1E681JA01D	T	61.0/110.3
C4858	4030024420	S.CER GRM0332C1H180JA01D	T	59.7/111.0
C4859	4030024420	S.CER GRM0332C1H180JA01D	T	61.0/111.3
C4860	4030025370	S.CER GRM033R61C104KE14D	T	58.4/113.1
C4861	4030025420	S.CER GRM033R61A105ME15D	T	60.6/116.7
C4862	4030025370	S.CER GRM033R61C104KE14D	T	60.6/115.7
C4863	4030024420	S.CER GRM0332C1H180JA01D	T	58.7/111.0
C4864	4030025040	S.CER GRM0332C1H220JA01D	T	23.1/111.6
C4865	4030024430	S.CER GRM0332C1H680JA01D	T	24.1/111.6
C4866	4030024430	S.CER GRM0332C1H680JA01D	T	24.1/113.2
C4867	4030025040	S.CER GRM0332C1H220JA01D	T	29.4/111.0
C4868	4030024430	S.CER GRM0332C1H680JA01D	T	30.4/111.0
C4869	4030024430	S.CER GRM0332C1H680JA01D	T	30.4/112.6
C4871	4030025370	S.CER GRM033R61C104KE14D	T	66.3/111.0
C4872	4030025370	S.CER GRM033R61C104KE14D	T	70.2/103.6
C4873	4030025370	S.CER GRM033R61C104KE14D	T	71.6/103.9
C4874	4030025370	S.CER GRM033R61C104KE14D	T	115.1/98.1
C4875	4030025370	S.CER GRM033R61C104KE14D	T	87.8/96.8
C4881	4030025370	S.CER GRM033R61C104KE14D	T	80.2/114.7
C4882	4030025370	S.CER GRM033R61C104KE14D	T	78.2/108.3
C4883	4030019560	S.CER GRM21BB31C106KE15L	T	75.0/109.1
C4884	4030025370	S.CER GRM033R61C104KE14D	T	76.4/108.1
C4885	4030025290	S.CER GRM0332C1H150JA01D	T	81.8/111.2
C4886	4030025370	S.CER GRM033R61C104KE14D	T	74.8/92.2
C4887	4030025370	S.CER GRM033R61C104KE14D	T	86.2/106.5
C4888	4030025370	S.CER GRM033R61C104KE14D	T	79.6/99.5
C4889	4030025370	S.CER GRM033R61C104KE14D	T	81.2/99.5
C4890	4030025370	S.CER GRM033R61C104KE14D	T	111.6/94.0
C4901	4030025370	S.CER GRM033R61C104KE14D	T	186.9/60.4
C4902	4030025370	S.CER GRM033R61C104KE14D	T	179.2/60.5

Eqv.= This component is equivalent to the REF No. component listed above, and may be substituted on parts orders and repairs.

[MAIN UNIT]

REF NO.	PART NO.	DESCRIPTION	M.	H/V LOCATION
C4903	4030025370	S.CER GRM033R61C104KE14D	T	174.9/60.4
C4904	4030025370	S.CER GRM033R61C104KE14D	T	169.2/60.4
C4905	4030025370	S.CER GRM033R61C104KE14D	T	162.3/53.4
C4906	4030025370	S.CER GRM033R61C104KE14D	T	162.3/49.5
C4907	4030025370	S.CER GRM033R61C104KE14D	T	162.3/46.8
C4908	4030025370	S.CER GRM033R61C104KE14D	T	162.3/38.4
C4909	4030025370	S.CER GRM033R61C104KE14D	T	168.2/30.6
C4910	4030025370	S.CER GRM033R61C104KE14D	T	175.2/30.6
C4911	4030025370	S.CER GRM033R61C104KE14D	T	179.6/30.6
C4912	4030025370	S.CER GRM033R61C104KE14D	T	185.2/30.6
C4913	4550007390	S.TAN F931C225MAABMA	T	185.9/28.2
C4914	4030019560	S.CER GRM21BB31C106KE15L	T	190.9/29.3
C4915	4030025370	S.CER GRM033R61C104KE14D	T	192.3/29.7
C4916	4030025370	S.CER GRM033R61C104KE14D	T	192.1/34.6
C4917	4030025370	S.CER GRM033R61C104KE14D	T	192.1/41.4
C4918	4030025370	S.CER GRM033R61C104KE14D	T	192.1/46.9
C4919	4550007390	S.TAN F931C225MAABMA	T	194.4/55.0
C4920	4030025370	S.CER GRM033R61C104KE14D	T	192.1/53.5
C4921	4030022100	S.CER GRM0332C1H100JA01D	T	159.7/37.8
C4922	4030022100	S.CER GRM0332C1H100JA01D	T	160.7/37.8
C4925	4030025370	S.CER GRM033R61C104KE14D	T	147.8/42.7
C4926	4030022080	S.CER GRM0332C1H101JA01D	T	184.8/60.7
C4927	4030025300	S.CER GRM0332C1H221JA01D	T	182.2/60.7
C5001	4030025370	S.CER GRM033R61C104KE14D	T	169.4/24.5
C5011	4030022140	S.CER GRM033B31H102KA12D	T	193.6/24.1
C5012	4030022140	S.CER GRM033B31H102KA12D	T	190.5/25.7
C5013	4030026020	S.CER GRM033R71E272KA12D	T	193.6/21.9
C5051	4030025370	S.CER GRM033R61C104KE14D	T	140.1/99.7
C5061	4030025370	S.CER GRM033R61C104KE14D	T	129.3/97.5
C5062	4030025370	S.CER GRM033R61C104KE14D	T	71.3/87.6
C5063	4030025370	S.CER GRM033R61C104KE14D	T	81.8/89.4
C5064	4030025370	S.CER GRM033R61C104KE14D	T	77.0/114.3
C5081	4030025370	S.CER GRM033R61C104KE14D	T	209.8/44.7
C5101	4030022160	S.CER GRM033B31A104KE84D	T	200.7/117.5
C5102	4030022160	S.CER GRM033B31A104KE84D	T	204.3/108.6
C5103	4030022160	S.CER GRM033B31A104KE84D	T	201.7/117.5
C5104	4030022140	S.CER GRM033B31H102KA12D	T	200.0/108.6
C5105	4030025370	S.CER GRM033R61C104KE14D	T	207.9/59.6
C5121	4030022150	S.CER GRM033B31E103KA12D	T	131.9/81.2
C5122	4030022160	S.CER GRM033B31A104KE84D	T	130.9/81.2
C5131	4030022160	S.CER GRM033B31A104KE84D	T	158.3/71.8
C5132	4030022160	S.CER GRM033B31A104KE84D	T	136.5/63.3
C5133	4030022150	S.CER GRM033B31E103KA12D	T	157.3/71.8
C5134	4030022150	S.CER GRM033B31E103KA12D	T	136.5/64.3
C5135	4030019560	S.CER GRM21BB31C106KE15L	T	162.5/72.7
C5142	4030022160	S.CER GRM033B31A104KE84D	T	147.4/62.8
C5143	4030022150	S.CER GRM033B31E103KA12D	T	147.4/63.8
C5151	4030022150	S.CER GRM033B31E103KA12D	T	150.3/89.7
C5152	4030022160	S.CER GRM033B31A104KE84D	T	150.3/90.7
C5155	4030022160	S.CER GRM033B31A104KE84D	T	130.7/78.7
C5156	4030022150	S.CER GRM033B31E103KA12D	T	131.9/78.7
C5157	4030019560	S.CER GRM21BB31C106KE15L	T	129.3/78.0
C5161	4030022160	S.CER GRM033B31A104KE84D	T	164.2/89.3
C5162	4030025230	S.CER TMK107BJ105KAHT	T	93.9/100.8
C5164	4030022160	S.CER GRM033B31A104KE84D	T	85.5/69.2
C5165	4030022150	S.CER GRM033B31E103KA12D	T	164.2/88.1
C5166	4030022160	S.CER GRM033B31A104KE84D	T	85.5/75.3
C5167	4030022160	S.CER GRM033B31A104KE84D	T	85.5/74.3
C5168	4030025230	S.CER TMK107BJ105KAHT	T	90.4/74.8
C5169	4030022160	S.CER GRM033B31A104KE84D	T	94.6/73.7
C5170	4030019560	S.CER GRM21BB31C106KE15L	T	131.3/91.1
C5171	4510007280	S.ELE 50 CE 2R2 BS	T	98.5/101.8
C5172	4030025230	S.CER TMK107BJ105KAHT	T	93.9/99.5
C5181	4030019560	S.CER GRM21BB31C106KE15L	T	107.2/75.2
C5182	4030022160	S.CER GRM033B31A104KE84D	T	106.6/83.8
C5183	4030022160	S.CER GRM033B31A104KE84D	T	106.3/76.8
C5184	4030022140	S.CER GRM033B31H102KA12D	T	106.6/82.8
C5185	4030022140	S.CER GRM033B31H102KA12D	T	106.3/77.8
C5186	4030022160	S.CER GRM033B31A104KE84D	T	104.7/77.8
C5187	4030022140	S.CER GRM033B31H102KA12D	T	104.1/82.8
C5188	4030022160	S.CER GRM033B31A104KE84D	T	104.1/83.8
C5189	4030022120	S.CER GRM0332C1H470JA01D	T	109.2/80.1
C5191	4030025350	S.CER GRM0332C1H120JA01D	T	84.9/82.5
C5192	4030025840	S.CER GRM0332C1H390JA01D	T	84.9/80.9
C5193	4030025800	S.CER GRM0335C1H1R5WA01D	T	88.9/82.5
C5194	4030025840	S.CER GRM0332C1H390JA01D	T	88.9/80.9
C5195	4030025350	S.CER GRM0332C1H120JA01D	T	93.0/82.5
C5196	4030022140	S.CER GRM033B31H102KA12D	T	94.0/82.5
C5201	4030022160	S.CER GRM033B31A104KE84D	T	120.6/87.8
C5202	4030022160	S.CER GRM033B31A104KE84D	T	120.6/86.2
C5203	4030022160	S.CER GRM033B31A104KE84D	T	120.6/85.6
C5204	4030022160	S.CER GRM033B31A104KE84D	T	120.6/84.0
C5205	4030022160	S.CER GRM033B31A104KE84D	T	123.2/81.4
C5206	4030022160	S.CER GRM033B31A104KE84D	T	124.2/81.4
C5207	4030022160	S.CER GRM033B31A104KE84D	T	121.7/91.2
C5208	4030022160	S.CER GRM033B31A104KE84D	T	122.2/81.4
C5209	4030022160	S.CER GRM033B31A104KE84D	T	126.7/91.2
C5210	4030022160	S.CER GRM033B31A104KE84D	T	126.2/81.4
C5211	4030022160	S.CER GRM033B31A104KE84D	T	125.8/91.2
C5212	4030025230	S.CER TMK107BJ105KAHT	T	124.7/91.8
C5213	4030022160	S.CER GRM033B31A104KE84D	T	123.6/91.2
C5222	4030022160	S.CER GRM033B31A104KE84D	T	88.5/101.7
C5224	4030022160	S.CER GRM033B31A104KE84D	T	91.6/104.3
C5225	4030022160	S.CER GRM033B31A104KE84D	T	91.6/101.7
C5226	4030025230	S.CER TMK107BJ105KAHT	T	93.1/96.8
C5227	4030022160	S.CER GRM033B31A104KE84D	T	88.1/92.6
C5231	4030025350	S.CER GRM0332C1H120JA01D	T	84.9/85.9
C5232	4030025840	S.CER GRM0332C1H390JA01D	T	84.9/87.5
C5233	4030025800	S.CER GRM0335C1H1R5WA01D	T	88.9/85.9
C5234	4030025840	S.CER GRM0332C1H390JA01D	T	88.9/87.5
C5235	4030025350	S.CER GRM0332C1H120JA01D	T	93.0/85.9
C5236	4030022140	S.CER GRM033B31H102KA12D	T	94.0/85.9
C5241	4030019560	S.CER GRM21BB31C106KE15L	T	107.2/86.6
C5242	4030022160	S.CER GRM033B31A104KE84D	T	104.3/95.3
C5243	4030022160	S.CER GRM033B31A104KE84D	T	106.3/88.2

M.= Mounted side (T: Mounted on the Top side, B: Mounted on the Bottom side)
H/V LOCATION=See the BOARD LAYOUTS for details.

[MAIN UNIT]

REF NO.	PART NO.	DESCRIPTION	M.	H/V LOCATION
C5244	4030022140	S.CER GRM033B31H102KA12D	T	104.3/94.3
C5245	4030022140	S.CER GRM033B31H102KA12D	T	106.3/89.2
C5246	4030022160	S.CER GRM033B31A104KE84D	T	104.7/89.2
C5247	4030022140	S.CER GRM033B31H102KA12D	T	106.8/94.3
C5248	4030022160	S.CER GRM033B31A104KE84D	T	106.8/95.3
C5249	4030022120	S.CER GRM0332C1H470JA01D	T	109.3/91.8
C5282	4030022120	S.CER GRM0332C1H470JA01D	T	96.3/55.2
C5283	4030025850	S.CER GRM0332C1H820JA01D	T	96.3/56.8
C5284	4030025320	S.CER GRM0332C1H151JA01D	T	96.3/58.4
C5285	4030022090	S.CER GRM0332C1H330JA01D	T	96.3/60.0
C5286	4030025850	S.CER GRM0332C1H820JA01D	T	96.3/62.2
C5287	4030022160	S.CER GRM033B31A104KE84D	T	118.9/68.8
C5288	4030022160	S.CER GRM033B31A104KE84D	T	118.9/67.8
C5289	4030022160	S.CER GRM033B31A104KE84D	T	118.9/66.2
C5290	4030019560	S.CER GRM21BB31C106KE15L	T	119.9/63.7
C5291	4030019560	S.CER GRM21BB31C106KE15L	T	123.4/63.7
C5292	4030022160	S.CER GRM033B31A104KE84D	T	118.9/73.3
C5301	4030022160	S.CER GRM033B31A104KE84D	T	136.6/90.7
C5302	4030022160	S.CER GRM033B31A104KE84D	T	144.9/90.7
C5303	4030022160	S.CER GRM033B31A104KE84D	T	141.4/90.7
C5305	4030022150	S.CER GRM033B31E103KA12D	T	136.6/89.7
C5306	4030022150	S.CER GRM033B31E103KA12D	T	144.9/89.7
C5307	4030022150	S.CER GRM033B31E103KA12D	T	141.4/89.7
C5309	4030019560	S.CER GRM21BB31C106KE15L	T	137.5/92.4
C5310	4030022080	S.CER GRM0332C1H101JA01D	T	145.5/59.8
C5321	4030022140	S.CER GRM033B31H102KA12D	T	157.3/77.2
C5322	4030022140	S.CER GRM033B31H102KA12D	T	143.0/89.7
C5323	4030022140	S.CER GRM033B31H102KA12D	T	131.9/77.1
C5324	4030022140	S.CER GRM033B31H102KA12D	T	147.4/89.7
C5326	4030022160	S.CER GRM033B31A104KE84D	T	158.3/77.2
C5327	4030022160	S.CER GRM033B31A104KE84D	T	143.0/90.7
C5328	4030022160	S.CER GRM033B31A104KE84D	T	130.7/77.1
C5329	4030022160	S.CER GRM033B31A104KE84D	T	147.4/90.8
C5334	4030019560	S.CER GRM21BB31C106KE15L	T	159.7/77.6
C5335	4510008110	S.ELE 16 CE 22 BS	T	164.3/78.7
C5341	4030022150	S.CER GRM033B31E103KA12D	T	157.3/70.2
C5342	4030022150	S.CER GRM033B31E103KA12D	T	134.9/64.3
C5343	4030022150	S.CER GRM033B31E103KA12D	T	138.2/89.7
C5344	4030022150	S.CER GRM033B31E103KA12D	T	157.3/87.7
C5345	4030022160	S.CER GRM033B31A104KE84D	T	158.3/70.2
C5346	4030022160	S.CER GRM033B31A104KE84D	T	134.9/63.3
C5347	4030022160	S.CER GRM033B31A104KE84D	T	138.2/90.7
C5348	4030022160	S.CER GRM033B31A104KE84D	T	158.3/87.7
C5349	4030019560	S.CER GRM21BB31C106KE15L	T	165.0/69.8
C5351	4030022150	S.CER GRM033B31E103KA12D	T	157.3/75.0
C5352	4030022150	S.CER GRM033B31E103KA12D	T	157.3/81.4
C5353	4030022150	S.CER GRM033B31E103KA12D	T	135.0/89.7
C5354	4030022160	S.CER GRM033B31A104KE84D	T	158.2/75.0
C5355	4030022160	S.CER GRM033B31A104KE84D	T	158.3/81.4
C5356	4030022160	S.CER GRM033B31A104KE84D	T	135.0/90.7
C5357	4030019560	S.CER GRM21BB31C106KE15L	T	159.6/74.0
C5358	4030022140	S.CER GRM033B31H102KA12D	T	157.3/68.6
C5359	4030022160	S.CER GRM033B31A104KE84D	T	158.3/68.6
C5360	4030019560	S.CER GRM21BB31C106KE15L	T	159.7/67.9
C5361	4030022140	S.CER GRM033B31H102KA12D	T	157.3/83.8
C5362	4030022140	S.CER GRM033B31H102KA12D	T	157.3/73.4
C5363	4030022160	S.CER GRM033B31A104KE84D	T	158.3/83.8
C5364	4030022160	S.CER GRM033B31A104KE84D	T	158.2/73.4
C5365	4030019560	S.CER GRM21BB31C106KE15L	T	161.4/84.8
C5371	4030019560	S.CER GRM21BB31C106KE15L	T	159.7/85.4
C5372	4030022160	S.CER GRM033B31A104KE84D	T	158.3/86.1
C5373	4030022150	S.CER GRM033B31E103KA12D	T	157.3/86.1
C5374	4030022150	S.CER GRM033B31E103KA12D	T	138.1/64.3
C5375	4030022150	S.CER GRM033B31E103KA12D	T	144.6/64.3
C5376	4030022160	S.CER GRM033B31A104KE84D	T	138.1/63.3
C5377	4030022160	S.CER GRM033B31A104KE84D	T	144.6/63.3
C5381	4030022150	S.CER GRM033B31E103KA12D	T	133.4/89.7
C5382	4030022160	S.CER GRM033B31A104KE84D	T	133.4/90.7
C5383	4030022150	S.CER GRM033B31E103KA12D	T	139.8/89.7
C5384	4030022160	S.CER GRM033B31A104KE84D	T	139.8/90.7
C5385	4030019560	S.CER GRM21BB31C106KE15L	T	134.0/92.4
C5391	4030022150	S.CER GRM033B31E103KA12D	T	157.3/66.9
C5392	4030022160	S.CER GRM033B31A104KE84D	T	158.3/66.9
C5393	4030019560	S.CER GRM21BB31C106KE15L	T	161.7/67.0
C5401	4030022160	S.CER GRM033B31A104KE84D	T	148.5/53.9
C5421	4030022150	S.CER GRM033B31E103KA12D	T	120.8/42.9
C5422	4030022160	S.CER GRM033B31A104KE84D	T	117.9/40.2
C5423	4030022140	S.CER GRM033B31H102KA12D	T	117.9/41.2
C5424	4030022160	S.CER GRM033B31A104KE84D	T	117.9/39.2
C5425	4030022140	S.CER GRM033B31H102KA12D	T	117.3/46.5
C5426	4030022100	S.CER GRM0332C1H100JA01D	T	118.3/46.5
C5428	4030022160	S.CER GRM033B31A104KE84D	T	117.3/50.0
C5429	4030022160	S.CER GRM033B31A104KE84D	T	116.3/50.0
C5441	4030022150	S.CER GRM033B31E103KA12D	T	118.0/51.6
C5442	4030022160	S.CER GRM033B31A104KE84D	T	119.9/54.9
C5451	4030022150	S.CER GRM033B31E103KA12D	T	118.6/60.3
C5461	4030022160	S.CER GRM033B31A104KE84D	T	124.7/60.6
C5481	4030022150	S.CER GRM033B31E103KA12D	T	124.7/39.0
C5482	4030022160	S.CER GRM033B31A104KE84D	T	123.7/39.0
C5483	4030022140	S.CER GRM033B31H102KA12D	T	122.7/39.0
C5484	4030022160	S.CER GRM033B31A104KE84D	T	121.7/39.0
C5485	4030022140	S.CER GRM033B31H102KA12D	T	123.2/46.5
C5486	4030022100	S.CER GRM0332C1H100JA01D	T	124.2/46.5
C5488	4030022160	S.CER GRM033B31A104KE84D	T	123.2/50.0
C5489	4030022160	S.CER GRM033B31A104KE84D	T	122.2/50.0
C5490	4030022150	S.CER GRM033B31E103KA12D	T	123.9/51.6
C5491	4030022160	S.CER GRM033B31A104KE84D	T	126.1/54.9
C5492	4030025230	S.CER TMK107BJ105KAHT	T	116.4/39.3
C5501	4030025230	S.CER TMK107BJ105KAHT	T	87.5/37.3
C5502	4030019560	S.CER GRM21BB31C106KE15L	T	94.8/34.8
C5503	4030019560	S.CER GRM21BB31C106KE15L	T	58.4/24.6
C5504	4030022160	S.CER GRM033B31A104KE84D	T	56.7/26.8
C5505	4030019560	S.CER GRM21BB31C106KE15L	T	82.8/31.9
C5506	4030019560	S.CER GRM21BB31C106KE15L	T	89.5/25.9
C5507	4030025230	S.CER TMK107BJ105KAHT	T	89.5/27.8

Eqv.= This component is equivalent to the REF No. component listed above, and may be substituted on parts orders and repairs.

[MAIN UNIT]

REF NO.	PART NO.	DESCRIPTION	M.	H/V LOCATION
C5508	4030025230	S.CER TMK107BJ105KAHT	T	85.5/27.8
C5521	4030019560	S.CER GRM21BB31C106KE15L	T	55.7/42.3
C5522	4030026000	S.CER GRM033R71E332KA12D	T	55.5/29.7
C5523	4030022160	S.CER GRM033B31A104KE84D	T	57.6/32.9
C5524	4030025820	S.CER GRM033B31H821KA12D	T	56.2/32.9
C5525	4030025230	S.CER TMK107BJ105KAHT	T	52.6/31.0
C5526	4030025230	S.CER TMK107BJ105KAHT	T	52.6/32.3
C5541	4030019560	S.CER GRM21BB31C106KE15L	T	135.2/10.4
C5542	4030026000	S.CER GRM033R71E332KA12D	T	140.4/8.5
C5543	4030026000	S.CER GRM033R71E332KA12D	T	127.2/8.5
C5544	4030022160	S.CER GRM033B31A104KE84D	T	138.3/5.2
C5545	4030022160	S.CER GRM033B31A104KE84D	T	129.3/5.2
C5546	4030025820	S.CER GRM033B31H821KA12D	T	138.3/6.8
C5547	4030025820	S.CER GRM033B31H821KA12D	T	129.3/6.8
C5548	4030019560	S.CER GRM21BB31C106KE15L	T	138.4/11.3
C5549	4030019560	S.CER GRM21BB31C106KE15L	T	128.3/10.3
C5550	4030019560	S.CER GRM21BB31C106KE15L	T	93.9/26.7
C5552	4030019560	S.CER GRM21BB31C106KE15L	T	92.1/26.7
C5554	4030019560	S.CER GRM21BB31C106KE15L	T	108.1/4.1
C5561	4030019560	S.CER GRM21BB31C106KE15L	T	111.0/53.3
C5562	4030022160	S.CER GRM033B31A104KE84D	T	113.3/46.2
C5564	4030022150	S.CER GRM033B31E103KA12D	T	111.7/46.2
C5581	4030025370	S.CER GRM033R61C104KE14D	T	103.3/58.4
C5582	4030025370	S.CER GRM033R61C104KE14D	T	106.9/57.3
C5583	4030025320	S.CER GRM0332C1H151JA01D	T	103.8/63.1
C5584	4030025320	S.CER GRM0332C1H151JA01D	T	108.9/62.0
C5587	4030025370	S.CER GRM033R61C104KE14D	T	99.8/61.8
C5588	4030025370	S.CER GRM033R61C104KE14D	T	110.8/60.0
C5589	4030025370	S.CER GRM033R61C104KE14D	T	54.7/40.6
C5590	4030025370	S.CER GRM033R61C104KE14D	T	134.9/8.9
C5591	4030025370	S.CER GRM033R61C104KE14D	T	110.1/51.9
C5592	4030024900	S.CER GRM033R61A224KE90D	T	102.9/63.1
C5602	4030019560	S.CER GRM21BB31C106KE15L	T	12.9/23.6
C5603	4030019560	S.CER GRM21BB31C106KE15L	T	12.9/25.4
C5604	4030025230	S.CER TMK107BJ105KAHT	T	12.6/20.3
C5605	4030025230	S.CER TMK107BJ105KAHT	T	12.6/22.0
C5606	4030025230	S.CER TMK107BJ105KAHT	T	12.6/29.6
C5607	4510010920	ELE UKA1E102MPD		
C5608	4510010920	ELE UKA1E102MPD		
C5615	4510010920	ELE UKA1E102MPD		
C5616	4030022160	S.CER GRM033B31A104KE84D	T	15.8/19.0
C5621	4030022160	S.CER GRM033B31A104KE84D	T	74.4/37.7
C5622	4030019560	S.CER GRM21BB31C106KE15L	T	71.7/38.7
C5623	4030022160	S.CER GRM033B31A104KE84D	T	71.7/27.1
C5624	4030022160	S.CER GRM033B31A104KE84D	T	75.5/27.1
C5625	4030019560	S.CER GRM21BB31C106KE15L	T	71.6/25.7
C5626	4030019560	S.CER GRM21BB31C106KE15L	T	76.8/25.7
C5642	4030025230	S.CER TMK107BJ105KAHT	T	68.6/28.9
C5644	4030019560	S.CER GRM21BB31C106KE15L	T	181.6/15.4
C5646	4030019560	S.CER GRM21BB31C106KE15L	T	61.6/26.5
C5647	4030025230	S.CER TMK107BJ105KAHT	T	67.3/28.9
C5651	4030022160	S.CER GRM033B31A104KE84D	T	58.6/20.2
C5653	4030025230	S.CER TMK107BJ105KAHT	T	64.8/18.6
C5654	4030025230	S.CER TMK107BJ105KAHT	T	63.6/18.6
C5661	4030022160	S.CER GRM033B31A104KE84D	T	180.2/14.9
C5663	4030025230	S.CER TMK107BJ105KAHT	T	172.0/16.0
C5664	4030025230	S.CER TMK107BJ105KAHT	T	172.0/17.2
C5671	4030025230	S.CER TMK107BJ105KAHT	T	67.3/26.0
C5676	4030025230	S.CER TMK107BJ105KAHT	T	68.6/26.0
C5681	4030022160	S.CER GRM033B31A104KE84D	T	58.3/13.5
C5683	4030025230	S.CER TMK107BJ105KAHT	T	63.2/10.2
C5684	4030025230	S.CER TMK107BJ105KAHT	T	64.4/10.2
C5910	4030022080	S.CER GRM0332C1H101JA01D	T	206.6/84.7
C5911	4030025370	S.CER GRM033R61C104KE14D	T	210.6/85.2
C5912	4030025370	S.CER GRM033R61C104KE14D	T	202.2/83.2
C5913	4030025230	S.CER TMK107BJ105KAHT	T	200.4/88.1
C5914	4030025370	S.CER GRM033R61C104KE14D	T	200.9/86.9
C5915	4030025370	S.CER GRM033R61C104KE14D	T	208.3/89.1
C5916	4030025230	S.CER TMK107BJ105KAHT	T	208.7/90.3
C5921	4030022140	S.CER GRM033B31H102KA12D	T	194.0/84.2
C5922	4030025370	S.CER GRM033R61C104KE14D	T	192.2/89.0
C5923	4030025370	S.CER GRM033R61C104KE14D	T	192.2/90.5
C5942	4030024420	S.CER GRM0332C1H180JA01D	T	202.0/95.2
C5943	4030022080	S.CER GRM0332C1H101JA01D	T	202.8/96.5
C5944	4030024900	S.CER GRM033R61A224KE90D	T	202.8/98.3
C5945	4030025370	S.CER GRM033R61C104KE14D	T	200.8/92.5
C5952	4030024900	S.CER GRM033R61A224KE90D	T	208.1/91.4
C5953	4030022150	S.CER GRM033B31E103KA12D	T	205.6/96.5
C5954	4030025230	S.CER TMK107BJ105KAHT	T	211.4/98.7
C5955	4030025230	S.CER TMK107BJ105KAHT	T	214.2/98.7
C5956	4030025230	S.CER TMK107BJ105KAHT	T	211.4/94.8
C5957	4030025230	S.CER TMK107BJ105KAHT	T	211.4/93.5
C5958	4030025230	S.CER TMK107BJ105KAHT	T	211.4/97.4
C5959	4030025230	S.CER TMK107BJ105KAHT	T	211.4/96.1
C5962	4030025700	S.CER GRM033R71E472KE14D	T	190.7/95.1
C5963	4030025890	S.CER GRM033B31C473KE84D	T	192.1/95.1
RL4701	6330001750	REL FTR-B4CA012Z		
J4001	6510022611	S.CON 16FMN-BMTTR-A-TBT (LF) (SN)	T	101.0/115.2
J4051	6510022601	S.CON 30FMN-BMTTR-A-TBT (LF) (SN)	T	87.5/20.3
J4071	6510022601	S.CON 30FMN-BMTTR-A-TBT (LF) (SN)	T	153.5/115.2
J4141	6510023671	CON TCS4480-0141577		
J4161	6450002470	CON JY-3510A		
J4181	6510022031	S.CON B10B-ZR-SM4-TF (LF) (SN)	T	39.0/29.9
J4201	6510022601	S.CON 30FMN-BMTTR-A-TBT (LF) (SN)	T	87.5/11.0
J4401	6510028210	CON SJ050010 (TMP-J01X-V6)		
J4421	6510028210	CON SJ050010 (TMP-J01X-V6)		
J4701	6510028210	CON SJ050010 (TMP-J01X-V6)		
J4941	6510027570	S.CON B7B-ZR-SM4-TF (LF) (SN)	T	204.8/63.9
J4951	6510027111	S.CON 08FLT-SM2-TB (LF) (SN) (M)	T	194.1/65.0
J5071	6510026540	CON UBB-4R-D14T-4D (LF) (SN)		
J5081	6510021861	CON BH-800.4GG		

M.= Mounted side (T: Mounted on the Top side, B: Mounted on the Bottom side)
H/V LOCATION=See the BOARD LAYOUTS for details.

[MAIN UNIT]

REF NO.	PART NO.	DESCRIPTION		M.	H/V LOCATION
J5101	6510019971	S.CON	52808-1071	T	199.0/113.4
J5102	6510023980	S.CON	20R-JMCS-G-B-TF (NSA)	T	215.6/65.3
BT5081	3020000110	LIT	CR-2032L/BK		
EP4001	6910019900	S.BEA	MPZ1608S601AT	T	133.7/104.6
EP4002	6910019900	S.BEA	MPZ1608S601AT	T	125.3/104.6
EP4051	6910019100	S.BEA	MPZ1608S101AT	T	71.5/17.2
EP4052	6910019100	S.BEA	MPZ1608S101AT	T	88.3/23.9
EP4053	6910019900	S.BEA	MPZ1608S601AT	T	88.2/16.4
EP4071	6910012350	S.BEA	MMZ1608Y 102BT	T	139.9/110.4
EP4072	6910012350	S.BEA	MMZ1608Y 102BT	T	150.7/110.4
EP4073	6910023820	S.BEA	MPZ2012S101A-T	T	159.4/110.1
EP4074	6910023820	S.BEA	MPZ2012S101A-T	T	174.8/111.7
EP4141	6910023820	S.BEA	MPZ2012S101A-T	T	152.5/22.5
EP4142	6910023820	S.BEA	MPZ2012S101A-T	T	157.7/21.6
EP4181	6910018930	S.BEA	MPZ2012S601A	T	47.8/23.3
EP4182	6910018930	S.BEA	MPZ2012S601A	T	44.3/23.3
EP4183	6910018930	S.BEA	MPZ2012S601A	T	40.8/23.3
EP4184	6910018930	S.BEA	MPZ2012S601A	T	37.3/23.3
EP4185	6910014730	S.BEA	MPZ2012S331A-T	T	18.5/19.0
EP4188	6910014730	S.BEA	MPZ2012S331A-T	T	18.5/25.4
EP4190	6910016330	S.BEA	MMZ1005S 601CT-S	T	45.0/26.4
EP4191	6910016330	S.BEA	MMZ1005S 601CT-S	T	46.1/26.4
EP4192	6910014730	S.BEA	MPZ2012S331A-T	T	18.5/23.6
EP4201	6910023820	S.BEA	MPZ2012S101A-T	T	71.7/14.9
EP4202	6910023820	S.BEA	MPZ2012S101A-T	T	77.3/14.9
EP4203	6910023820	S.BEA	MPZ2012S101A-T	T	80.9/14.9
EP4204	6910019900	S.BEA	MPZ1608S601AT	T	84.4/15.4
EP4205	6910019900	S.BEA	MPZ1608S601AT	T	93.3/15.4
EP4206	6910019900	S.BEA	MPZ1608S601AT	T	91.1/15.4
EP4208	6910023820	S.BEA	MPZ2012S101A-T	T	87.6/14.9
EP4232	6910018930	S.BEA	MPZ2012S601A	T	184.2/88.5
EP4233	6910018930	S.BEA	MPZ2012S601A	T	186.3/68.5
EP4261	6910024810	S.BEA	MPZ2012S300AT	T	171.1/77.7
EP4381	6910018930	S.BEA	MPZ2012S601A	T	122.8/14.1
EP4382	6910018930	S.BEA	MPZ2012S601A	T	122.8/5.5
EP4661	6910012350	S.BEA	MMZ1608Y 102BT	T	63.1/52.3
EP4662	6910012350	S.BEA	MMZ1608Y 102BT	T	82.4/52.2
EP4663	6910012350	S.BEA	MMZ1608Y 102BT	T	82.4/53.5
EP4664	6910012350	S.BEA	MMZ1608Y 102BT	T	80.8/46.1
EP4665	6910012350	S.BEA	MMZ1608Y 102BT	T	85.2/46.1
EP4901	6910012350	S.BEA	MMZ1608Y 102BT	T	192.8/31.6
EP4941	6910012350	S.BEA	MMZ1608Y 102BT	T	208.0/69.2
EP4942	6910012350	S.BEA	MMZ1608Y 102BT	T	199.0/60.6
EP5071	6910023350	S.BEA	MMZ1005B601CT	T	204.7/13.8
EP5101	6910019900	S.BEA	MPZ1608S601AT	T	201.1/103.0
EP5102	6910023350	S.BEA	MMZ1005B601CT	T	208.1/57.1
EP5131	6910019900	S.BEA	MPZ1608S601AT	T	164.5/73.6
EP5155	6910019900	S.BEA	MPZ1608S601AT	T	127.6/78.8
EP5161	6910018460	S.BEA	MMZ1005Y102C-T	T	94.6/69.6
EP5162	6910018460	S.BEA	MMZ1005Y102C-T	T	85.3/76.3
EP5182	6910018460	S.BEA	MMZ1005Y102C-T	T	104.5/75.3
EP5201	6910018460	S.BEA	MMZ1005Y102C-T	T	120.7/91.3
EP5202	6910018460	S.BEA	MMZ1005Y102C-T	T	127.7/91.3
EP5221	6910018460	S.BEA	MMZ1005Y102C-T	T	92.1/92.6
EP5222	6910018460	S.BEA	MMZ1005Y102C-T	T	90.6/104.1
EP5242	6910018460	S.BEA	MMZ1005Y102C-T	T	104.5/86.7
EP5281	6910018460	S.BEA	MMZ1005Y102C-T	T	120.3/62.3
EP5282	6910018460	S.BEA	MMZ1005Y102C-T	T	123.3/62.3
EP5301	6910019900	S.BEA	MPZ1608S601AT	T	140.6/92.4
EP5321	6910024810	S.BEA	MPZ2012S300AT	T	159.7/81.1
EP5341	6910019900	S.BEA	MPZ1608S601AT	T	165.8/72.2
EP5351	6910019900	S.BEA	MPZ1608S601AT	T	165.8/75.0
EP5352	6910019900	S.BEA	MPZ1608S601AT	T	165.8/67.4
EP5361	6910019900	S.BEA	MPZ1608S601AT	T	163.8/83.8
EP5371	6910019900	S.BEA	MPZ1608S601AT	T	163.8/86.7
EP5381	6910019900	S.BEA	MPZ1608S601AT	T	134.3/94.0
EP5391	6910019900	S.BEA	MPZ1608S601AT	T	165.8/66.0
EP5401	6910018460	S.BEA	MMZ1005Y102C-T	T	148.5/52.2
EP5421	6910023420	S.BEA	MMZ1005A222ET	T	119.4/39.7
EP5422	6910018460	S.BEA	MMZ1005Y102C-T	T	116.3/48.2
EP5441	6910018460	S.BEA	MMZ1005Y102C-T	T	121.0/54.7
EP5451	6910018460	S.BEA	MMZ1005Y102C-T	T	120.1/60.0
EP5461	6910018460	S.BEA	MMZ1005Y102C-T	T	122.9/60.6
EP5481	6910023420	S.BEA	MMZ1005A222ET	T	121.7/40.9
EP5482	6910018460	S.BEA	MMZ1005Y102C-T	T	122.2/48.2
EP5491	6910018460	S.BEA	MMZ1005Y102C-T	T	127.1/54.7
EP5501	6910019900	S.BEA	MPZ1608S601AT	T	83.1/40.2
EP5502	6910019900	S.BEA	MPZ1608S601AT	T	82.8/28.8
EP5621	6910019900	S.BEA	MPZ1608S601AT	T	74.8/38.9
EP5622	6910019900	S.BEA	MPZ1608S601AT	T	74.0/26.3

Eqv.= This component is equivalent to the REF No. component listed above, and may be substituted on parts orders and repairs.

M.= Mounted side (T: Mounted on the Top side, B: Mounted on the Bottom side)
H/V LOCATION=See the BOARD LAYOUTS for details.

[CONNECT UNIT]

REF NO.	PART NO.	DESCRIPTION		M.	H/V LOCATION
IC7701	1190004602	S.IC	GSU-141A-090E	T	93.8/8.5
IC7702	1180004740	S.REG	S-1313D33-M5T1U3	T	98.3/23.2
IC7703	1180004740	S.REG	S-1313D33-M5T1U3	T	100.1/16.8
IC7721	1120002921	S.IC	ADM202EARNZ-REEL7	T	25.8/23.7
IC7722	1120003060	S.IC	ADM4853ARZ-REEL7	T	25.8/15.8
IC7723	1130018100	S.IC	TC7WH32FU (TE12LF)	T	15.8/19.1
IC7731	1170000500	S.PHO	TLP2303	T	39.6/19.5
IC7741	1130007031	S.IC	TC7W08FU (TE12LF)	T	15.8/25.2
IC7751	1170000500	S.PHO	TLP2303	T	4.9/20.8
IC7791	1130007111	S.IC	TC7W04FU (TE12LF)	T	8.6/26.3
Q7721	1530004140	S.TRA	L2SC4081RT1G	T	52.0/15.0
Q7722	1530004140	S.TRA	L2SC4081RT1G	T	61.9/21.1
Q7723	1590004690	S.TRA	LDTC143ZET1G	T	57.7/26.7
Q7724	1590004690	S.TRA	LDTC143ZET1G	T	53.2/25.9
Q7731	1530003091	S.TRA	2SC4213-B (TE85RF)	T	52.0/20.7
Q7751	1530003091	S.TRA	2SC4213-B (TE85RF)	T	6.2/15.2
Q7791	1590004690	S.TRA	LDTC143ZET1G	T	10.3/30.3
Q7792	1590004690	S.TRA	LDTC143ZET1G	T	8.3/30.3
D7711	1750001810	S.DIO	L1SS400T1G	T	72.1/13.5
D7721	1790001990	S.VAR	EZJP0V080DA	T	54.0/12.7
D7722	1790001990	S.VAR	EZJP0V080DA	T	49.5/12.9
D7723	1750001810	S.DIO	L1SS400T1G	T	46.5/24.3
D7724	1750001810	S.DIO	L1SS400T1G	T	58.1/24.3
D7731	1750001180	S.DIO	KDS122 RTK/P	T	52.0/18.2
D7746	1750001810	S.DIO	L1SS400T1G	T	49.1/17.5
D7747	1750001810	S.DIO	L1SS400T1G	T	61.3/16.4
D7751	1750001180	S.DIO	KDS122 RTK/P	T	8.7/15.2
FI7701	2040002420	S.SAW	TA0757B	T	94.7/15.5
L7701	6200011280	S.COI	C1608CB-R10G-A	T	92.1/17.5
L7702	6200017650	S.COI	NLV25T-4R7J-EF	T	95.4/18.6
L7721	6200017540	S.COI	NLV25T-101J-EF	T	32.3/20.0
L7722	6200017530	S.COI	NLV25T-100J-EF	T	32.3/17.5
R7701	7030016640	S.RES	RMC1/16S-1R0JTH (1)	T	92.8/15.5
R7702	7030016640	S.RES	RMC1/16S-1R0JTH (1)	T	96.3/15.3
R7703	7030016640	S.RES	RMC1/16S-1R0JTH (1)	T	100.8/21.7
R7704	7030016020	S.RES	RMC1/16S-104JTH (100 k)	T	99.4/5.2
R7705	7030016020	S.RES	RMC1/16S-104JTH (100 k)	T	99.4/6.9
R7711	7030016560	S.RES	RMC1/16SJPTH	T	65.4/16.3
R7712	7030016560	S.RES	RMC1/16SJPTH	T	76.4/24.8
R7713	7030016560	S.RES	RMC1/16SJPTH	T	78.3/16.2
R7714	7030016560	S.RES	RMC1/16SJPTH	T	89.3/24.3
R7721	7030016110	S.RES	RMC1/16S-473JTH (47 k)	T	49.6/15.7
R7722	7030016110	S.RES	RMC1/16S-473JTH (47 k)	T	54.0/15.3
R7723	7030015970	S.RES	RMC1/16S-103JTH (10 k)	T	61.3/18.6
R7724	7030016110	S.RES	RMC1/16S-473JTH (47 k)	T	61.9/23.5
R7725	7030016560	S.RES	RMC1/16SJPTH	T	37.1/13.7
R7726	7030016560	S.RES	RMC1/16SJPTH	T	38.0/13.7
R7727	7030016560	S.RES	RMC1/16SJPTH	T	40.8/13.7
R7728	7030016560	S.RES	RMC1/16SJPTH	T	38.9/13.7
R7729	7540000380	S.ABS	EZAEG2A50AX	T	31.3/26.9
R7730	7540000380	S.ABS	EZAEG2A50AX	T	31.3/28.2
R7731	7030016110	S.RES	RMC1/16S-473JTH (47 k)	T	21.2/25.6
R7732	7030016110	S.RES	RMC1/16S-473JTH (47 k)	T	21.2/23.1
R7733	7030016110	S.RES	RMC1/16S-473JTH (47 k)	T	30.1/15.6
R7734	7030016110	S.RES	RMC1/16S-473JTH (47 k)	T	14.5/22.0
R7736	7030016370	S.RES	RMC1/16S-271JTH (270)	T	49.1/19.8
R7737	7030016430	S.RES	RMC1/16S-392JTH (3.9 k)	T	54.0/19.5
R7738	7030016640	S.RES	RMC1/16S-1R0JTH (1)	T	38.4/25.0
R7739	7030016370	S.RES	RMC1/16S-271JTH (270)	T	55.9/24.3
R7740	7030016370	S.RES	RMC1/16S-271JTH (270)	T	44.4/24.3
R7741	7030015960	S.RES	RMC1/16S-472JTH (4.7 k)	T	17.2/22.0
R7742	7030015960	S.RES	RMC1/16S-472JTH (4.7 k)	T	12.6/25.9
R7744	7030016110	S.RES	RMC1/16S-473JTH (47 k)	T	14.5/23.0
R7746	7030016060	S.RES	RMC1/16S-105JTH (1 M)	T	49.1/14.3
R7747	7030016060	S.RES	RMC1/16S-105JTH (1 M)	T	62.4/16.7
R7748	7030016020	S.RES	RMC1/16S-104JTH (100 k)	T	37.1/16.2
R7749	7030016410	S.RES	RMC1/16S-561JTH (560)	T	39.2/26.3
R7751	7030016370	S.RES	RMC1/16S-271JTH (270)	T	10.5/14.6
R7752	7030016430	S.RES	RMC1/16S-392JTH (3.9 k)	T	4.1/14.2
R7753	7030016020	S.RES	RMC1/16S-104JTH (100 k)	T	4.1/15.2
R7754	7030016410	S.RES	RMC1/16S-561JTH (560)	T	4.9/27.1
R7755	7030016640	S.RES	RMC1/16S-1R0JTH (1)	T	3.9/27.1
R7761	7030015920	S.RES	RMC1/16S-221JTH (220)	T	41.7/28.7
R7762	7030015920	S.RES	RMC1/16S-221JTH (220)	T	42.7/28.7
R7763	7030015920	S.RES	RMC1/16S-221JTH (220)	T	43.7/28.7
R7764	7030015920	S.RES	RMC1/16S-221JTH (220)	T	44.7/28.7
R7765	7030015920	S.RES	RMC1/16S-221JTH (220)	T	45.7/28.7
R7766	7030015970	S.RES	RMC1/16S-103JTH (10 k)	T	54.9/25.6
R7791	7030015960	S.RES	RMC1/16S-472JTH (4.7 k)	T	11.2/27.2
R7792	7030015960	S.RES	RMC1/16S-472JTH (4.7 k)	T	11.2/26.3
C7701	4030025040	S.CER	GRM0332C1H220JA01D	T	92.6/19.0
C7702	4030025300	S.CER	GRM0332C1H221JA01D	T	93.6/19.0
C7703	4030026070	S.CER	GRM0332C1E471JA01D	T	97.5/21.0
C7704	4030025420	S.CER	GRM033R61A105ME15D	T	97.5/20.0
C7705	4030026070	S.CER	GRM0332C1E471JA01D	T	99.2/21.0
C7706	4030025420	S.CER	GRM033R61A105ME15D	T	99.2/20.0
C7707	4030025370	S.CER	GRM033R61C104KE14D	T	99.4/11.0
C7708	4030025370	S.CER	GRM033R61C104KE14D	T	99.4/13.0
C7709	4030022140	S.CER	GRM033B31H102KA12D	T	99.4/12.0
C7710	4030019560	S.CER	GRM21BB31C106KE15L	T	100.0/9.6
C7711	4030025370	S.CER	GRM033R61C104KE14D	T	70.4/13.3
C7712	4030025370	S.CER	GRM033R61C104KE14D	T	77.2/13.3
C7713	4030025370	S.CER	GRM033R61C104KE14D	T	75.1/13.3

Eqv.= This component is equivalent to the REF No. component listed above, and may be substituted on parts orders and repairs.

[CONNECT UNIT]

REF NO.	PART NO.	DESCRIPTION		M.	H/V LOCATION
C7714	4030025370	S.CER	GRM033R61C104KE14D	T	69.0/13.3
C7715	4030025370	S.CER	GRM033R61C104KE14D	T	66.2/13.3
C7716	4030025420	S.CER	GRM033R61A105ME15D	T	100.8/19.2
C7717	4030025420	S.CER	GRM033R61A105ME15D	T	100.8/14.5
C7720	4030022120	S.CER	GRM0332C1H470JA01D	T	91.3/15.8
C7721	4030025700	S.CER	GRM033R71E472KE14D	T	50.0/14.4
C7722	4030022150	S.CER	GRM033B31E103KA12D	T	62.4/18.8
C7723	4030025420	S.CER	GRM033R61A105ME15D	T	30.1/21.5
C7724	4030025420	S.CER	GRM033R61A105ME15D	T	30.1/23.8
C7725	4030025420	S.CER	GRM033R61A105ME15D	T	31.2/25.6
C7726	4030025420	S.CER	GRM033R61A105ME15D	T	30.1/19.7
C7727	4030025420	S.CER	GRM033R61A105ME15D	T	21.0/19.3
C7728	4030022150	S.CER	GRM033B31E103KA12D	T	21.5/14.8
C7729	4030022150	S.CER	GRM033B31E103KA12D	T	46.5/25.3
C7730	4030025370	S.CER	GRM033R61C104KE14D	T	17.0/21.2
C7731	4030022140	S.CER	GRM033B31H102KA12D	T	54.0/17.9
C7732	4030025370	S.CER	GRM033R61C104KE14D	T	37.5/24.2
C7733	4030025370	S.CER	GRM033R61C104KE14D	T	45.0/25.3
C7734	4030022150	S.CER	GRM033B31E103KA12D	T	58.1/25.3
C7735	4030025370	S.CER	GRM033R61C104KE14D	T	56.1/25.3
C7741	4030025370	S.CER	GRM033R61C104KE14D	T	12.5/24.2
C7753	4030025370	S.CER	GRM033R61C104KE14D	T	3.6/25.7
C7761	4030025370	S.CER	GRM033R61C104KE14D	T	17.0/29.1
C7762	4030025370	S.CER	GRM033R61C104KE14D	T	33.4/27.2
C7763	4030025370	S.CER	GRM033R61C104KE14D	T	37.5/27.6
C7791	4030025370	S.CER	GRM033R61C104KE14D	T	8.8/23.0
C7891	4030025370	S.CER	GRM033R61C104KE14D	T	43.1/24.6
RL7721	6330002110	REL	UA2-9NU		
RL7722	6330002110	REL	UA2-9NU		
J7701	2610000510	S.CON	U.FL-R-SMT (10)	T	93.3/23.0
J7711	6510023120	CON	CD6109SA1J0		
J7721	6510023120	CON	CD6109SA1J0		
J7751	6450002650	CON	BNC-6252H7		
J7761	6510022601	S.CON	30FMN-BMTTR-A-TBT (LF) (SN)	T	33.2/32.6
EP7701	6910023820	S.BEA	MPZ2012S101A-T	T	101.1/12.3
EP7761	6910023820	S.BEA	MPZ2012S101A-T	T	16.1/31.7
EP7762	6910023820	S.BEA	MPZ2012S101A-T	T	34.7/27.9
EP7763	6910019900	S.BEA	MPZ1608S601AT	T	36.3/28.2
EP7891	6910018930	S.BEA	MPZ2012S601A	T	51.8/23.8

M.= Mounted side (T: Mounted on the Top side, B: Mounted on the Bottom side)
H/V LOCATION=See the BOARD LAYOUTS for details.

[PA UNIT]

REF NO.	PART NO.	DESCRIPTION		M.	H/V LOCATION
IC6101	1110008550	S.IC	NJM2904CRB1-TE1-#HMZR	T	164.5/16.9
IC6201	1110008550	S.IC	NJM2904CRB1-TE1-#HMZR	T	153.5/16.9
IC6401	1110008550	S.IC	NJM2904CRB1-TE1-#HMZR	T	114.1/26.2
IC6402	1110008550	S.IC	NJM2904CRB1-TE1-#HMZR	T	114.5/34.8
IC6502	1110007950	S.IC	INA199A2DCKR	T	24.1/29.0
IC6503	1110007950	S.IC	INA199A2DCKR	T	120.2/87.3
Q6101	1560002630	FET	RD06HVF1-501		
Q6201	1560002640	FET	RD15HVF1-501		
Q6202	1560002640	FET	RD15HVF1-501		
Q6301	1560002670	FET	RD100HHF1C-503-N4		
Q6302	1560002670	FET	RD100HHF1C-503-N4		
Q6303	1560002670	FET	RD100HHF1C-503-N4		
Q6304	1560002670	FET	RD100HHF1C-503-N4		
Q6501	1540000830	S.TRA	2SD1664G-Q-AB3-R	T	124.5/18.6
Q6701	1590004690	S.TRA	LDTC143ZET1G	T	186.4/55.4
Q6702	1590005140	S.FET	TJ50S06M3L	T	180.1/59.3
D6201	1750002230	S.DIO	LRB751S-40T1G	T	147.6/31.4
D6202	1750002230	S.DIO	LRB751S-40T1G	T	149.3/67.5
D6301	1750002230	S.DIO	LRB751S-40T1G	T	99.2/19.2
D6302	1750002230	S.DIO	LRB751S-40T1G	T	99.2/80.9
D6303	1750002230	S.DIO	LRB751S-40T1G	T	95.5/85.1
D6304	1750002230	S.DIO	LRB751S-40T1G	T	95.5/14.9
D6305	1750001810	S.DIO	L1SS400T1G	T	99.2/31.3
D6306	1750001810	S.DIO	L1SS400T1G	T	99.2/68.8
D6307	1750001810	S.DIO	L1SS400T1G	T	83.2/13.0
D6308	1750001810	S.DIO	L1SS400T1G	T	83.2/87.1
D6601	1710001161	S.DIO	DF40SC4-7072	T	8.9/80.5
D6602	1750004200	S.ZEN	UDZVTE-17 20B	T	15.7/68.0
L6101	6140003240	COI	LR-361		
L6102	6140003230	S.COI	LR-360	T	173.0/50.3
L6201	6140005760	COI	LR-530-1		
L6301	6140005300	COI	LR-580 (TRB10×5×5 6DB)		
L6302	6140005620	COI	LR-609		
L6406	6140005780	COI	LR-507-1 (SMC)		
L6408	6110001730	COI	LA-262		
L6501	6200017690	S.COI	NLV32T-101J-EF	T	101.1/7.9
L6702	6200017540	S.COI	NLV25T-101J-EF	T	103.4/15.5
L6703	6200017540	S.COI	NLV25T-101J-EF	T	177.1/79.9
L6704	6200017540	S.COI	NLV25T-101J-EF	T	174.6/79.9
L6707	6200017540	S.COI	NLV25T-101J-EF	T	118.0/18.8
R6101	7030014960	S.RES	RMC1/16-390JTP (39)	T	175.8/43.3
R6102	7030015030	S.RES	RMC1/16-151JTP (150)	T	176.5/41.2
R6103	7030015030	S.RES	RMC1/16-151JTP (150)	T	176.5/45.5
R6104	7030015050	S.RES	RMC1/16-221JTP (220)	T	167.9/50.4
R6105	7030015050	S.RES	RMC1/16-221JTP (220)	T	162.4/52.3
R6106	7030015170	S.RES	RMC1/16-222JTP (2.2 k)	T	161.6/50.1
R6108	7030015100	S.RES	RMC1/16-561JTP (560)	T	158.8/50.4
R6110	7030015790	S.RES	RMC1/10-471JTP (470)	T	156.8/50.8
R6111	7030015010	S.RES	RMC1/16-101JTP (100)	T	161.5/13.7
R6112	7030015190	S.RES	RMC1/16-332JTP (3.3 k)	T	164.3/13.7
R6113	7030015250	S.RES	RMC1/16-103JTP (10 k)	T	166.9/13.7
R6114	7030015250	S.RES	RMC1/16-103JTP (10 k)	T	162.1/15.8
R6119	7030015010	S.RES	RMC1/16-101JTP (100)	T	160.9/18.6
R6201	7030015720	S.RES	RMC1/10-470JTP (47)	T	146.1/35.1
R6204	7030015720	S.RES	RMC1/10-470JTP (47)	T	146.1/66.2
R6207	7030021750	S.RES	RMC1-820JTE	T	137.5/43.9
R6208	7030021750	S.RES	RMC1-820JTE	T	137.5/72.5
R6209	7030015170	S.RES	RMC1/16-222JTP (2.2 k)	T	144.7/39.8
R6210	7030015170	S.RES	RMC1/16-222JTP (2.2 k)	T	145.0/68.3
R6211	7030015010	S.RES	RMC1/16-101JTP (100)	T	149.9/13.8
R6212	7030015210	S.RES	RMC1/16-472JTP (4.7 k)	T	152.5/13.7
R6213	7030015250	S.RES	RMC1/16-103JTP (10 k)	T	155.1/13.7
R6214	7030015250	S.RES	RMC1/16-103JTP (10 k)	T	151.2/15.8
R6215	7030015010	S.RES	RMC1/16-101JTP (100)	T	150.7/20.3
R6216	7030015210	S.RES	RMC1/16-472JTP (4.7 k)	T	153.3/20.3
R6217	7030015250	S.RES	RMC1/16-103JTP (10 k)	T	156.0/20.3
R6218	7030015250	S.RES	RMC1/16-103JTP (10 k)	T	155.9/18.1
R6219	7030015010	S.RES	RMC1/16-101JTP (100)	T	150.0/18.4
R6220	7030021130	S.RES	RMC1-100JTE (10)	T	116.8/61.7
R6301	7030021160	S.RES	RMC1-101JTE (100)	T	102.5/50.0
R6304	7030015200	S.RES	RMC1/16-392JTP (3.9 k)	T	99.2/28.9
R6305	7030015200	S.RES	RMC1/16-392JTP (3.9 k)	T	99.2/71.2
R6310	7030021150	S.RES	RMC1-470JTE (47)	T	98.7/24.0
R6311	7030021180	S.RES	RMC1-2R2JTE (2.2)	T	95.0/29.8
R6312	7030021150	S.RES	RMC1-470JTE (47)	T	98.7/76.1
R6313	7030021180	S.RES	RMC1-2R2JTE (2.2)	T	95.0/70.3
R6316	7030015200	S.RES	RMC1/16-392JTP (3.9 k)	T	85.4/14.9
R6317	7030015200	S.RES	RMC1/16-392JTP (3.9 k)	T	85.4/85.1
R6318	7030021150	S.RES	RMC1-470JTE (47)	T	90.7/15.4
R6319	7030021180	S.RES	RMC1-2R2JTE (2.2)	T	84.9/19.1
R6320	7030021180	S.RES	RMC1-2R2JTE (2.2)	T	84.9/81.0
R6321	7030021150	S.RES	RMC1-470JTE (47)	T	90.7/84.7
R6322	7030021140	S.RES	RMC1-220JTE (22)	T	93.7/45.3
R6323	7030021140	S.RES	RMC1-220JTE (22)	T	97.6/45.3
R6324	7030021140	S.RES	RMC1-220JTE (22)	T	93.7/54.7
R6325	7030021140	S.RES	RMC1-220JTE (22)	T	97.6/54.7
R6326	7030021190	S.RES	RMC1-6R8JTE (6.8)	T	87.8/50.0
R6327	7100000920	RES	MUN 7Z 50 J		
R6401	7030015010	S.RES	RMC1/16-101JTP (100)	T	111.1/23.0
R6402	7030015210	S.RES	RMC1/16-472JTP (4.7 k)	T	113.7/23.0
R6403	7030015270	S.RES	RMC1/16-153JTP (15 k)	T	116.3/23.0
R6404	7030015270	S.RES	RMC1/16-153JTP (15 k)	T	111.7/24.9
R6405	7030015010	S.RES	RMC1/16-101JTP (100)	T	111.5/29.4
R6406	7030015210	S.RES	RMC1/16-472JTP (4.7 k)	T	114.1/29.4
R6407	7030015270	S.RES	RMC1/16-153JTP (15 k)	T	116.7/29.4
R6408	7030015270	S.RES	RMC1/16-153JTP (15 k)	T	116.4/27.2
R6411	7030015010	S.RES	RMC1/16-101JTP (100)	T	108.1/36.8

Eqv.= This component is equivalent to the REF No. component listed above, and may be substituted on parts orders and repairs.

[PA UNIT]

REF NO.	PART NO.	DESCRIPTION		M.	H/V LOCATION
R6412	7030015210	S.RES	RMC1/16-472JTP (4.7 k)	T	111.3/36.1
R6413	7030015270	S.RES	RMC1/16-153JTP (15 k)	T	108.9/34.6
R6414	7030015270	S.RES	RMC1/16-153JTP (15 k)	T	111.3/33.5
R6415	7030015010	S.RES	RMC1/16-101JTP (100)	T	118.9/37.3
R6416	7030015210	S.RES	RMC1/16-472JTP (4.7 k)	T	117.7/34.7
R6417	7030015270	S.RES	RMC1/16-153JTP (15 k)	T	118.9/32.1
R6418	7030015270	S.RES	RMC1/16-153JTP (15 k)	T	113.8/32.4
R6419	7030015010	S.RES	RMC1/16-101JTP (100)	T	110.4/27.5
R6420	7030015010	S.RES	RMC1/16-101JTP (100)	T	117.0/37.1
R6421	7030021190	S.RES	RMC1-6R8JTE (6.8)	T	8.0/36.7
R6422	7030021190	S.RES	RMC1-6R8JTE (6.8)	T	8.0/33.0
R6423	7030021190	S.RES	RMC1-6R8JTE (6.8)	T	8.0/29.3
R6424	7510001661	S.THR	NTCG16 4LH 473JT	T	113.7/21.8
R6425	7510001661	S.THR	NTCG16 4LH 473JT	T	114.1/30.6
R6426	7510001661	S.THR	NTCG16 4LH 473JT	T	110.1/36.1
R6427	7510001661	S.THR	NTCG16 4LH 473JT	T	118.9/34.7
R6502	7030015290	S.RES	RMC1/16-223JTP (22 k)	T	29.5/29.3
R6503	7030015010	S.RES	RMC1/16-101JTP (100)	T	26.3/29.1
R6504	7030015130	S.RES	RMC1/16-102JTP (1 k)	T	29.5/28.1
R6509	7030015010	S.RES	RMC1/16-101JTP (100)	T	23.9/31.0
R6510	7030015050	S.RES	RMC1/16-221JTP (220)	T	122.0/21.6
R6517	7030015250	S.RES	RMC1/16-103JTP (10 k)	T	166.8/18.1
R6518	7030022120	S.RES	TLR3APDTE 10L0 F75	T	116.3/88.3
R6519	7030015010	S.RES	RMC1/16-101JTP (100)	T	120.1/89.3
R6520	7030015130	S.RES	RMC1/16-102JTP (1 k)	T	119.3/84.7
R6521	7030015250	S.RES	RMC1/16-103JTP (10 k)	T	120.5/84.7
R6522	7030015290	S.RES	RMC1/16-223JTP (22 k)	T	123.7/84.7
R6523	7030015010	S.RES	RMC1/16-101JTP (100)	T	123.7/87.3
R6651	7030019570	S.RES	PMR100HZPFV1L00	T	20.1/29.4
R6701	7030021200	S.RES	RMC1/2-JPTE (JPW)	T	184.5/83.0
R6704	7030015130	S.RES	RMC1/16-102JTP (1 k)	T	84.1/9.5
R6705	7510001551	S.THE	NTCG16 4LH 333JT	T	81.2/9.9
R6706	7030015370	S.RES	RMC1/16-104JTP (100 k)	T	186.3/61.1
R6707	7030015290	S.RES	RMC1/16-223JTP (22 k)	T	186.3/57.1
R6762	7030015010	S.RES	RMC1/16-101JTP (100)	T	160.9/15.8
R6763	7030015010	S.RES	RMC1/16-101JTP (100)	T	150.0/15.8
R6764	7030015010	S.RES	RMC1/16-101JTP (100)	T	157.1/18.1
R6765	7030015010	S.RES	RMC1/16-101JTP (100)	T	109.9/24.3
R6766	7030015010	S.RES	RMC1/16-101JTP (100)	T	117.7/27.2
R6767	7030015010	S.RES	RMC1/16-101JTP (100)	T	110.1/33.5
R6768	7030015010	S.RES	RMC1/16-101JTP (100)	T	116.4/32.4
C6103	4030023820	S.CER	0603B104K250CT	T	166.1/50.4
C6104	4030023820	S.CER	0603B104K250CT	T	164.3/54.1
C6105	4030023820	S.CER	0603B104K250CT	T	159.5/52.3
C6107	4030023820	S.CER	0603B104K250CT	T	158.8/54.9
C6108	4030023820	S.CER	0603B104K250CT	T	156.8/54.9
C6119	4030023820	S.CER	0603B104K250CT	T	162.1/18.6
C6201	4030024300	S.CER	0805B104K500CT	T	146.1/37.3
C6202	4030024300	S.CER	0805B104K500CT	T	146.1/64.3
C6203	4030023820	S.CER	0603B104K250CT	T	147.6/32.9
C6204	4030023820	S.CER	0603B104K250CT	T	149.3/66.2
C6205	4030019630	S.CER	GRM31C2C1H104JA01L	T	142.5/40.2
C6206	4030019630	S.CER	GRM31C2C1H104JA01L	T	142.5/68.8
C6208	4030023820	S.CER	0603B104K250CT	T	118.2/81.0
C6209	4030020810	S.CER	GRM31A5C2J820JW01D	T	127.4/50.0
C6211	4030019630	S.CER	GRM31C2C1H104JA01L	T	115.7/67.0
C6212	4030020800	S.CER	GRM31A5C2J680JW01D	T	129.6/50.0
C6219	4030023820	S.CER	0603B104K250CT	T	151.2/18.4
C6221	4030025230	S.CER	TMK107BJ105KAHT	T	140.8/40.9
C6222	4030025230	S.CER	TMK107BJ105KAHT	T	140.8/69.4
C6301	4030023820	S.CER	0603B104K250CT	T	99.2/18.0
C6302	4030023820	S.CER	0603B104K250CT	T	99.2/82.1
C6303	4030019630	S.CER	GRM31C2C1H104JA01L	T	95.1/23.3
C6304	4030019630	S.CER	GRM31C2C1H104JA01L	T	95.1/76.8
C6305	4030023820	S.CER	0603B104K250CT	T	99.2/30.1
C6306	4030023820	S.CER	0603B104K250CT	T	99.2/70.0
C6307	4030023820	S.CER	0603B104K250CT	T	96.7/14.9
C6308	4030023820	S.CER	0603B104K250CT	T	96.7/85.1
C6309	4030019630	S.CER	GRM31C2C1H104JA01L	T	91.4/19.9
C6310	4030023820	S.CER	0603B104K250CT	T	83.3/14.2
C6311	4030023820	S.CER	0603B104K250CT	T	83.2/85.9
C6312	4030019630	S.CER	GRM31C2C1H104JA01L	T	91.4/80.2
C6313	4030019630	S.CER	GRM31C2C1H104JA01L	T	102.0/42.0
C6314	4030019630	S.CER	GRM31C2C1H104JA01L	T	102.0/58.0
C6316	4030021020	S.CER	GRM31A5C2J101JW01D	T	61.3/60.9
C6318	4030021020	S.CER	GRM31A5C2J101JW01D	T	61.3/39.2
C6319	4030021020	S.CER	GRM31A5C2J101JW01D	T	53.7/86.4
C6320	4030021020	S.CER	GRM31A5C2J101JW01D	T	53.7/13.7
C6321	4320001080	S.MIC	UC342H 4700J-T	T	51.6/50.0
C6322	4320001220	S.MIC	UC552H 1001J-T		
C6331	4030025230	S.CER	TMK107BJ105KAHT	T	93.4/23.3
C6332	4030025230	S.CER	TMK107BJ105KAHT	T	93.4/76.8
C6333	4030025230	S.CER	TMK107BJ105KAHT	T	91.4/18.2
C6334	4030025230	S.CER	TMK107BJ105KAHT	T	91.4/81.9
C6335	4030025230	S.CER	TMK107BJ105KAHT	T	102.0/40.3
C6336	4030025230	S.CER	TMK107BJ105KAHT	T	102.0/59.7
C6412	4510011380	ELE	16 ME 1000 WA		
C6413	4510011380	ELE	16 ME 1000 WA		
C6414	4030024340	S.CER	0805B472K500CT	T	12.7/11.7
C6415	4030019630	S.CER	GRM31C2C1H104JA01L	T	14.7/11.4
C6416	4510011390	ELE	16 ME 2200 WA		
C6419	4030023820	S.CER	0603B104K250CT	T	111.7/27.5
C6420	4030023820	S.CER	0603B104K250CT	T	114.4/37.1
C6501	4030023820	S.CER	0603B104K250CT	T	26.5/31.0
C6502	4030023820	S.CER	0603B104K250CT	T	27.5/29.1
C6506	4030023820	S.CER	0603B104K250CT	T	28.2/85.5
C6507	4510010570	S.ELE	16 CE 470 LX	T	33.0/89.5
C6511	4030023820	S.CER	0603B104K250CT	T	33.4/26.3
C6513	4030023820	S.CER	0603B104K250CT	T	123.2/89.2
C6514	4030023820	S.CER	0603B104K250CT	T	121.7/84.7
C6521	4030023820	S.CER	0603B104K250CT	T	122.5/87.3
C6608	4030024350	S.CER	0805B473K500CT	T	26.1/32.6
C6609	4510011390	ELE	16 ME 2200 WA		

M.= Mounted side (T: Mounted on the Top side, B: Mounted on the Bottom side)
H/V LOCATION=See the BOARD LAYOUTS for details.

[PA UNIT]

REF NO.	PART NO.	DESCRIPTION		M.	H/V LOCATION
C6610	4030024300	S.CER	0805B104K500CT	T	15.7/69.8
C6611	4030024340	S.CER	0805B472K500CT	T	15.7/71.7
C6612	4030024280	S.CER	0805B102K500CT	T	15.7/73.5
C6613	4510011390	ELE	16 ME 2200 WA		
C6701	4030023820	S.CER	0603B104K250CT	T	186.3/62.4
C6702	4030023820	S.CER	0603B104K250CT	T	186.3/66.2
C6703	4030023820	S.CER	0603B104K250CT	T	84.1/10.7
C6704	4030024040	S.CER	0603B472K500CT	T	104.5/18.3
C6705	4030024040	S.CER	0603B472K500CT	T	138.6/10.6
C6706	4030024040	S.CER	0603B472K500CT	T	173.8/66.5
C6707	4030024040	S.CER	0603B472K500CT	T	174.6/84.0
C6708	4030024040	S.CER	0603B472K500CT	T	177.1/84.0
C6709	4030024040	S.CER	0603B472K500CT	T	119.9/17.8
C6711	4030023820	S.CER	0603B104K250CT	T	121.3/17.8
C6712	4030025230	S.CER	TMK107BJ105KAHT	T	106.2/19.3
C6713	4030025230	S.CER	TMK107BJ105KAHT	T	107.4/19.3
C6714	4030025230	S.CER	TMK107BJ105KAHT	T	108.6/19.3
C6715	4030025230	S.CER	TMK107BJ105KAHT	T	109.8/19.3
C6716	4030025230	S.CER	TMK107BJ105KAHT	T	111.0/19.3
C6717	4030025230	S.CER	TMK107BJ105KAHT	T	112.3/19.3
C6718	4030025230	S.CER	TMK107BJ105KAHT	T	113.5/19.3
J6101	6510028210	CON	SJ050010 (TMP-J01X-V6)		
J6401	6510028210	CON	SJ050010 (TMP-J01X-V6)		
J6501	6510018961	S.CON	B2B-PH-SM4-TB (LF) (SN)	T	24.0/89.3
J6701	6510022601	S.CON	30FMN-BMTTR-A-TBT (LF) (SN)	T	119.5/11.0
J6703	6510018971	S.CON	B4B-PH-SM4-TB (LF) (SN)	T	181.4/74.3
F6701	5220000440	HOL	FHA040-01		
F6702	5210001430	FUS	11930011 (BFLP 5A 58V)		
EP6201	6910023820	S.BEA	MPZ2012S101A-T	T	118.7/64.5
EP6202	6910023820	S.BEA	MPZ2012S101A-T	T	114.9/64.5
EP6203	6910023820	S.BEA	MPZ2012S101A-T	T	115.7/82.0
EP6602	6510018330	TER	F4053A		
EP6603	6510018330	TER	F4053A		
EP6604	6910018930	S.BEA	MPZ2012S601A	T	139.6/8.5
EP6605	6910014640	S.BEA	MPZ2012S221A-T	T	174.8/72.4
EP6606	6910014640	S.BEA	MPZ2012S221A-T	T	174.8/68.9
EP6607	6910014640	S.BEA	MPZ2012S221A-T	T	185.0/71.8
EP6608	6910014640	S.BEA	MPZ2012S221A-T	T	185.0/75.3
EP6609	6910019900	S.BEA	MPZ1608S601AT	T	113.5/15.8
EP6610	6910019900	S.BEA	MPZ1608S601AT	T	112.3/15.8
EP6611	6910019900	S.BEA	MPZ1608S601AT	T	111.0/15.8
EP6612	6910019900	S.BEA	MPZ1608S601AT	T	109.8/15.8
EP6613	6910019900	S.BEA	MPZ1608S601AT	T	108.6/15.8
EP6614	6910019900	S.BEA	MPZ1608S601AT	T	107.4/15.8
EP6615	6910019900	S.BEA	MPZ1608S601AT	T	106.2/15.8

Eqv.= This component is equivalent to the REF No. component listed above, and may be substituted on parts orders and repairs.

M.= Mounted side (T: Mounted on the Top side, B: Mounted on the Bottom side)
H/V LOCATION=See the BOARD LAYOUTS for details.

[FILTER UNIT]

REF NO.	PART NO.	DESCRIPTION		M.	H/V LOCATION
D7020	1750001810	S.DIO	L1SS400T1G	T	137.5/93.4
D7361	1750000191	S.DIO	1SS322 (TE85RF)	T	165.3/81.8
D7362	1750000191	S.DIO	1SS322 (TE85RF)	T	165.4/88.5
L7001	6200017810	S.COI	NLV25T-470J-EF	T	161.1/9.7
L7002	6200017810	S.COI	NLV25T-470J-EF	T	141.4/9.9
L7003	6200017810	S.COI	NLV25T-470J-EF	T	119.4/9.9
L7004	6200017810	S.COI	NLV25T-470J-EF	T	109.4/12.1
L7005	6200017630	S.COI	NLV25T-330J-EF	T	88.7/11.2
L7006	6200017630	S.COI	NLV25T-330J-EF	T	66.5/12.2
L7007	6200017530	S.COI	NLV25T-100J-EF	T	38.0/3.9
L7009	6200017530	S.COI	NLV25T-100J-EF	T	6.0/17.6
L7011	6200017810	S.COI	NLV25T-470J-EF	T	150.2/70.5
L7012	6200017810	S.COI	NLV25T-470J-EF	T	121.1/73.3
L7013	6200017810	S.COI	NLV25T-470J-EF	T	111.0/92.5
L7014	6200017810	S.COI	NLV25T-470J-EF	T	90.5/92.0
L7015	6200017630	S.COI	NLV25T-330J-EF	T	69.1/92.4
L7016	6200017630	S.COI	NLV25T-330J-EF	T	48.5/93.3
L7017	6200017530	S.COI	NLV25T-100J-EF	T	41.7/99.2
L7018	6200017530	S.COI	NLV25T-100J-EF	T	7.1/89.4
L7101	6140002830	COI	LR-236		
L7102	6140001990	COI	LR-226 (T68-2)		
L7103	6140002000	COI	LR-227 (T68-2)		
L7131	6140002900	COI	LR-263		
L7132	6140002820	COI	LR-235		
L7133	6140002830	COI	LR-236		
L7161	6140002850	COI	LR-238		
L7162	6140002820	COI	LR-235		
L7163	6140002820	COI	LR-235		
L7191	6140002840	COI	LR-237		
L7192	6140002900	COI	LR-263		
L7193	6140002900	COI	LR-263		
L7221	6140002860	COI	LR-241		
L7222	6140002840	COI	LR-237		
L7223	6140002840	COI	LR-237		
L7251	6140003580	COI	LR-399 (3.5%)		
L7252	6140003570	COI	LR-398 (3.5%)		
L7253	6140003570	COI	LR-398 (3.5%)		
L7281	6140003580	COI	LR-399 (3.5%)		
L7282	6140003570	COI	LR-398 (3.5%)		
L7283	6140003570	COI	LR-398 (3.5%)		
L7311	6140003780	COI	LR-437		
L7312	6140003780	COI	LR-437		
L7313	6140003780	COI	LR-437		
L7351	6200010680	S.COI	C2520C-R22G-A (0.22U)	T	164.4/74.5
L7361	6200017540	S.COI	NLV25T-101J-EF	T	174.0/82.3
L7362	6140003490	COI	LR-391		
L7363	6200017540	S.COI	NLV25T-101J-EF	T	174.0/89.5
L7501	6200017540	S.COI	NLV25T-101J-EF	T	81.0/3.0
R7001	7030021170	S.RES	RMC1-121JTE (120)	T	155.6/9.7
R7002	7030021170	S.RES	RMC1-121JTE (120)	T	135.9/9.7
R7003	7030021170	S.RES	RMC1-121JTE (120)	T	124.7/9.7
R7004	7030021170	S.RES	RMC1-121JTE (120)	T	103.6/10.8
R7005	7030021170	S.RES	RMC1-121JTE (120)	T	83.3/10.7
R7006	7030021170	S.RES	RMC1-121JTE (120)	T	57.2/12.1
R7007	7030021170	S.RES	RMC1-121JTE (120)	T	32.2/6.4
R7009	7030021170	S.RES	RMC1-121JTE (120)	T	10.7/14.3
R7011	7030021170	S.RES	RMC1-121JTE (120)	T	156.8/70.8
R7012	7030021170	S.RES	RMC1-121JTE (120)	T	121.2/78.5
R7013	7030021170	S.RES	RMC1-121JTE (120)	T	105.1/93.0
R7014	7030021170	S.RES	RMC1-121JTE (120)	T	96.5/92.4
R7015	7030021170	S.RES	RMC1-121JTE (120)	T	75.2/93.1
R7016	7030021170	S.RES	RMC1-121JTE (120)	T	54.3/93.2
R7017	7030021170	S.RES	RMC1-121JTE (120)	T	35.9/97.3
R7018	7030021170	S.RES	RMC1-121JTE (120)	T	7.0/83.3
R7020	7030014890	S.RES	RMC1/16-100JTP (10)	T	135.4/94.5
R7361	7030015250	S.RES	RMC1/16-103JTP (10 k)	T	171.8/83.0
R7362	7030015180	S.RES	RMC1/16-272JTP (2.7 k)	T	171.2/80.7
R7363	7030015210	S.RES	RMC1/16-472JTP (4.7 k)	T	168.6/80.7
R7364	7030021210	S.RES	RMC1/2-330JTE (33)	T	156.5/84.1
R7365	7030015250	S.RES	RMC1/16-103JTP (10 k)	T	171.6/89.2
R7366	7030015180	S.RES	RMC1/16-272JTP (2.7 k)	T	171.0/92.1
R7367	7030015210	S.RES	RMC1/16-472JTP (4.7 k)	T	168.3/92.1
R7368	7540000330	S.ABS	CSA70-401L-T	T	160.2/95.0
R7369	7030021220	S.RES	RMC1/2-823JTE (82 k)	T	164.1/95.4
C7001	4030023820	S.CER	0603B104K250CT	T	163.9/10.9
C7002	4030023820	S.CER	0603B104K250CT	T	144.6/10.9
C7003	4030024040	S.CER	0603B472K500CT	T	116.6/10.9
C7004	4030024040	S.CER	0603B472K500CT	T	111.9/13.5
C7005	4030024040	S.CER	0603B472K500CT	T	91.3/13.8
C7006	4030024040	S.CER	0603B472K500CT	T	70.9/13.0
C7007	4030024040	S.CER	0603B472K500CT	T	37.9/7.7
C7009	4030024040	S.CER	0603B472K500CT	T	6.4/25.8
C7011	4030023820	S.CER	0603B104K250CT	T	146.7/69.8
C7012	4030023820	S.CER	0603B104K250CT	T	121.1/71.4
C7013	4030024040	S.CER	0603B472K500CT	T	114.1/91.9
C7014	4030024040	S.CER	0603B472K500CT	T	87.3/91.2
C7015	4030024040	S.CER	0603B472K500CT	T	65.9/91.7
C7016	4030024040	S.CER	0603B472K500CT	T	45.2/91.9
C7017	4030024040	S.CER	0603B472K500CT	T	41.3/96.0
C7018	4030024040	S.CER	0603B472K500CT	T	8.3/92.8
C7020	4030024040	S.CER	0603B472K500CT	T	137.6/94.9
C7021	4030024040	S.CER	0603B472K500CT	T	137.6/96.1
C7101	4030021220	S.CER	GRM31B5C2J681JW01L	T	154.6/24.1
C7102	4030021050	S.CER	GRM31A5C2J561JW01D	T	154.6/26.2
C7103	4030020730	S.CER	GRM31A5C2J471JW01D	T	155.6/31.7
C7104	4030020730	S.CER	GRM31A5C2J471JW01D	T	157.8/31.7
C7105	4030021220	S.CER	GRM31B5C2J681JW01L	T	150.0/33.7
C7106	4030021220	S.CER	GRM31B5C2J681JW01L	T	150.0/35.8
C7107	4030021220	S.CER	GRM31B5C2J681JW01L	T	150.1/38.1

Eqv.= This component is equivalent to the REF No. component listed above, and may be substituted on parts orders and repairs.

[FILTER UNIT]

REF NO.	PART NO.	DESCRIPTION		M.	H/V LOCATION
C7108	4030021030	S.CER	GRM31A5C2J181JW01D	T	150.0/40.2
C7109	4030018480	S.CER	GRM31A5C2J221JW01D	T	174.1/40.0
C7110	4030018340	S.CER	GRM31A5C2J331JW01D	T	176.2/40.0
C7111	4030021220	S.CER	GRM31B5C2J681JW01L	T	151.5/47.2
C7112	4030021220	S.CER	GRM31B5C2J681JW01L	T	153.6/47.2
C7113	4030021220	S.CER	GRM31B5C2J681JW01L	T	164.9/44.7
C7114	4030021220	S.CER	GRM31B5C2J681JW01L	T	167.1/44.7
C7115	4030020800	S.CER	GRM31A5C2J680JW01D	T	171.2/46.3
C7116	4030020820	S.CER	GRM31A5C2J121JW01D	T	171.2/44.2
C7117	4030021220	S.CER	GRM31B5C2J681JW01L	T	161.1/52.5
C7118	4030021220	S.CER	GRM31B5C2J681JW01L	T	161.1/54.6
C7119	4030021220	S.CER	GRM31B5C2J681JW01L	T	161.1/56.8
C7120	4030021220	S.CER	GRM31B5C2J681JW01L	T	154.6/28.3
C7131	4030021220	S.CER	GRM31B5C2J681JW01L	T	149.2/24.1
C7132	4030021050	S.CER	GRM31A5C2J561JW01D	T	149.2/26.2
C7133	4030021050	S.CER	GRM31A5C2J561JW01D	T	130.6/32.5
C7134	4030021050	S.CER	GRM31A5C2J561JW01D	T	130.6/34.7
C7135	4030020730	S.CER	GRM31A5C2J471JW01D	T	149.2/28.4
C7136	4030021220	S.CER	GRM31B5C2J681JW01L	T	149.2/30.5
C7137	4030021220	S.CER	GRM31B5C2J681JW01L	T	144.8/34.5
C7138	4030021040	S.CER	GRM31A5C2J271JW01D	T	133.3/46.8
C7139	4030021040	S.CER	GRM31A5C2J271JW01D	T	130.9/46.8
C7140	4030021040	S.CER	GRM31A5C2J271JW01D	T	128.4/46.8
C7141	4030020720	S.CER	GRM31A5C2J391JW01D	T	148.6/43.1
C7142	4030021050	S.CER	GRM31A5C2J561JW01D	T	146.8/45.6
C7143	4030021050	S.CER	GRM31A5C2J561JW01D	T	146.9/47.7
C7144	4030020820	S.CER	GRM31A5C2J121JW01D	T	145.9/53.5
C7145	4030020820	S.CER	GRM31A5C2J121JW01D	T	148.1/53.5
C7146	4030021050	S.CER	GRM31A5C2J561JW01D	T	152.1/54.8
C7147	4030021220	S.CER	GRM31B5C2J681JW01L	T	152.1/56.9
C7161	4030020730	S.CER	GRM31A5C2J471JW01D	T	111.6/29.5
C7162	4030021030	S.CER	GRM31A5C2J181JW01D	T	111.7/31.7
C7163	4030021030	S.CER	GRM31A5C2J181JW01D	T	121.5/42.9
C7164	4030018350	S.CER	GRM31A5C2J151JW01D	T	121.5/45.0
C7165	4030020720	S.CER	GRM31A5C2J391JW01D	T	112.8/43.7
C7166	4030020720	S.CER	GRM31A5C2J391JW01D	T	112.8/46.0
C7167	4030020810	S.CER	GRM31A5C2J820JW01D	T	105.9/57.6
C7168	4030020800	S.CER	GRM31A5C2J680JW01D	T	108.0/57.6
C7169	4030018340	S.CER	GRM31A5C2J331JW01D	T	102.0/57.4
C7170	4030020730	S.CER	GRM31A5C2J471JW01D	T	102.0/59.5
C7171	4030021020	S.CER	GRM31A5C2J101JW01D	T	113.3/59.7
C7172	4030018350	S.CER	GRM31A5C2J151JW01D	T	103.9/71.5
C7173	4030018350	S.CER	GRM31A5C2J151JW01D	T	103.9/73.9
C7191	4030021030	S.CER	GRM31A5C2J181JW01D	T	106.1/26.1
C7192	4030021020	S.CER	GRM31A5C2J101JW01D	T	106.1/28.3
C7193	4030020820	S.CER	GRM31A5C2J121JW01D	T	103.8/34.5
C7194	4030021040	S.CER	GRM31A5C2J271JW01D	T	106.4/42.8
C7195	4030020820	S.CER	GRM31A5C2J121JW01D	T	106.4/45.0
C7196	4030021000	S.CER	GRM31A5C2J100JW01D	T	101.3/48.2
C7197	4030020820	S.CER	GRM31A5C2J121JW01D	T	102.5/50.3
C7198	4030020720	S.CER	GRM31A5C2J391JW01D	T	89.5/56.9
C7199	4030021030	S.CER	GRM31A5C2J181JW01D	T	87.4/56.9
C7200	4030020760	S.CER	GRM31A5C2J270JW01D	T	93.8/76.2
C7201	4030020770	S.CER	GRM31A5C2J330JW01D	T	95.9/76.3
C7202	4030018350	S.CER	GRM31A5C2J151JW01D	T	100.5/76.1
C7203	4030018350	S.CER	GRM31A5C2J151JW01D	T	100.5/78.3
C7221	4030020810	S.CER	GRM31A5C2J820JW01D	T	79.3/26.6
C7222	4030020810	S.CER	GRM31A5C2J820JW01D	T	80.1/48.9
C7223	4030021040	S.CER	GRM31A5C2J271JW01D	T	72.3/46.1
C7224	4030020820	S.CER	GRM31A5C2J121JW01D	T	72.3/48.2
C7225	4030020780	S.CER	GRM31A5C2J470JW01D	T	77.3/60.2
C7226	4030020810	S.CER	GRM31A5C2J820JW01D	T	77.3/62.5
C7227	4030021040	S.CER	GRM31A5C2J271JW01D	T	67.9/60.9
C7228	4030020820	S.CER	GRM31A5C2J121JW01D	T	67.9/63.0
C7229	4030020810	S.CER	GRM31A5C2J820JW01D	T	77.4/73.8
C7230	4030020810	S.CER	GRM31A5C2J820JW01D	T	68.1/75.4
C7231	4030021020	S.CER	GRM31A5C2J101JW01D	T	68.1/77.7
C7251	4030020780	S.CER	GRM31A5C2J470JW01D	T	70.9/27.6
C7252	4030020800	S.CER	GRM31A5C2J680JW01D	T	54.7/28.2
C7254	4030018350	S.CER	GRM31A5C2J151JW01D	T	69.8/39.6
C7255	4030018350	S.CER	GRM31A5C2J151JW01D	T	69.8/42.3
C7256	4030020810	S.CER	GRM31A5C2J820JW01D	T	62.9/48.1
C7258	4030020810	S.CER	GRM31A5C2J820JW01D	T	60.6/59.8
C7259	4030018350	S.CER	GRM31A5C2J151JW01D	T	60.6/62.0
C7260	4030020750	S.CER	GRM31A5C2J220JW01D	T	48.6/77.1
C7261	4030020810	S.CER	GRM31A5C2J820JW01D	T	60.6/76.1
C7262	4030021020	S.CER	GRM31A5C2J101JW01D	T	60.6/78.2
C7283	4030020790	S.CER	GRM31A5C2J560JW01D	T	37.9/55.5
C7284	4030020810	S.CER	GRM31A5C2J820JW01D	T	35.5/55.5
C7285	4030020780	S.CER	GRM31A5C2J470JW01D	T	39.9/61.0
C7287	4030020820	S.CER	GRM31A5C2J121JW01D	T	34.4/59.8
C7288	4030021020	S.CER	GRM31A5C2J101JW01D	T	34.3/62.0
C7289	4030020760	S.CER	GRM31A5C2J270JW01D	T	43.4/72.7
C7290	4030020820	S.CER	GRM31A5C2J121JW01D	T	33.2/72.6
C7313	4030021200	S.CER	GRM31A5C2J120JW01D	T	17.1/45.9
C7315	4030020770	S.CER	GRM31A5C2J330JW01D	T	34.7/49.4
C7316	4030020820	S.CER	GRM31A5C2J121JW01D	T	23.8/51.0
C7317	4030020750	S.CER	GRM31A5C2J220JW01D	T	7.4/53.0
C7318	4030020740	S.CER	GRM31A5C2J180JW01D	T	9.5/53.0
C7319	4030020800	S.CER	GRM31A5C2J680JW01D	T	25.1/62.4
C7320	4030020820	S.CER	GRM31A5C2J121JW01D	T	25.1/64.5
C7322	4030020750	S.CER	GRM31A5C2J220JW01D	T	6.5/74.9
C7324	4030020770	S.CER	GRM31A5C2J330JW01D	T	24.0/74.2
C7325	4030021010	S.CER	GRM31A5C2J390JW01D	T	21.8/74.2
C7351	4030021020	S.CER	GRM31A5C2J101JW01D	T	160.3/76.8
C7352	4030020740	S.CER	GRM31A5C2J180JW01D	T	164.4/77.3
C7353	4030021020	S.CER	GRM31A5C2J101JW01D	T	168.5/76.7
C7362	4030023860	S.CER	0603B103K500CT	T	160.6/81.0
C7363	4030020780	S.CER	GRM31A5C2J470JW01D	T	169.9/88.9
C7364	4030023940	S.CER	0603B222K500CT	T	160.6/89.3
C7367	4030021020	S.CER	GRM31A5C2J101JW01D	T	161.4/83.5
C7368	4030020780	S.CER	GRM31A5C2J470JW01D	T	167.7/83.7
C7370	4030024580	S.CER	GRM31A5C2J1R0CW01D	T	147.5/90.6
C7371	4030024620	S.CER	GRM31A5C2J6R0DW01D	T	147.5/92.8
C7372	4030020810	S.CER	GRM31A5C2J820JW01D	T	161.4/86.0

M.= Mounted side (T: Mounted on the Top side, B: Mounted on the Bottom side)
H/V LOCATION=See the BOARD LAYOUTS for details.

[FILTER UNIT]

REF NO.	PART NO.	DESCRIPTION		M.	H/V LOCATION
C7511	4030024040	S.CER	0603B472K500CT	T	84.9/3.0
RL7001	6330002140	REL	G5Q-1A DC5V		
RL7002	6330002140	REL	G5Q-1A DC5V		
RL7003	6330002140	REL	G5Q-1A DC5V		
RL7004	6330002140	REL	G5Q-1A DC5V		
RL7005	6330002140	REL	G5Q-1A DC5V		
RL7006	6330002140	REL	G5Q-1A DC5V		
RL7007	6330002140	REL	G5Q-1A DC5V		
RL7009	6330002140	REL	G5Q-1A DC5V		
RL7011	6330002140	REL	G5Q-1A DC5V		
RL7012	6330002140	REL	G5Q-1A DC5V		
RL7013	6330002140	REL	G5Q-1A DC5V		
RL7014	6330002140	REL	G5Q-1A DC5V		
RL7015	6330002140	REL	G5Q-1A DC5V		
RL7016	6330002140	REL	G5Q-1A DC5V		
RL7017	6330002140	REL	G5Q-1A DC5V		
RL7018	6330002140	REL	G5Q-1A DC5V		
RL7020	6330000781	REL	AGP2013F		
J7001	6510028210	CON	SJ050010 (TMP-J01X-V6)		
J7311	6510028210	CON	SJ050010 (TMP-J01X-V6)		
J7321	6510028210	CON	SJ050010 (TMP-J01X-V6)		
J7501	6510022611	S.CON	16FMN-BMTTR-A-TBT (LF) (SN)	T	69.0/6.8
EP7501	6910018240	S.BEA	MMZ1608Y152CT	T	87.6/3.9
EP7502	6910018240	S.BEA	MMZ1608Y152CT	T	88.4/5.1
EP7503	6910018240	S.BEA	MMZ1608Y152CT	T	89.4/6.4
EP7504	6910018240	S.BEA	MMZ1608Y152CT	T	90.4/7.7
EP7505	6910018240	S.BEA	MMZ1608Y152CT	T	91.3/8.9
EP7506	6910018240	S.BEA	MMZ1608Y152CT	T	58.2/9.2
EP7507	6910018240	S.BEA	MMZ1608Y152CT	T	56.8/3.9
EP7509	6910018240	S.BEA	MMZ1608Y152CT	T	58.2/7.6

Eqv.= This component is equivalent to the REF No. component listed above, and may be substituted on parts orders and repairs.

M.= Mounted side (T: Mounted on the Top side, B: Mounted on the Bottom side)
H/V LOCATION=See the BOARD LAYOUTS for details.

[LOGIC UNIT]

REF NO.	PART NO.	DESCRIPTION		M.	H/V LOCATION
IC9001	1140018911	S.IC	STM32F429IIT6	B	75.6/47.0
IC9051	1190003620	S.IC	TPS61161ADRVR	B	39.5/80.3
IC9071	1190003620	S.IC	TPS61161ADRVR	B	39.5/68.0
IC9091	1110005771	S.IC	S-80942CNMC-G9CT2G	B	106.1/67.7
IC9121	1130017040	S.IC	MT48LC4M16A2P-6A IT	B	41.1/49.5
IC9252	1180003500	S.REG	NJM7808DL1A-TE1-#FZZB	B	192.8/71.5
IC9254	1180004770	S.REG	NJM2855DL1-33-TE1-#HZZB	B	192.8/58.8
IC9301	1110008550	S.IC	NJM2904CRB1-TE1-#HMZR	B	149.8/57.1
IC9402	1130018870	S.IC	TC7WH14FKLJ	B	95.8/32.8
Q9051	1550000500	S.FET	RZF020P01TL	B	47.3/80.8
Q9302	1530004140	S.TRA	L2SC4081RT1G	B	152.6/45.5
Q9303	1590004690	S.TRA	LDTC143ZET1G	B	169.2/47.4
Q9401	1590004690	S.TRA	LDTC143ZET1G	B	118.0/30.4
Q9402	1530004140	S.TRA	L2SC4081RT1G	B	96.0/28.4
Q9405	1590004310	S.TRA	LDTA114EET1G	B	100.0/31.6
Q9408	1590004690	S.TRA	LDTC143ZET1G	B	19.7/25.7
D9051	1750001520	S.DIO	CUS04 (TE85LQ)	B	36.3/76.0
D9071	1750001520	S.DIO	CUS04 (TE85LQ)	B	35.8/64.3
D9153	1750001810	S.DIO	L1SS400T1G	B	18.3/27.5
D9301	1750000370	S.DIO	DA221 TL	B	95.5/65.5
D9302	1750000370	S.DIO	DA221 TL	B	92.2/65.5
D9303	1750000370	S.DIO	DA221 TL	B	167.2/47.4
D9401	1750001810	S.DIO	L1SS400T1G	B	57.4/16.1
D9402	1750001810	S.DIO	L1SS400T1G	B	57.4/14.3
D9403	1750004050	S.DIO	1SS355VM TE-17	B	98.2/28.6
D9404	1750001810	S.DIO	L1SS400T1G	B	103.2/19.6
X9091	6050014950	S.XTA	CR-1084 (9.8304 MHz)	B	71.3/27.8
L9051	6200017580	S.COI	NLV25T-1R0J-EF	B	35.6/84.3
L9052	6200014850	S.COI	LQH44PN220MP0L	B	35.8/79.5
L9071	6200017580	S.COI	NLV25T-1R0J-EF	B	35.8/73.5
L9072	6200014850	S.COI	LQH44PN220MP0L	B	35.8/69.0
L9202	6200017540	S.COI	NLV25T-101J-EF	B	158.0/77.6
L9203	6200017540	S.COI	NLV25T-101J-EF	B	155.5/77.6
L9206	6200017700	S.COI	NLV32T-221J-EF	B	144.1/77.3
L9207	6200017700	S.COI	NLV32T-221J-EF	B	147.5/77.3
L9301	6200017530	S.COI	NLV25T-100J-EF	B	149.7/62.5
L9404	6200017540	S.COI	NLV25T-101J-EF	B	13.6/21.8
L9405	6200017540	S.COI	NLV25T-101J-EF	B	13.6/24.3
L9406	6200017540	S.COI	NLV25T-101J-EF	B	6.6/26.8
L9407	6200017680	S.COI	NLV32T-100J-EF	B	105.4/16.0
R9001	7030016110	S.RES	RMC1/16S-473JTH (47 k)	B	76.1/87.8
R9002	7030016110	S.RES	RMC1/16S-473JTH (47 k)	B	72.2/63.6
R9004	7030015910	S.RES	RMC1/16S-101JTH (100)	B	90.8/41.7
R9005	7030015910	S.RES	RMC1/16S-101JTH (100)	B	90.8/48.7
R9006	7030015910	S.RES	RMC1/16S-101JTH (100)	B	53.1/36.8
R9007	7030015910	S.RES	RMC1/16S-101JTH (100)	B	54.0/36.8
R9009	7030015910	S.RES	RMC1/16S-101JTH (100)	B	54.9/36.8
R9010	7030016050	S.RES	RMC1/16S-102JTH (1 k)	B	73.2/62.2
R9011	7030016050	S.RES	RMC1/16S-102JTH (1 k)	B	84.8/62.2
R9013	7030015910	S.RES	RMC1/16S-101JTH (100)	B	87.5/62.2
R9014	7030016020	S.RES	RMC1/16S-104JTH (100 k)	B	92.2/55.9
R9016	7030016020	S.RES	RMC1/16S-104JTH (100 k)	B	93.1/55.9
R9017	7030015910	S.RES	RMC1/16S-101JTH (100)	B	81.5/62.2
R9018	7030016560	S.RES	RMC1/16SJPTH	B	60.5/40.1
R9019	7030015910	S.RES	RMC1/16S-101JTH (100)	B	78.1/62.2
R9020	7410001350	S.ARR	EXB24V102JX (1 k)	B	79.4/63.1
R9021	7410001330	S.ARR	EXB24V101JX	B	74.5/63.1
R9022	7030016050	S.RES	RMC1/16S-102JTH (1 k)	B	85.7/62.2
R9023	7030015910	S.RES	RMC1/16S-101JTH (100)	B	75.7/62.2
R9024	7410001130	S.ARR	EXB28V102JX	B	69.3/63.1
R9025	7410001130	S.ARR	EXB28V102JX	B	66.8/63.1
R9026	7030016050	S.RES	RMC1/16S-102JTH (1 k)	B	90.8/54.6
R9027	7030015910	S.RES	RMC1/16S-101JTH (100)	B	90.8/52.7
R9028	7410001130	S.ARR	EXB28V102JX	B	93.1/50.0
R9029	7410001230	S.ARR	EXB28V101JX	B	91.0/46.7
R9030	7030016050	S.RES	RMC1/16S-102JTH (1 k)	B	92.9/45.0
R9031	7410001330	S.ARR	EXB24V101JX	B	91.0/40.0
R9032	7030016050	S.RES	RMC1/16S-102JTH (1 k)	B	61.9/60.2
R9033	7410001130	S.ARR	EXB28V102JX	B	60.1/60.2
R9034	7410001330	S.ARR	EXB24V101JX	B	60.2/51.5
R9035	7410001330	S.ARR	EXB24V101JX	B	60.2/42.3
R9036	7030016050	S.RES	RMC1/16S-102JTH (1 k)	B	60.5/41.0
R9037	7030016050	S.RES	RMC1/16S-102JTH (1 k)	B	60.5/39.2
R9038	7410001330	S.ARR	EXB24V101JX	B	55.1/40.3
R9039	7030016020	S.RES	RMC1/16S-104JTH (100 k)	B	60.5/43.5
R9040	7410001130	S.ARR	EXB28V102JX	B	86.1/31.6
R9041	7030016050	S.RES	RMC1/16S-102JTH (1 k)	B	84.3/31.8
R9042	7410001350	S.ARR	EXB24V102JX (1 k)	B	74.7/31.6
R9043	7410001130	S.ARR	EXB28V102JX	B	60.2/30.4
R9044	7410001330	S.ARR	EXB24V101JX	B	60.2/32.4
R9045	7410001130	S.ARR	EXB28V102JX	B	60.2/34.4
R9046	7030015910	S.RES	RMC1/16S-101JTH (100)	B	90.8/58.2
R9047	7030015910	S.RES	RMC1/16S-101JTH (100)	B	57.3/59.1
R9051	7030016020	S.RES	RMC1/16S-104JTH (100 k)	B	44.8/65.0
R9053	7030015970	S.RES	RMC1/16S-103JTH (10 k)	B	67.1/88.4
R9055	7030016600	S.RES	RMC1/16S-8R2JTH (8.2)	B	46.3/76.5
R9057	7030016130	S.RES	RMC1/16S-150JTH (15)	B	46.3/75.5
R9058	7030016020	S.RES	RMC1/16S-104JTH (100 k)	B	33.0/79.1
R9059	7030016110	S.RES	RMC1/16S-473JTH (47 k)	B	47.1/82.9
R9060	7030016110	S.RES	RMC1/16S-473JTH (47 k)	B	47.1/78.6
R9071	7030016150	S.RES	RMC1/16S-100JTH (10)	B	43.9/61.4
R9073	7030016020	S.RES	RMC1/16S-104JTH (100 k)	B	33.0/68.6
R9091	7030016020	S.RES	RMC1/16S-104JTH (100 k)	B	64.8/63.6
R9092	7030016020	S.RES	RMC1/16S-104JTH (100 k)	B	84.5/63.7
R9093	7030015910	S.RES	RMC1/16S-101JTH (100)	B	70.8/31.9

Eqv.= This component is equivalent to the REF No. component listed above, and may be substituted on parts orders and repairs.

[LOGIC UNIT]

REF NO.	PART NO.	DESCRIPTION		M.	H/V LOCATION
R9094	7030016560	S.RES	RMC1/16SJPTH	B	70.3/30.5
R9095	7030016560	S.RES	RMC1/16SJPTH	B	73.5/31.9
R9096	7030016060	S.RES	RMC1/16S-105JTH (1 M)	B	72.6/31.9
R9097	7030016360	S.RES	RMC1/16S-123JTH (12 k)	B	103.8/68.8
R9098	7030016110	S.RES	RMC1/16S-473JTH (47 k)	B	106.5/70.6
R9099	7030016110	S.RES	RMC1/16S-473JTH (47 k)	B	106.4/71.8
R9121	7030016020	S.RES	RMC1/16S-104JTH (100 k)	B	49.2/45.1
R9122	7030016020	S.RES	RMC1/16S-104JTH (100 k)	B	49.2/46.0
R9123	7410001230	S.ARR	EXB28V101JX	B	49.5/56.4
R9124	7410001230	S.ARR	EXB28V101JX	B	49.5/52.1
R9125	7410001230	S.ARR	EXB28V101JX	B	49.5/47.8
R9126	7410001230	S.ARR	EXB28V101JX	B	49.5/43.4
R9127	7410001230	S.ARR	EXB28V101JX	B	49.5/40.3
R9128	7410001230	S.ARR	EXB28V101JX	B	32.8/57.9
R9129	7410001230	S.ARR	EXB28V101JX	B	32.8/52.5
R9130	7410001230	S.ARR	EXB28V101JX	B	32.8/46.7
R9131	7410001230	S.ARR	EXB28V101JX	B	32.8/44.2
R9132	7410001330	S.ARR	EXB24V101JX	B	32.9/39.7
R9151	7030016560	S.RES	RMC1/16SJPTH	B	12.3/32.4
R9202	7030021200	S.RES	RMC1/2-JPTE (JPW)	B	145.1/88.6
R9301	7030016110	S.RES	RMC1/16S-473JTH (47 k)	B	95.4/67.2
R9302	7030016110	S.RES	RMC1/16S-473JTH (47 k)	B	92.1/67.2
R9303	7030016050	S.RES	RMC1/16S-102JTH (1 k)	B	95.4/69.3
R9304	7030016050	S.RES	RMC1/16S-102JTH (1 k)	B	92.1/69.3
R9305	7030015990	S.RES	RMC1/16S-683JTH (68 k)	B	170.5/49.1
R9306	7030016300	S.RES	RMC1/16S-332JTH (3.3 k)	B	155.5/55.1
R9307	7030016050	S.RES	RMC1/16S-102JTH (1 k)	B	155.5/53.6
R9309	7030015990	S.RES	RMC1/16S-683JTH (68 k)	B	170.7/52.4
R9310	7030016090	S.RES	RMC1/16S-223JTH (22 k)	B	153.0/47.4
R9311	7030016290	S.RES	RMC1/16S-222JTH (2.2 k)	B	149.9/42.3
R9312	7030016020	S.RES	RMC1/16S-104JTH (100 k)	B	153.0/49.7
R9313	7030016140	S.RES	RMC1/16S-124JTH (120 k)	B	153.5/59.7
R9314	7030016050	S.RES	RMC1/16S-102JTH (1 k)	B	152.7/51.0
R9315	7030016110	S.RES	RMC1/16S-473JTH (47 k)	B	152.7/52.3
R9316	7030015930	S.RES	RMC1/16S-471JTH (470)	B	154.0/54.4
R9317	7030016290	S.RES	RMC1/16S-222JTH (2.2 k)	B	149.9/43.6
R9319	7030015950	S.RES	RMC1/16S-152JTH (1.5 k)	B	152.7/43.6
R9320	7030016560	S.RES	RMC1/16SJPTH	B	156.8/44.9
R9321	7030016560	S.RES	RMC1/16SJPTH	B	155.5/56.4
R9324	7030016560	S.RES	RMC1/16SJPTH	B	147.3/59.0
R9401	7030016050	S.RES	RMC1/16S-102JTH (1 k)	B	118.0/32.6
R9402	7030015960	S.RES	RMC1/16S-472JTH (4.7 k)	B	16.0/12.9
R9403	7030016110	S.RES	RMC1/16S-473JTH (47 k)	B	60.7/16.1
R9406	7030016020	S.RES	RMC1/16S-104JTH (100 k)	B	60.5/17.4
R9407	7030016300	S.RES	RMC1/16S-332JTH (3.3 k)	B	143.8/42.4
R9408	7030015910	S.RES	RMC1/16S-101JTH (100)	B	143.8/43.7
R9409	7030016250	S.RES	RMC1/16S-220JTH (22)	B	16.0/14.3
R9410	7030015970	S.RES	RMC1/16S-103JTH (10 k)	B	13.0/12.9
R9411	7030016020	S.RES	RMC1/16S-104JTH (100 k)	B	95.6/37.7
R9412	7030016380	S.RES	RMC1/16S-183JTH (18 k)	B	94.1/28.6
R9413	7030016020	S.RES	RMC1/16S-104JTH (100 k)	B	96.9/37.7
R9414	7030016110	S.RES	RMC1/16S-473JTH (47 k)	B	98.2/31.8
R9415	7030015970	S.RES	RMC1/16S-103JTH (10 k)	B	116.6/18.7
R9417	7030016560	S.RES	RMC1/16SJPTH	B	53.9/14.3
R9418	7030016260	S.RES	RMC1/16S-330JTH (33)	B	120.6/18.7
R9419	7030016260	S.RES	RMC1/16S-330JTH (33)	B	117.9/18.7
R9420	7030016020	S.RES	RMC1/16S-104JTH (100 k)	B	103.2/14.2
R9421	7030015910	S.RES	RMC1/16S-101JTH (100)	B	103.2/16.9
R9422	7030016060	S.RES	RMC1/16S-105JTH (1 M)	B	104.8/19.5
R9423	7030016560	S.RES	RMC1/16SJPTH	B	143.8/45.2
R9424	7030016360	S.RES	RMC1/16S-123JTH (12 k)	B	60.7/14.3
R9425	7030016000	S.RES	RMC1/16S-823JTH (82 k)	B	46.3/15.2
R9426	7030015980	S.RES	RMC1/16S-333JTH (33 k)	B	46.3/17.7
R9427	7030016560	S.RES	RMC1/16SJPTH	B	99.7/28.6
R9428	7030016050	S.RES	RMC1/16S-102JTH (1 k)	B	99.5/34.3
R9432	7030016560	S.RES	RMC1/16SJPTH	B	121.9/18.7
C9001	4030022160	S.CER	GRM033B31A104KE84D	B	65.0/62.7
C9002	4030022150	S.CER	GRM033B31E103KA12D	B	90.4/56.7
C9003	4030022140	S.CER	GRM033B31H102KA12D	B	79.3/32.3
C9004	4030022160	S.CER	GRM033B31A104KE84D	B	71.6/62.7
C9005	4030022150	S.CER	GRM033B31E103KA12D	B	90.4/50.4
C9006	4030022140	S.CER	GRM033B31H102KA12D	B	76.1/32.3
C9007	4030022160	S.CER	GRM033B31A104KE84D	B	77.1/62.7
C9008	4030022150	S.CER	GRM033B31E103KA12D	B	90.4/44.2
C9009	4030022140	S.CER	GRM033B31H102KA12D	B	67.4/31.6
C9010	4030022160	S.CER	GRM033B31A104KE84D	B	83.8/62.7
C9011	4030022150	S.CER	GRM033B31E103KA12D	B	90.8/38.7
C9012	4030022140	S.CER	GRM033B31H102KA12D	B	60.9/38.0
C9013	4030022160	S.CER	GRM033B31A104KE84D	B	91.3/56.7
C9014	4030022150	S.CER	GRM033B31E103KA12D	B	79.3/31.4
C9015	4030022140	S.CER	GRM033B31H102KA12D	B	60.9/45.4
C9016	4030022160	S.CER	GRM033B31A104KE84D	B	91.3/50.4
C9017	4030022150	S.CER	GRM033B31E103KA12D	B	76.1/31.4
C9018	4030022140	S.CER	GRM033B31H102KA12D	B	60.9/49.5
C9019	4030022160	S.CER	GRM033B31A104KE84D	B	91.3/44.2
C9020	4030022150	S.CER	GRM033B31E103KA12D	B	66.5/31.6
C9021	4030022140	S.CER	GRM033B31H102KA12D	B	65.0/61.8
C9022	4030022160	S.CER	GRM033B31A104KE84D	B	90.8/37.8
C9023	4030022150	S.CER	GRM033B31E103KA12D	B	60.0/38.0
C9024	4030022140	S.CER	GRM033B31H102KA12D	B	71.6/62.1
C9025	4030019560	S.CER	GRM21BB31C106KE15L	B	89.5/63.4
C9026	4030022160	S.CER	GRM033B31A104KE84D	B	65.6/31.6
C9027	4030022150	S.CER	GRM033B31E103KA12D	B	60.0/45.4
C9028	4030022140	S.CER	GRM033B31H102KA12D	B	77.1/61.8
C9029	4030022160	S.CER	GRM033B31A104KE84D	B	64.7/31.6
C9030	4030022150	S.CER	GRM033B31E103KA12D	B	60.0/49.5
C9031	4030022140	S.CER	GRM033B31H102KA12D	B	83.8/61.8
C9032	4030025420	S.CER	GRM033R61A105ME15D	B	82.1/64.8
C9033	4030025420	S.CER	GRM033R61A105ME15D	B	60.0/53.5
C9034	4030025700	S.CER	GRM033R71E472KE14D	B	59.0/41.0
C9035	4030025420	S.CER	GRM033R61A105ME15D	B	82.1/66.0
C9036	4030024900	S.CER	GRM033R61A224KE90D	B	82.1/63.7
C9037	4030025420	S.CER	GRM033R61A105ME15D	B	60.0/54.7

M.= Mounted side (T: Mounted on the Top side, B: Mounted on the Bottom side)
H/V LOCATION=See the BOARD LAYOUTS for details.

[LOGIC UNIT]

REF NO.	PART NO.	DESCRIPTION		M.	H/V LOCATION
C9038	4030024900	S.CER	GRM033R61A224KE90D	B	60.0/55.7
C9039	4030022140	S.CER	GRM033B31H102KA12D	B	69.8/32.0
C9041	4030025040	S.CER	GRM0332C1H220JA01D	T	76.4/52.8
C9051	4030022140	S.CER	GRM033B31H102KA12D	B	75.7/98.6
C9052	4030022160	S.CER	GRM033B31A104KE84D	B	76.7/98.6
C9053	4030025040	S.CER	GRM0332C1H220JA01D	B	47.0/67.3
C9054	4030022140	S.CER	GRM033B31H102KA12D	B	46.1/67.3
C9055	4030022160	S.CER	GRM033B31A104KE84D	B	45.2/67.3
C9056	4030025420	S.CER	GRM033R61A105ME15D	B	47.9/67.3
C9057	4030022140	S.CER	GRM033B31H102KA12D	B	46.3/74.3
C9058	4030022140	S.CER	GRM033B31H102KA12D	B	39.0/82.0
C9059	4550007370	S.TAN	F931V225MBABMA	B	40.0/84.3
C9060	4030022140	S.CER	GRM033B31H102KA12D	B	38.3/86.9
C9061	4030024900	S.CER	GRM033R61A224KE90D	B	41.5/80.0
C9062	4030019560	S.CER	GRM21BB31C106KE15L	B	39.0/77.0
C9063	4030022140	S.CER	GRM033B31H102KA12D	B	45.3/73.0
C9064	4030019560	S.CER	GRM21BB31C106KE15L	B	40.8/77.0
C9065	4030019560	S.CER	GRM21BB31C106KE15L	B	42.5/77.0
C9066	4030019560	S.CER	GRM21BB31C106KE15L	B	44.3/77.0
C9071	4030022140	S.CER	GRM033B31H102KA12D	B	38.8/69.7
C9072	4550007370	S.TAN	F931V225MBABMA	B	41.5/71.3
C9073	4030022140	S.CER	GRM033B31H102KA12D	B	38.3/74.3
C9074	4030024900	S.CER	GRM033R61A224KE90D	B	41.8/67.7
C9075	4030022140	S.CER	GRM033B31H102KA12D	B	37.0/61.5
C9076	4030019560	S.CER	GRM21BB31C106KE15L	B	37.6/64.3
C9077	4030019560	S.CER	GRM21BB31C106KE15L	B	39.3/64.3
C9078	4030019560	S.CER	GRM21BB31C106KE15L	B	41.1/64.3
C9079	4030019560	S.CER	GRM21BB31C106KE15L	B	42.8/64.3
C9091	4030022100	S.CER	GRM0332C1H100JA01D	B	73.2/30.5
C9092	4030022100	S.CER	GRM0332C1H100JA01D	B	71.7/31.1
C9094	4030022150	S.CER	GRM033B31E103KA12D	B	103.4/67.0
C9095	4030022140	S.CER	GRM033B31H102KA12D	B	105.1/70.0
C9096	4030022150	S.CER	GRM033B31E103KA12D	B	106.4/69.8
C9097	4030025910	S.CER	GRM033B31C393KE84D	B	105.4/65.6
C9098	4030025700	S.CER	GRM033R71E472KE14D	B	56.6/31.3
C9099	4030025700	S.CER	GRM033R71E472KE14D	B	56.6/30.1
C9100	4030025700	S.CER	GRM033R71E472KE14D	B	56.6/28.9
C9121	4030022140	S.CER	GRM033B31H102KA12D	B	49.2/61.3
C9122	4030022150	S.CER	GRM033B31E103KA12D	B	49.2/60.4
C9123	4030022160	S.CER	GRM033B31A104KE84D	B	49.2/59.5
C9124	4030022160	S.CER	GRM033B31A104KE84D	B	49.2/58.6
C9125	4030022160	S.CER	GRM033B31A104KE84D	B	48.8/54.1
C9126	4030022160	S.CER	GRM033B31A104KE84D	B	48.8/49.8
C9127	4030022160	S.CER	GRM033B31A104KE84D	B	49.2/38.5
C9128	4030022140	S.CER	GRM033B31H102KA12D	B	32.6/55.5
C9129	4030022150	S.CER	GRM033B31E103KA12D	B	32.6/50.0
C9130	4030022160	S.CER	GRM033B31A104KE84D	B	33.5/55.5
C9131	4030022160	S.CER	GRM033B31A104KE84D	B	33.5/50.0
C9151	4030022080	S.CER	GRM0332C1H101JA01D	B	12.3/33.7
C9167	4030022150	S.CER	GRM033B31E103KA12D	B	11.7/33.7
C9168	4030025700	S.CER	GRM033R71E472KE14D	B	18.3/26.5
C9169	4030022150	S.CER	GRM033B31E103KA12D	B	18.0/25.5
C9201	4030022080	S.CER	GRM0332C1H101JA01D	B	158.5/73.9
C9203	4030025700	S.CER	GRM033R71E472KE14D	B	155.8/73.9
C9204	4030025700	S.CER	GRM033R71E472KE14D	B	185.7/78.1
C9205	4030022120	S.CER	GRM0332C1H470JA01D	B	143.8/73.2
C9206	4030022120	S.CER	GRM0332C1H470JA01D	B	147.2/73.2
C9207	4510010450	S.ELE	EEEFT1C102AP	B	168.2/80.9
C9208	4510010450	S.ELE	EEEFT1C102AP	B	179.0/80.9
C9251	4510008120	S.ELE	16 CE 100 BS	B	200.0/59.3
C9252	4030022160	S.CER	GRM033B31A104KE84D	B	194.6/64.1
C9253	4030022150	S.CER	GRM033B31E103KA12D	B	191.1/64.1
C9254	4510007310	S.ELE	16 CE 10 BS	B	186.8/58.2
C9259	4510007310	S.ELE	16 CE 10 BS	B	186.8/70.9
C9260	4030025700	S.CER	GRM033R71E472KE14D	B	191.4/76.9
C9261	4030025700	S.CER	GRM033R71E472KE14D	B	194.3/76.9
C9262	4510008120	S.ELE	16 CE 100 BS	B	200.0/72.0
C9301	4030025700	S.CER	GRM033R71E472KE14D	B	155.4/52.3
C9302	4510008110	S.ELE	16 CE 22 BS	B	157.0/61.6
C9303	4030025700	S.CER	GRM033R71E472KE14D	B	153.5/62.5
C9304	4510007310	S.ELE	16 CE 10 BS	B	148.7/47.3
C9305	4510007310	S.ELE	16 CE 10 BS	B	156.5/48.6
C9306	4510007280	S.ELE	50 CE 2R2 BS	B	148.7/38.6
C9307	4510007310	S.ELE	16 CE 10 BS	B	173.4/49.2
C9308	4510008980	S.ELE	EEEHB1C470P	B	162.5/49.7
C9309	4510008600	S.ELE	EEE1CA4R7NR	B	178.2/49.2
C9310	4030025700	S.CER	GRM033R71E472KE14D	B	149.8/52.3
C9311	4030025700	S.CER	GRM033R71E472KE14D	B	152.2/62.5
C9312	4510009250	S.ELE	EEEFK1C471P	B	164.3/63.1
C9313	4030025860	S.CER	GRM0332C1H121JA01D	B	150.8/53.8
C9401	4030022160	S.CER	GRM033B31A104KE84D	B	117.7/28.7
C9402	4510008120	S.ELE	16 CE 100 BS	B	18.2/8.0
C9403	4510007310	S.ELE	16 CE 10 BS	B	64.2/16.7
C9404	4510008120	S.ELE	16 CE 100 BS	B	11.1/8.5
C9405	4510007310	S.ELE	16 CE 10 BS	B	100.1/15.9
C9406	4030025700	S.CER	GRM033R71E472KE14D	B	15.7/16.8
C9407	4030025700	S.CER	GRM033R71E472KE14D	B	16.2/24.0
C9408	4030025700	S.CER	GRM033R71E472KE14D	B	14.8/13.0
C9411	4030025700	S.CER	GRM033R71E472KE14D	B	16.0/19.2
C9414	4030025700	S.CER	GRM033R71E472KE14D	B	60.7/18.3
C9415	4510008110	S.ELE	16 CE 22 BS	B	143.4/37.9
C9416	4030025700	S.CER	GRM033R71E472KE14D	B	45.8/19.0
C9417	4510008980	S.ELE	EEEHB1C470P	B	41.0/16.7
C9419	4030022150	S.CER	GRM033B31E103KA12D	B	98.2/34.6
C9421	4030022160	S.CER	GRM033B31A104KE84D	B	20.7/27.4
RL9151	6310000110	S.REL	AGQ200S12	B	17.7/33.8
J9051	6510027570	S.CON	B7B-ZR-SM4-TF (LF) (SN)	B	68.6/95.4
J9052	6510027111	S.CON	08FLT-SM2-TB (LF) (SN) (M)	B	79.8/96.3
J9053	6510031070	S.CON	AYF534035	T	56.9/64.5
J9091	6510022692	S.CON	06FLT-SM2-TB (LF) (SN) (M)	B	155.4/32.3
J9092	6510022692	S.CON	06FLT-SM2-TB (LF) (SN) (M)	B	207.1/26.9

Eqv.= This component is equivalent to the REF No. component listed above, and may be substituted on parts orders and repairs.

[LOGIC UNIT]

REF NO.	PART NO.	DESCRIPTION		M.	H/V LOCATION
J9151	6510014961	S.CON	B2B-ZR-SM4-TF (LF) (SN)	B	6.9/34.1
J9201	6510022031	S.CON	B10B-ZR-SM4-TF (LF) (SN)	B	151.1/84.2
J9401	6510022621	S.CON	10FMN-BMTTR-A-TBT (LF) (SN)	B	7.7/19.3
J9402	6510022621	S.CON	10FMN-BMTTR-A-TBT (LF) (SN)	B	120.4/14.2
DS9001	5030004580	LCD	RFE430V-AZH-DNN-000		
DS9071	5040003950	S.LED	SSC-WH104-NZ	T	10.9/15.8
DS9072	5040003950	S.LED	SSC-WH104-NZ	T	47.2/10.2
DS9073	5040003950	S.LED	SSC-WH104-NZ	T	69.6/9.8
DS9074	5040003950	S.LED	SSC-WH104-NZ	T	92.0/9.8
DS9075	5040003950	S.LED	SSC-WH104-NZ	T	114.4/10.2
DS9076	5040003950	S.LED	SSC-WH104-NZ	T	186.4/28.7
DS9077	5040003950	S.LED	SSC-WH104-NZ	T	207.1/29.4
DS9078	5040003950	S.LED	SSC-WH104-NZ	T	210.4/80.2
DS9079	5040003950	S.LED	SSC-WH104-NZ	T	210.4/55.2
DS9080	5040003950	S.LED	SSC-WH104-NZ	T	197.4/55.2
DS9081	5040003950	S.LED	SSC-WH104-NZ	T	184.4/55.2
DS9082	5040003950	S.LED	SSC-WH104-NZ	T	155.4/52.7
DS9083	5040003950	S.LED	SSC-WH104-NZ	T	147.3/69.9
DS9084	5040003950	S.LED	SSC-WH104-NZ	T	163.7/86.3
DS9085	5040003950	S.LED	SSC-WH104-NZ	T	184.4/80.2
DS9086	5040003950	S.LED	SSC-WH104-NZ	T	197.4/80.2
S9071	2260002740	S.SWI	LS8J2M-T	T	47.2/16.2
S9072	2260002740	S.SWI	LS8J2M-T	T	69.6/15.8
S9073	2260002740	S.SWI	LS8J2M-T	T	92.0/15.8
S9074	2260002740	S.SWI	LS8J2M-T	T	114.4/16.2
S9075	2260002740	S.SWI	LS8J2M-T	T	10.8/21.3
S9076	2260002740	S.SWI	LS8J2M-T	T	155.4/90.0
S9077	2260002740	S.SWI	LS8J2M-T	T	143.4/78.0
S9078	2260002740	S.SWI	LS8J2M-T	T	155.4/78.0
S9079	2260002740	S.SWI	LS8J2M-T	T	167.4/78.0
S9080	2260002740	S.SWI	LS8J2M-T	T	155.4/66.0
S9081	2260002740	S.SWI	LS8J2M-T	T	147.1/52.7
S9082	2260002740	S.SWI	LS8J2M-T	T	163.7/52.7
S9083	2260002740	S.SWI	LS8J2M-T	T	184.4/86.4
S9084	2260002740	S.SWI	LS8J2M-T	T	197.4/86.4
S9085	2260002740	S.SWI	LS8J2M-T	T	210.4/86.4
S9086	2260002740	S.SWI	LS8J2M-T	T	184.4/73.9
S9087	2260002740	S.SWI	LS8J2M-T	T	197.4/73.9
S9088	2260002740	S.SWI	LS8J2M-T	T	210.4/73.9
S9089	2260002740	S.SWI	LS8J2M-T	T	184.4/61.4
S9090	2260002740	S.SWI	LS8J2M-T	T	197.4/61.4
S9091	2260002740	S.SWI	LS8J2M-T	T	210.4/61.4
S9092	2260002740	S.SWI	LS8J2M-T	T	184.4/48.9
S9093	2260002740	S.SWI	LS8J2M-T	T	197.4/48.9
S9094	2260002740	S.SWI	LS8J2M-T	T	210.4/48.9
S9095	2260002740	S.SWI	LS8J2M-T	T	186.4/34.9
S9096	2260002740	S.SWI	LS8J2M-T	T	208.4/34.9
EP9001	6910019100	S.BEA	MPZ1608S101AT	B	88.5/69.7
EP9002	6910025230	S.BEA	BLM15BD221SN1D	B	52.2/67.4
EP9003	6910025230	S.BEA	BLM15BD221SN1D	B	51.3/70.8
EP9004	6910025230	S.BEA	BLM15BD221SN1D	B	62.4/70.8
EP9005	6910025230	S.BEA	BLM15BD221SN1D	B	56.1/72.3
EP9006	6910025230	S.BEA	BLM15BD221SN1D	B	53.5/70.8
EP9007	6910025230	S.BEA	BLM15BD221SN1D	B	61.0/70.8
EP9008	6910025230	S.BEA	BLM15BD221SN1D	B	56.8/70.8
EP9009	6910025230	S.BEA	BLM15BD221SN1D	B	54.6/70.8
EP9010	6910025230	S.BEA	BLM15BD221SN1D	B	57.5/72.3
EP9011	6910025230	S.BEA	BLM15BD221SN1D	B	58.2/70.8
EP9012	6910025230	S.BEA	BLM15BD221SN1D	B	61.7/72.3
EP9013	6910025230	S.BEA	BLM15BD221SN1D	B	59.6/70.8
EP9014	6910025230	S.BEA	BLM15BD221SN1D	B	60.3/72.3
EP9015	6910025230	S.BEA	BLM15BD221SN1D	B	55.8/67.4
EP9016	6910025230	S.BEA	BLM15BD221SN1D	B	54.9/67.4
EP9017	6910025230	S.BEA	BLM15BD221SN1D	B	53.1/67.4
EP9018	6910025230	S.BEA	BLM15BD221SN1D	B	51.3/67.4
EP9019	6910025230	S.BEA	BLM15BD221SN1D	B	63.1/72.3
EP9020	6910025230	S.BEA	BLM15BD221SN1D	B	54.0/67.4
EP9021	6910025230	S.BEA	BLM15BD221SN1D	B	58.9/72.3
EP9022	6910025230	S.BEA	BLM15BD221SN1D	B	63.8/70.8
EP9051	6910019100	S.BEA	MPZ1608S101AT	B	47.7/71.3
EP9121	6910019100	S.BEA	MPZ1608S101AT	B	47.7/62.1
EP9201	6910012350	S.BEA	MMZ1608Y 102BT	B	156.0/75.2
EP9202	6910012350	S.BEA	MMZ1608Y 102BT	B	158.8/75.2
EP9203	6910012350	S.BEA	MMZ1608Y 102BT	B	144.3/74.5
EP9204	6910012350	S.BEA	MMZ1608Y 102BT	B	147.6/74.5
EP9206	6910014730	S.BEA	MPZ2012S331A-T	B	185.8/76.3
EP9207	6910014730	S.BEA	MPZ2012S331A-T	B	149.9/77.7
EP9208	6910014730	S.BEA	MPZ2012S331A-T	B	153.4/77.7
EP9209	6910014730	S.BEA	MPZ2012S331A-T	B	151.6/77.7
EP9401	6910014730	S.BEA	MPZ2012S331A-T	B	12.1/14.3
EP9402	6910024660	S.BEA	MPZ2012S102AT	B	13.4/16.1
EP9403	6910024660	S.BEA	MPZ2012S102AT	B	13.4/19.3

M.= Mounted side (T: Mounted on the Top side, B: Mounted on the Bottom side)
H/V LOCATION=See the BOARD LAYOUTS for details.

[DIAL UNIT]

REF NO.	PART NO.	DESCRIPTION	M.	H/V LOCATION
J8501	6510029480	S.CON 06FH-SM1-TB (LF) (SN)	T	5.0/2.2
S8501	2250000930	ENC ED09D21MFB14.5A6C102016		

Eqv.= This component is equivalent to the REF No. component listed above, and may be substituted on parts orders and repairs.

M.= Mounted side (T: Mounted on the Top side, B: Mounted on the Bottom side)
H/V LOCATION=See the BOARD LAYOUTS for details.

[VOL UNIT]

REF NO.	PART NO.	DESCRIPTION	M.	H/V LOCATION
J8501	6510029480	S.CON 06FH-SM1-TB (LF) (SN)	T	5.0/2.2
S8501	2250000930	ENC ED09D21MFB14.5A6C102016		

Eqv.= This component is equivalent to the REF No. component listed above, and may be substituted on parts orders and repairs.

M.= Mounted side (T: Mounted on the Top side, B: Mounted on the Bottom side)
H/V LOCATION=See the BOARD LAYOUTS for details.

[MIC UNIT]

REF NO.	PART NO.	DESCRIPTION	M.	H/V LOCATION
D8562	1790001810	S.VAR AVR-M1005C080MTABB	T	10.2/20.8
C8568	4030022140	S.CER GRM033B31H102KA12D	T	16.7/17.0
J8561	6510030290	CON ICOM-CCBPM08MCC		
J8562	6510022621	S.CON 10FMN-BMTTR-A-TBT (LF) (SN)	T	20.9/11.0

Eqv.= This component is equivalent to the REF No. component listed above, and may be substituted on parts orders and repairs.

M.= Mounted side (T: Mounted on the Top side, B: Mounted on the Bottom side)
H/V LOCATION=See the BOARD LAYOUTS for details.

[JACK UNIT]

REF NO.	PART NO.	DESCRIPTION	M.	H/V LOCATION
J8601	6510020711	S.CON 52793-1070	B	32.7/14.3
J8602	6450001630	CON HSJ1406-01-050		

Eqv.= This component is equivalent to the REF No. component listed above, and may be substituted on parts orders and repairs.

M.= Mounted side (T: Mounted on the Top side, B: Mounted on the Bottom side)
H/V LOCATION=See the BOARD LAYOUTS for details.

[DC-DC UNIT]

REF NO.	PART NO.	DESCRIPTION		M.	H/V LOCATION
IC9671	1180003460	S.REG	NJM2831F05-TE1-#ZZZB	T	22.6/64.4
IC9672	1130012160	S.IC	SN74LVC1GU04DCKR	T	23.5/60.5
IC9673	6910026640	S.DC	MP2224GJ-P	T	23.0/57.0
IC9691	1180004960	S.REG	XC6230H001QR-G	T	40.0/56.5
IC9701	1130012160	S.IC	SN74LVC1GU04DCKR	T	27.0/82.0
IC9702	6910026640	S.DC	MP2224GJ-P	T	26.5/78.5
IC9721	6910026640	S.DC	MP2224GJ-P	T	62.0/86.5
IC9751	1180004630	S.REG	NJM7805DL1A-TE1-#FZZB	T	96.0/76.5
L9671	6200016430	S.COI	VLS5045EX-3R3N	T	28.7/56.9
L9701	6200016430	S.COI	VLS5045EX-3R3N	T	32.5/78.5
L9721	6200016400	S.COI	VLS5045EX-6R8M	T	68.0/86.5
R9671	7030015910	S.RES	RMC1/16S-101JTH (100)	T	20.0/62.0
R9673	7030015970	S.RES	RMC1/16S-103JTH (10 k)	T	22.5/66.6
R9675	7030018480	S.RES	RGC1/16SC563DTH (56.0 k)	T	20.0/58.0
R9676	7030017120	S.RES	RGC1/16SC103DTH (10.0 k)	T	20.0/57.1
R9691	7030016560	S.RES	RMC1/16SJPTH	T	43.9/60.9
R9692	7030016910	S.RES	RGC1/16SC393DTH (39 k)	T	44.5/55.0
R9693	7030016880	S.RES	RGC1/16SC223DTH (22.0 k)	T	42.9/60.9
R9701	7030015910	S.RES	RMC1/16S-101JTH (100)	T	23.0/83.0
R9703	7030016290	S.RES	RMC1/16S-222JTH (2.2 k)	T	24.5/81.5
R9704	7030018480	S.RES	RGC1/16SC563DTH (56.0 k)	T	23.0/79.0
R9705	7030016810	S.RES	RGC1/16SC392DTH (3.90 k)	T	23.0/78.0
R9706	7030016810	S.RES	RGC1/16SC392DTH (3.90 k)	T	21.2/78.0
R9722	7030015910	S.RES	RMC1/16S-101JTH (100)	T	62.3/90.0
R9723	7030018480	S.RES	RGC1/16SC563DTH (56.0 k)	T	60.5/89.0
R9724	7030017510	S.RES	RGC1/16SC272DTH (2.7 k)	T	59.5/87.8
R9725	7030017080	S.RES	RGC1/16SC182DTH (1.80 k)	T	58.8/86.5
R9751	7030021110	S.RES	RMC1-5R6JTE (5.6)	T	87.0/73.0
R9752	7030021110	S.RES	RMC1-5R6JTE (5.6)	T	87.0/77.0
C9666	4030019560	S.CER	GRM21BB31C106KE15L	T	21.1/52.9
C9667	4030019560	S.CER	GRM21BB31C106KE15L	T	21.1/51.2
C9668	4030019560	S.CER	GRM21BB31C106KE15L	T	21.1/49.4
C9669	4030019560	S.CER	GRM21BB31C106KE15L	T	23.8/50.3
C9670	4030019560	S.CER	GRM21BB31C106KE15L	T	25.6/50.3
C9671	4030025370	S.CER	GRM033R61C104KE14D	T	22.5/67.4
C9672	4030025230	S.CER	TMK107BJ105KAHT	T	26.0/63.4
C9673	4030025370	S.CER	GRM033R61C104KE14D	T	24.1/62.2
C9675	4030025370	S.CER	GRM033R61C104KE14D	T	21.5/54.2
C9676	4030025370	S.CER	GRM033R61C104KE14D	T	25.0/58.5
C9677	4030025370	S.CER	GRM033R61C104KE14D	T	20.9/55.8
C9678	4030019560	S.CER	GRM21BB31C106KE15L	T	28.5/51.5
C9679	4030019560	S.CER	GRM21BB31C106KE15L	T	30.5/51.5
C9680	4030019560	S.CER	GRM21BB31C106KE15L	T	32.5/51.5
C9681	4030019560	S.CER	GRM21BB31C106KE15L	T	33.5/54.5
C9682	4030019560	S.CER	GRM21BB31C106KE15L	T	33.5/56.5
C9683	4030019560	S.CER	GRM21BB31C106KE15L	T	33.5/58.5
C9684	4030019560	S.CER	GRM21BB31C106KE15L	T	34.5/62.0
C9685	4030019560	S.CER	GRM21BB31C106KE15L	T	32.5/62.0
C9686	4030019560	S.CER	GRM21BB31C106KE15L	T	30.5/62.0
C9687	4030019560	S.CER	GRM21BB31C106KE15L	T	28.5/62.0
C9688	4030022090	S.CER	GRM0332C1H330JA01D	T	20.0/59.0
C9691	4030019560	S.CER	GRM21BB31C106KE15L	T	39.3/52.5
C9692	4030019560	S.CER	GRM21BB31C106KE15L	T	43.3/52.5
C9696	4030019560	S.CER	GRM21BB31C106KE15L	T	24.0/74.7
C9697	4030019560	S.CER	GRM21BB31C106KE15L	T	24.0/72.9
C9698	4030019560	S.CER	GRM21BB31C106KE15L	T	24.0/71.2
C9699	4030019560	S.CER	GRM21BB31C106KE15L	T	26.7/70.5
C9700	4030019560	S.CER	GRM21BB31C106KE15L	T	28.5/70.5
C9701	4030025370	S.CER	GRM033R61C104KE14D	T	29.0/82.7
C9703	4030025370	S.CER	GRM033R61C104KE14D	T	24.5/76.0
C9704	4030025370	S.CER	GRM033R61C104KE14D	T	28.5/80.0
C9705	4030025370	S.CER	GRM033R61C104KE14D	T	24.4/78.7
C9706	4030019560	S.CER	GRM21BB31C106KE15L	T	32.5/73.0
C9707	4030019560	S.CER	GRM21BB31C106KE15L	T	34.5/73.0
C9708	4030019560	S.CER	GRM21BB31C106KE15L	T	36.5/73.0
C9709	4030019560	S.CER	GRM21BB31C106KE15L	T	39.5/80.5
C9710	4030019560	S.CER	GRM21BB31C106KE15L	T	39.5/78.5
C9711	4030019560	S.CER	GRM21BB31C106KE15L	T	39.5/76.5
C9712	4030019560	S.CER	GRM21BB31C106KE15L	T	38.5/84.0
C9713	4030019560	S.CER	GRM21BB31C106KE15L	T	36.5/84.0
C9714	4030019560	S.CER	GRM21BB31C106KE15L	T	34.5/84.0
C9715	4030019560	S.CER	GRM21BB31C106KE15L	T	32.5/84.0
C9716	4030022090	S.CER	GRM0332C1H330JA01D	T	23.0/80.0
C9717	4030019560	S.CER	GRM21BB31C106KE15L	T	59.3/82.9
C9718	4030019560	S.CER	GRM21BB31C106KE15L	T	59.3/81.2
C9719	4030019560	S.CER	GRM21BB31C106KE15L	T	59.3/79.4
C9720	4030019560	S.CER	GRM21BB31C106KE15L	T	63.5/79.3
C9721	4030019560	S.CER	GRM21BB31C106KE15L	T	61.7/79.3
C9722	4030025370	S.CER	GRM033R61C104KE14D	T	60.0/84.6
C9723	4030025370	S.CER	GRM033R61C104KE14D	T	64.5/87.7
C9724	4030025370	S.CER	GRM033R61C104KE14D	T	59.6/86.0
C9725	4030019560	S.CER	GRM21BB31C106KE15L	T	68.5/81.8
C9726	4030019560	S.CER	GRM21BB31C106KE15L	T	70.5/81.8
C9727	4030019560	S.CER	GRM21BB31C106KE15L	T	72.5/81.8
C9728	4030019560	S.CER	GRM21BB31C106KE15L	T	69.0/92.0
C9729	4030019560	S.CER	GRM21BB31C106KE15L	T	73.5/87.4
C9730	4030019560	S.CER	GRM21BB31C106KE15L	T	73.5/89.4
C9731	4030019560	S.CER	GRM21BB31C106KE15L	T	73.1/92.0
C9732	4030019560	S.CER	GRM21BB31C106KE15L	T	71.0/92.0
C9733	4030019560	S.CER	GRM21BB31C106KE15L	T	73.5/84.5
C9734	4030019560	S.CER	GRM21BB31C106KE15L	T	67.0/92.0
C9735	4030022090	S.CER	GRM0332C1H330JA01D	T	60.5/90.0
C9751	4030019560	S.CER	GRM21BB31C106KE15L	T	89.9/68.5
C9753	4510009910	S.ELE	16 CE 10 LH	T	98.2/68.0
C9781	4030025370	S.CER	GRM033R61C104KE14D	T	74.0/52.0
C9782	4030025370	S.CER	GRM033R61C104KE14D	T	81.0/39.0
C9783	4030025370	S.CER	GRM033R61C104KE14D	T	84.3/52.0
C9784	4030025370	S.CER	GRM033R61C104KE14D	T	86.5/38.4
C9785	4030025370	S.CER	GRM033R61C104KE14D	T	93.0/51.1

Eqv.= This component is equivalent to the REF No. component listed above, and may be substituted on parts orders and repairs.

[DC-DC UNIT]

REF NO.	PART NO.	DESCRIPTION		M.	H/V LOCATION
C9786	4030025370	S.CER	GRM033R61C104KE14D	T	77.0/54.2
C9787	4030025370	S.CER	GRM033R61C104KE14D	T	93.3/54.2
J9781	6510022601	S.CON	30FMN-BMTTR-A-TBT (LF) (SN)	T	87.5/45.0
EP9671	6910018930	S.BEA	MPZ2012S601A	T	36.5/51.6
EP9701	6910018930	S.BEA	MPZ2012S601A	T	30.5/70.5
EP9721	6910018930	S.BEA	MPZ2012S601A	T	65.2/79.3
EP9722	6910018930	S.BEA	MPZ2012S601A	T	71.6/71.4
EP9781	6910018930	S.BEA	MPZ2012S601A	T	74.0/49.5
EP9782	6910023820	S.BEA	MPZ2012S101A-T	T	82.0/40.5
EP9783	6910019900	S.BEA	MPZ1608S601AT	T	85.0/39.5
EP9785	6910019900	S.BEA	MPZ1608S601AT	T	92.5/52.9
EP9787	6910023820	S.BEA	MPZ2012S101A-T	T	85.0/50.5
EP9788	6910023820	S.BEA	MPZ2012S101A-T	T	77.0/49.5
EP9884	6910019900	S.BEA	MPZ1608S601AT	T	92.0/50.0

M.= Mounted side (T: Mounted on the Top side, B: Mounted on the Bottom side)
H/V LOCATION=See the BOARD LAYOUTS for details.

SECTION 7 MECHANICAL PARTS

[CHASSIS UNIT]

REF NO.	PART NO.	DESCRIPTION	QTY.
J3001	6510028411	MR-DS-01-2	1
J3003	6510028411	MR-DS-01-2	1
MF3001	2710001060	FD128025HB-N (2N7R1)	1
W3001	8900011050	OPC-1109	1
W3002	8920003240	CAB-1390	1
W3003	8970024742	1.5D COAXIAL 65MM-2 C31/W17D PHL	1
W3006	8900009031	OPC-902A (P1N30L130)	1
W3007	8900015920	OPC-1142A (P1N16L110)	1
W3008	8970024752	1.5D COAXIAL 330MM-2 C31/W17D PHL	1
W3010	8900018134	OPC-1303B-4	1
W3011	8900009031	OPC-902A (P1N30L130)	1
W3012	8900009031	OPC-902A (P1N30L130)	1
W3020	8970024232	1.5D COAXIAL 390MM-2 (F/I) C31/C31	1
W3022	8920003300	CAB-1395	1
W3023	8970024083	1.5D COAXIAL 180MM-3 C31/C31	1
W3025	8970024442	1.5D COAXIAL 510MM-2 (B) C31/C31	1
EP3001	6950000710	USBC-3	1
MP3001	8010018824	2429 CHASSIS-4	1
MP3002	8110007703	2429 T-COVER-3	1
MP3003	8110011720	4100 B-COVER ZAM	1
MP3004	8110011730	4100 PA COVER ZAM	1
MP3005	8930057191	2429 EARTH PLATE-1	2
MP3006	8930057980	RUBBER REG (N) SJ-5023K	4
MP3007	8930102230	4100 D-SUB PLATE	1
MP3009	8820000530	FLANGE BOLT M4 × 8 NI	1
MP3011	8810010670	SET SCREW H M4 × 30 ZC3	2
MP3012	8810008661	PH BT M3 × 8 NI-ZC3	38
MP3013	8810005771	BIND M3 × 8 ZK3 BLACK	14
MP3014	8810009991	PH BT M3 × 8 NI-ZK3	4
MP3016	8930058100	2429 DC PLATE	1
MP3025	8810007231	SET SCREW H M3 × 8 ZC3	8
MP3026	8810007231	SET SCREW H M3 × 8 ZC3	2
MP3027	8810007231	SET SCREW H M3 × 8 ZC3	1
MP3028	8810007231	SET SCREW H M3 × 8 ZC3	2
MP3029	8930102460	4100 IC CLIP	1
MP3030	8930070510	THERMAL SHEET (BF) TC-600HS-1.4	2

[MAIN UNIT]

REF NO.	PART NO.	DESCRIPTION	QTY.
J4141*	6510023671	TCS4480-0141577	1
J4161*	6450002470	JY-3510A	1
J4401*	6510028210	SJ050010 (TMP-J01X-V6)	1
J4421*	6510028210	SJ050010 (TMP-J01X-V6)	1
J4701*	6510028210	SJ050010 (TMP-J01X-V6)	1
J5071*	6510026540	UBB-4R-D14T-4D (LF) (SN)	1
J5081*	6510021861	BH-800.4GG	1
BT5081	3020000110	CR-2032L/BK	1
MP4201*	8510019710	3182 PLL CASE	1
MP4381*	8510019800	3183 FILTER CASE	1
MP5181*	8510021830	3765 S-CASE	1
MP5241*	8510021830	3765 S-CASE	1
MP5282*	8510021830	3765 S-CASE	1
MP5421*	8510019800	3183 FILTER CASE	1

[CONNECT UNIT]

REF NO.	PART NO.	DESCRIPTION	QTY.
J7711*	6510023120	CD6109SA1J0	1
J7721*	6510023120	CD6109SA1J0	1
J7751*	6450002650	BNC-6252H7	1
MP7701	8930077910	2590 M2-SPRING	1

[PA UNIT]

REF NO.	PART NO.	DESCRIPTION	QTY.
J6101*	6510028210	SJ050010 (TMP-J01X-V6)	1
J6401*	6510028210	SJ050010 (TMP-J01X-V6)	1
F6701*	5220000440	FHA040-01	1
F6702	5210001430	11930011 (BFLP 5A 58V)	1
EP6327*	6910018760	GLASS D=1.0 L=15MM	2
EP6602*	6510018330	F4053A	1
EP6603*	6510018330	F4053A	1
MP6401	8860001640	4100 RUG	1
MP6402	8860001640	4100 RUG	1
MP6403	8860001640	4100 RUG	1
MP6404	8860001640	4100 RUG	1

[FILTER UNIT]

REF NO.	PART NO.	DESCRIPTION	QTY.
J7001*	6510028210	SJ050010 (TMP-J01X-V6)	1
J7311*	6510028210	SJ050010 (TMP-J01X-V6)	1
J7321*	6510028210	SJ050010 (TMP-J01X-V6)	1

[FRONT UNIT]

REF NO.	PART NO.	DESCRIPTION	QTY.
SP8001	2510002060	057D0401	1
W8002	8910000070	FFC-1008 (P0.5N6L50)	1
W8003	8910000070	FFC-1008 (P0.5N6L50)	1
W8004	8900018000	OPC-1344A (P1N10L70)	1
W8005	8900015120	OPC-942B (P1N10L170)	1
W8006	8920003260	CAB-1380	1
W8007	8920001660	CAB-1174	1
MP8001	8210034770	3715 FRONT PANEL (D) ASSEMBLY-1	1
MP8003	8930092130	3715 LCD HOLDER	1
MP8004	8610015670	KNOB N-430 ASSEMBLY	1
MP8007	8610015630	KNOB N-429	1
MP8008	8930091880	3715 B-KEY (SC)	1
MP8009	8930091890	3715 F-PACKING (ORION)	1
MP8010	8930092250	3715 LCD SPONGE	1
MP8012	8510021570	3715 SHIELD CASE	1
MP8013	8930092350	3715 SP HOLDER	1
MP8014	8310084000	3570 D-COVER	1
MP8015	8930088990	3570 SHAFT	1
MP8016	8930089100	3570 SPRING	1
MP8017	8930069020	O-RING (BG)	2
MP8018	8810008661	PH BT M3×8 NI-ZC3	11
MP8019	8810008661	PH BT M3×8 NI-ZC3	4
MP8022	8930058780	2577 SHEET	1
MP8024	8820001180	2417 SCREW 2.6×16	8
MP8025	8930053730	O-RING (AI) (KSK)	8
MP8026	8930082360	3340 JACK CAP	1
MP8027	8930082490	O-RING (CH) (TOP)	1
MP8028	8510021640	3726 CASE ASSEMBLY	1
MP8029	8930092550	3715 A-KEY (A) (SC)	1
MP8030	8930057950	DOUBLE SIDE TAPE (AH)	1
MP8031	8810008661	PH BT M3×8 NI-ZC3	2

[LOGIC UNIT]

REF NO.	PART NO.	DESCRIPTION	QTY.
DS9001	5030004580	RFE430V-AZH-DNN-000	1

*: Refer to “BOARD LAYOUTS” for the location.

Screw abbreviations A, B0, BT: Self-tapping PH: Pan head BS: Brass NI: Nickel ZU: Zinc SUS: Stainless

[DIAL UNIT]

REF NO.	PART NO.	DESCRIPTION	QTY.
S8501	2250000930	ED09D21MFB14.5A6C102016	1

[VOL UNIT]

REF NO.	PART NO.	DESCRIPTION	QTY.
S8501	2250000930	ED09D21MFB14.5A6C102016	1

[MIC UNIT]

REF NO.	PART NO.	DESCRIPTION	QTY.
J8561	6510030290	ICOM-CCBPM08MCC	1

[JACK UNIT]

REF NO.	PART NO.	DESCRIPTION	QTY.
J8602	6450001630	HSJ1406-01-050	1

[DC-DC UNIT]

REF NO.	PART NO.	DESCRIPTION	QTY.
MP9671†	8510019780	3183 A-MAIN CASE	1

[SUPPLIED ACCESSORIES]

REF NO.	PART NO.	DESCRIPTION	QTY.
J1001	6510002030	1380TL	4
J1002	6450001281	TCP0587-715467	1
P1001	6510001930	1490P1	1
F1001	5210000841	ATC 30-1	2
F1002	5210001430	11930011 (BFLP 5A 58V)	1
MC1001	–	HM-214H	1
W1001	8900022470	OPC-2406	1
W1002	8920003250	CAB-1391	1
EP1001	0800016040	AA.162.501111.IB	1
MP1001	8010018981	2429 BRACKET-1	1
MP1002	8810001490	PH A M5×20 SUS	4
MP1003	8850000500	S-WASHER M5 SUS	4
MP1004	8850000180	FLAT WASHER M5 SUS	4
MP1005	8810009300	SET SCREW (J)	4
MP1006	8950007250	3054 MIC HANGER	1
MP1007	8810004700	PH A M3×16 SUS	2
MP1008	8010023430	3715 MOBILE BRACKET	1
MP1009	8810001490	PH A M5×20 SUS	5
MP1010	8850000500	S-WASHER M5 SUS	5
MP1011	8850000180	FLAT WASHER M5 SUS	5
MP1012	8820001460	3054 KNOB BOLT	2

† Sold as an option.

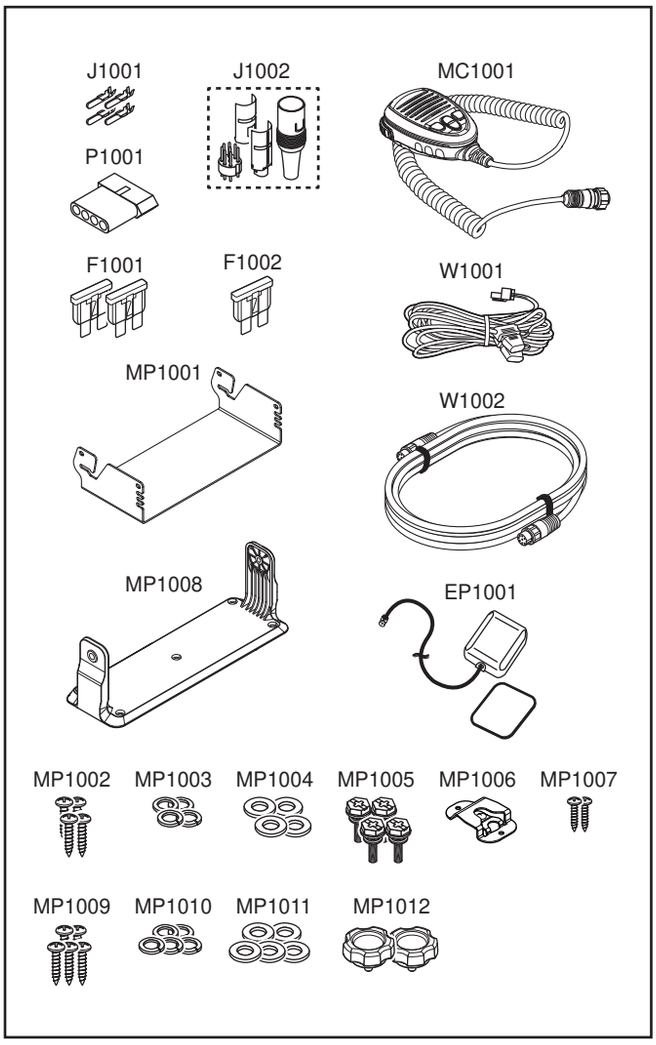

*: Refer to “BOARD LAYOUTS” for the location.

Screw abbreviations A, B0, BT: Self-tapping PH: Pan head BS: Brass NI: Nickel ZU: Zinc SUS: Stainless

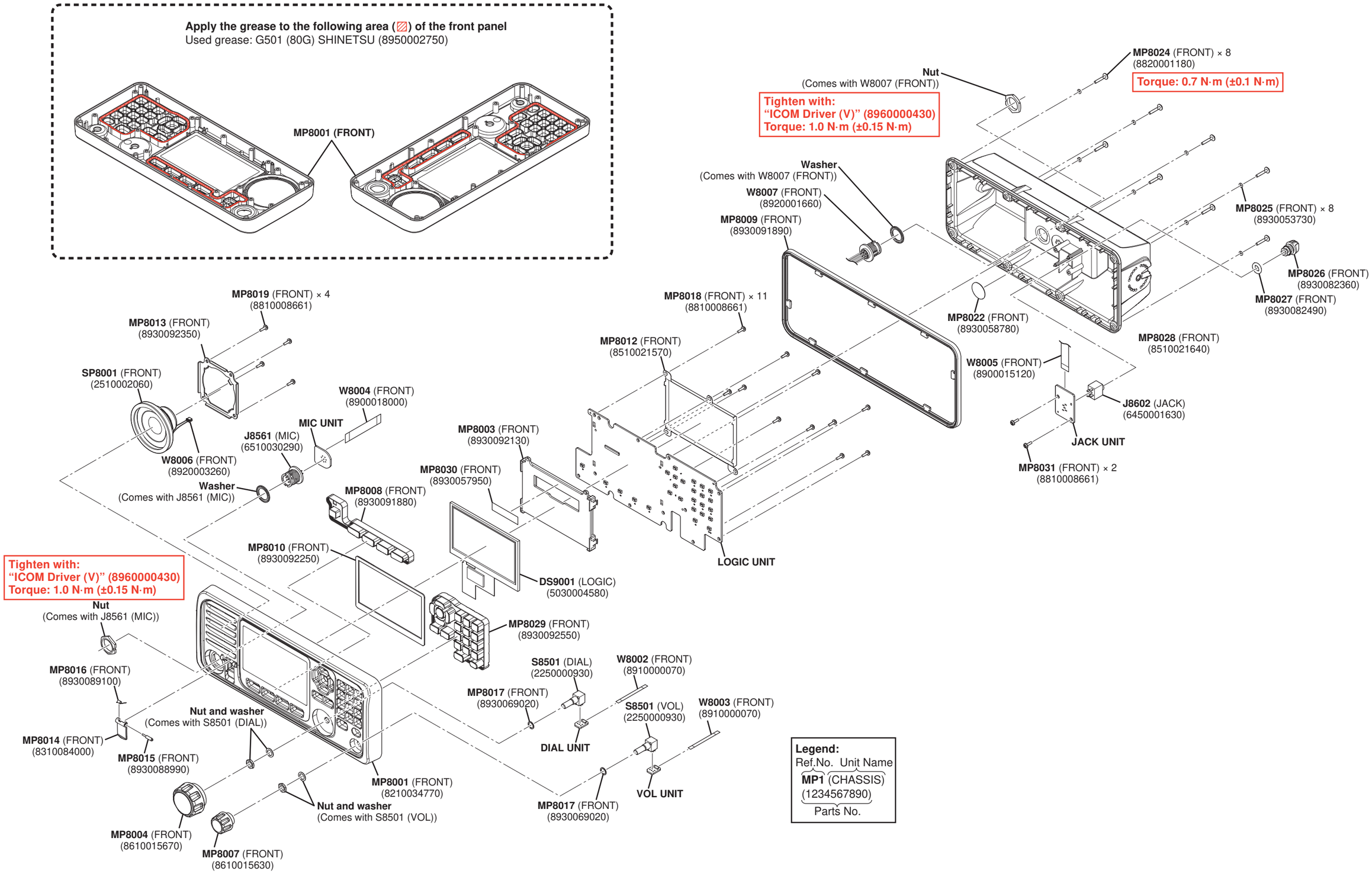
Apply the grease to the following area (▨) of the front panel
Used grease: G501 (80G) SHINETSU (8950002750)
MP8001 (FRONT)
MP8024 (FRONT) × 8
(8820001180)
Torque: 0.7 N·m (±0.1 N·m)
Nut
(Comes with W8007 (FRONT))
Tighten with:
"ICOM Driver (V)" (8960000430)
Torque: 1.0 N·m (±0.15 N·m)
Washer
(Comes with W8007 (FRONT))
W8007 (FRONT)
(8920001660)
MP8009 (FRONT)
(8930091890)
MP8025 (FRONT) × 8
(8930053730)
MP8026 (FRONT)
(8930082360)
MP8027 (FRONT)
(8930082490)
MP8022 (FRONT)
(8930058780)
MP8028 (FRONT)
(8510021640)
MP8018 (FRONT) × 11
(8810008661)
MP8012 (FRONT)
(8510021570)
W8005 (FRONT)
(8900015120)
J8602 (JACK)
(6450001630)
JACK UNIT
MP8031 (FRONT) × 2
(8810008661)
MP8019 (FRONT) × 4
(8810008661)
MP8013 (FRONT)
(8930092350)
SP8001 (FRONT)
(2510002060)
W8004 (FRONT)
(8900018000)
MIC UNIT
J8561 (MIC)
(6510030290)
W8006 (FRONT)
(8920003260)
Washer
(Comes with J8561 (MIC))
MP8003 (FRONT)
(8930092130)
MP8030 (FRONT)
(8930057950)
MP8008 (FRONT)
(8930091880)
MP8010 (FRONT)
(8930092250)
LOGIC UNIT
DS9001 (LOGIC)
(5030004580)
Tighten with:
"ICOM Driver (V)" (8960000430)
Torque: 1.0 N·m (±0.15 N·m)
Nut
(Comes with J8561 (MIC))
MP8029 (FRONT)
(8930092550)
MP8016 (FRONT)
(8930089100)
S8501 (DIAL)
(2250000930)
W8002 (FRONT)
(8910000070)
MP8017 (FRONT)
(8930069020)
Nut and washer
(Comes with S8501 (DIAL))
S8501 (VOL)
(2250000930)
W8003 (FRONT)
(8910000070)
MP8014 (FRONT)
(8310084000)
MP8015 (FRONT)
(8930088990)
DIAL UNIT
MP8001 (FRONT)
(8210034770)
VOL UNIT
Nut and washer
(Comes with S8501 (VOL))
MP8017 (FRONT)
(8930069020)
MP8004 (FRONT)
(8610015670)
MP8007 (FRONT)
(8610015630)
Legend:
Ref.No. Unit Name
MP1 (CHASSIS)
(1234567890)
Parts No.

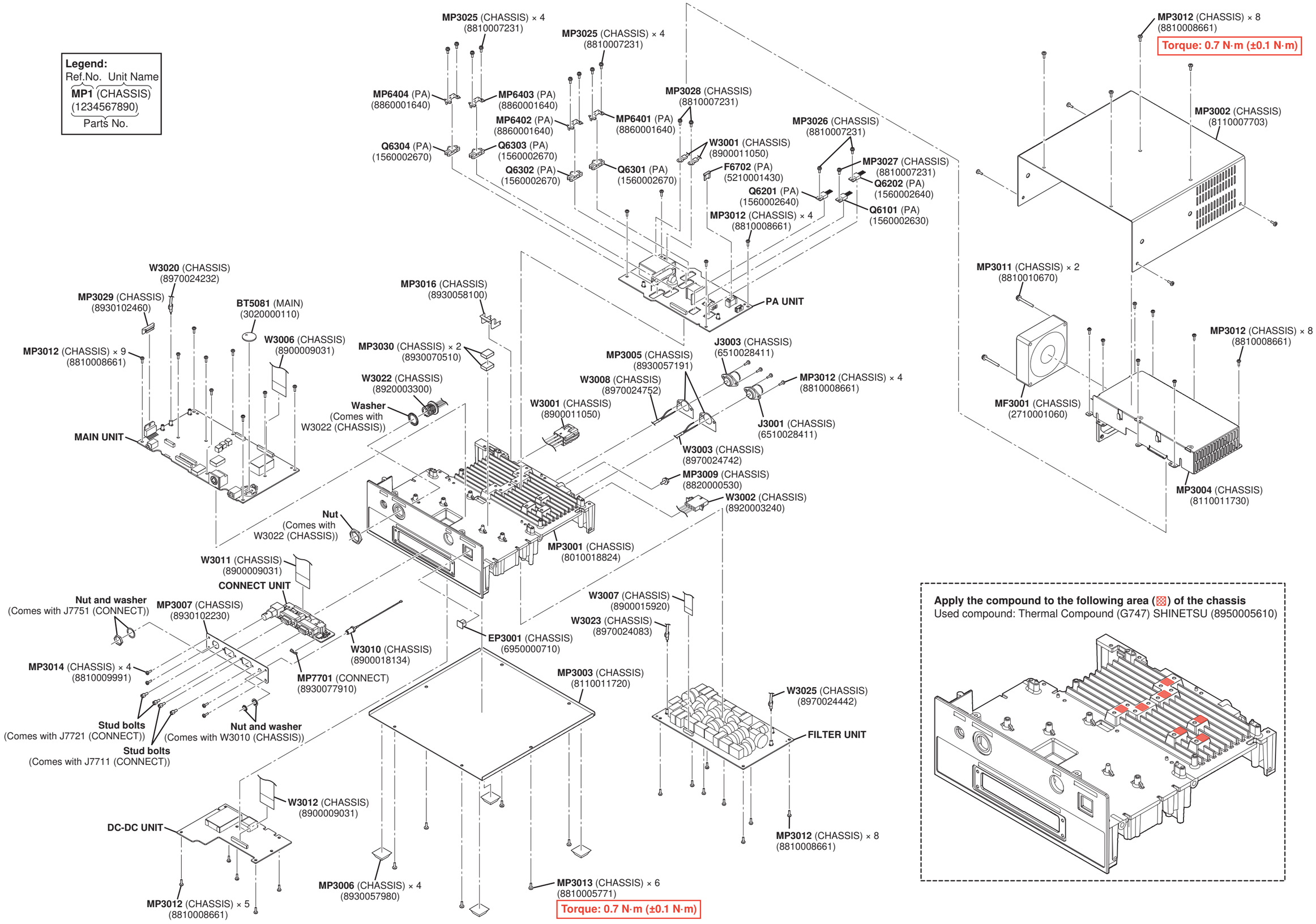
Legend:
Ref.No. Unit Name
MP1 (CHASSIS)
(1234567890)
Parts No.
MP3025 (CHASSIS) × 4 (8810007231)
MP3025 (CHASSIS) × 4 (8810007231)
MP6404 (PA) (8860001640)
MP6403 (PA) (8860001640)
MP6402 (PA) (8860001640)
MP6401 (PA) (8860001640)
MP3028 (CHASSIS) (8810007231)
MP3026 (CHASSIS) (8810007231)
Q6304 (PA) (1560002670)
Q6303 (PA) (1560002670)
Q6302 (PA) (1560002670)
Q6301 (PA) (1560002670)
W3001 (CHASSIS) (8900011050)
F6702 (PA) (5210001430)
MP3027 (CHASSIS) (8810007231)
Q6202 (PA) (1560002640)
Q6201 (PA) (1560002640)
Q6101 (PA) (1560002630)
MP3012 (CHASSIS) × 4 (8810008661)
PA UNIT
MP3012 (CHASSIS) × 8 (8810008661)
Torque: 0.7 N·m (±0.1 N·m)
MP3002 (CHASSIS) (8110007703)
MP3011 (CHASSIS) × 2 (8810010670)
MP3012 (CHASSIS) × 8 (8810008661)
MF3001 (CHASSIS) (2710001060)
MP3004 (CHASSIS) (8110011730)
W3020 (CHASSIS) (8970024232)
MP3029 (CHASSIS) (8930102460)
BT5081 (MAIN) (3020000110)
W3006 (CHASSIS) (8900009031)
MP3012 (CHASSIS) × 9 (8810008661)
MAIN UNIT
MP3016 (CHASSIS) (8930058100)
MP3030 (CHASSIS) × 2 (8930070510)
W3022 (CHASSIS) (8920003300)
Washer (Comes with W3022 (CHASSIS))
W3001 (CHASSIS) (8900011050)
MP3005 (CHASSIS) (8930057191)
W3008 (CHASSIS) (8970024752)
J3003 (CHASSIS) (6510028411)
MP3012 (CHASSIS) × 4 (8810008661)
J3001 (CHASSIS) (6510028411)
W3003 (CHASSIS) (8970024742)
MP3009 (CHASSIS) (8820000530)
W3002 (CHASSIS) (8920003240)
Nut (Comes with W3022 (CHASSIS))
MP3001 (CHASSIS) (8010018824)
W3011 (CHASSIS) (8900009031)
CONNECT UNIT
Nut and washer (Comes with J7751 (CONNECT))
MP3007 (CHASSIS) (8930102230)
W3010 (CHASSIS) (8900018134)
MP3014 (CHASSIS) × 4 (8810009991)
MP7701 (CONNECT) (8930077910)
Stud bolts (Comes with J7721 (CONNECT))
Nut and washer (Comes with W3010 (CHASSIS))
Stud bolts (Comes with J7711 (CONNECT))
W3007 (CHASSIS) (8900015920)
W3023 (CHASSIS) (8970024083)
EP3001 (CHASSIS) (6950000710)
MP3003 (CHASSIS) (8110011720)
W3025 (CHASSIS) (8970024442)
FILTER UNIT
MP3012 (CHASSIS) × 8 (8810008661)
W3012 (CHASSIS) (8900009031)
DC-DC UNIT
MP3012 (CHASSIS) × 5 (8810008661)
MP3006 (CHASSIS) × 4 (8930057980)
MP3013 (CHASSIS) × 6 (8810005771)
Torque: 0.7 N·m (±0.1 N·m)
Apply the compound to the following area (▩) of the chassis
Used compound: Thermal Compound (G747) SHINETSU (8950005610)

The actual configuration of the PC board can be seen by viewing the top and bottom BOARD LAYOUT pages together.

• **LOGIC UNIT (B-9011B: TOP VIEW)**

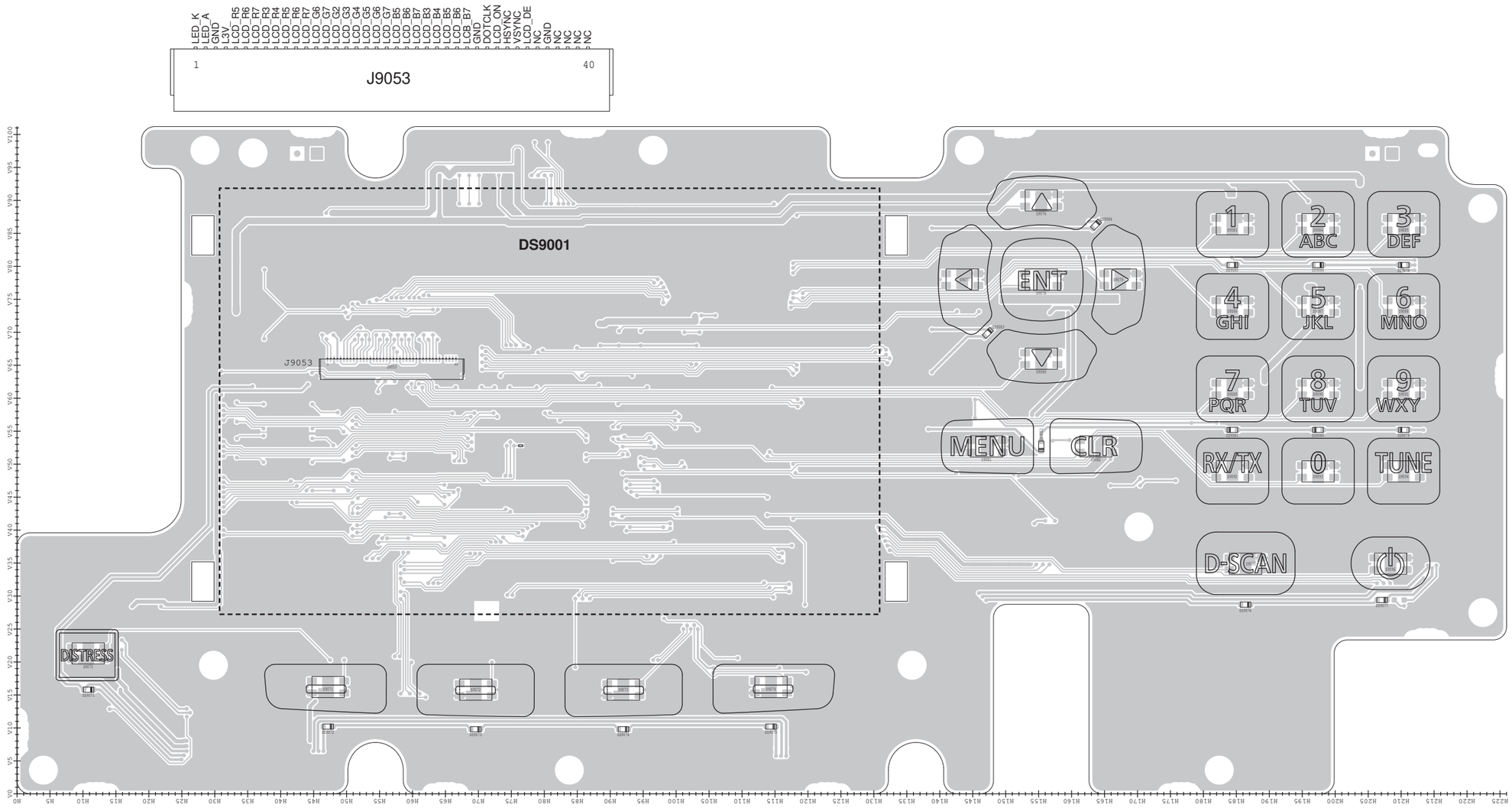

See the PARTS LIST H/V location on the PARTS LIST for location details.

The actual configuration of the PC board can be seen by viewing the top and bottom BOARD LAYOUT pages together.

• **LOGIC UNIT (B-9011B: BOTTOM VIEW)**

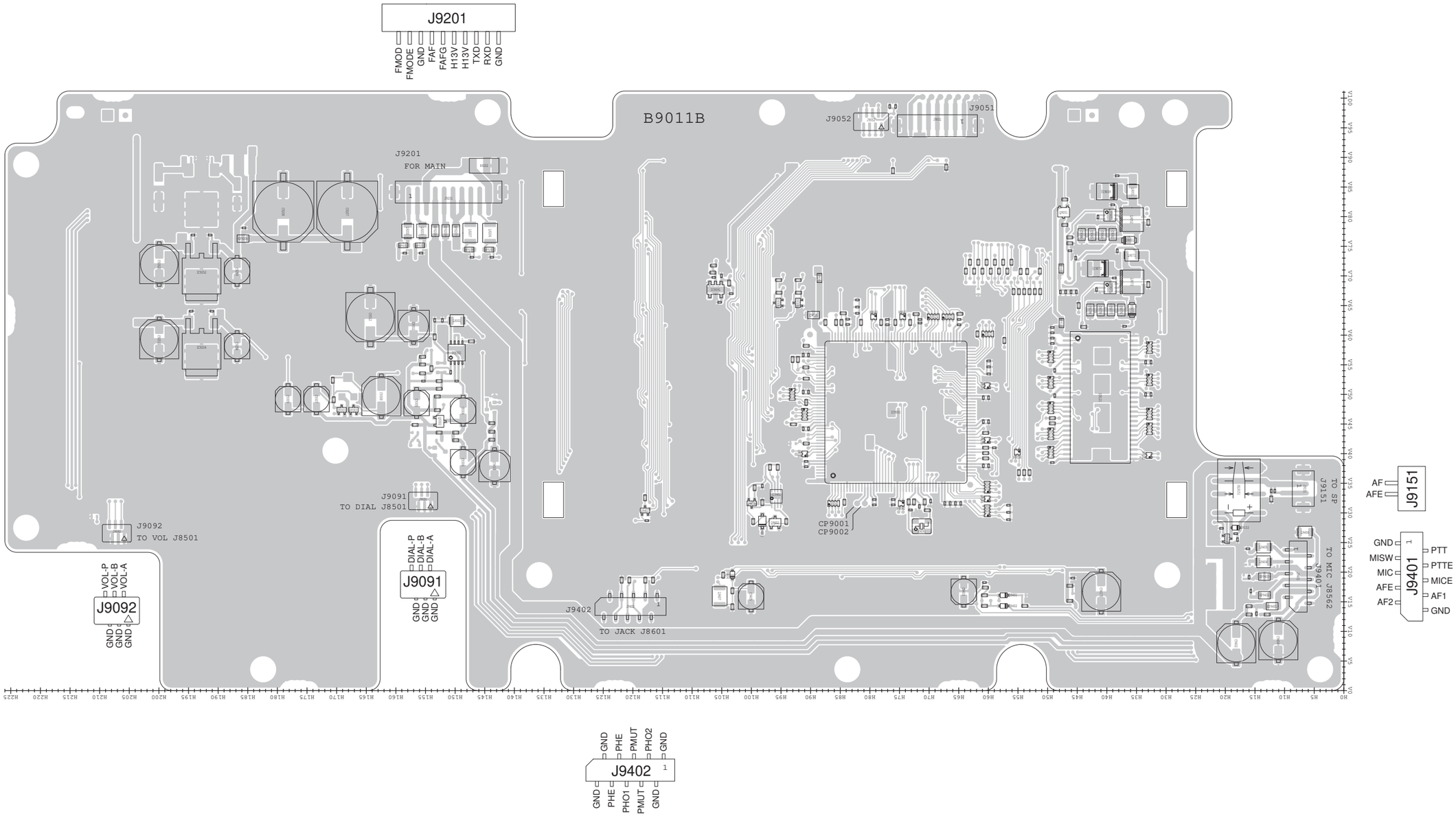

See the PARTS LIST H/V location on the PARTS LIST for location details.

The actual configuration of the PC board can be seen by viewing the top and bottom BOARD LAYOUT pages together.

• **DIAL/VOL UNIT (B-9012: TOP VIEW)**

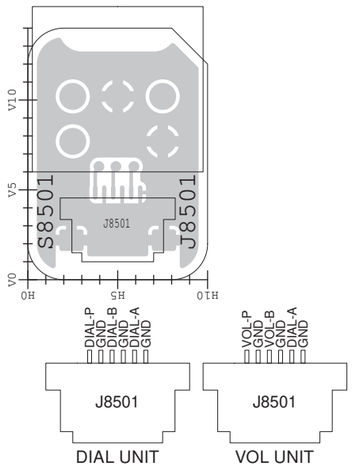

• **DIAL/VOL UNIT (B-9012: BOTTOM VIEW)**

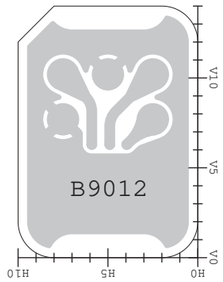

• **MIC UNIT (B-9014B: TOP VIEW)**

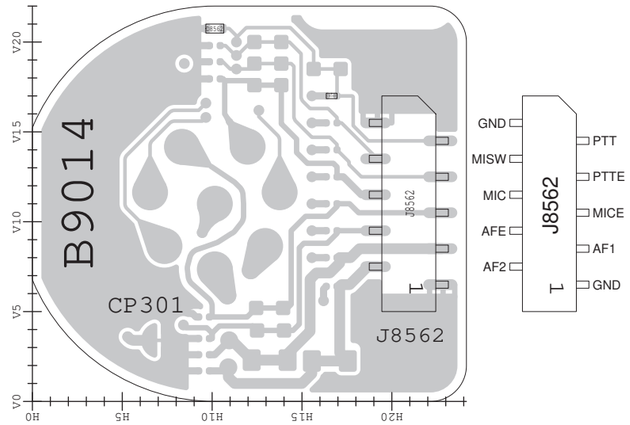

• **MIC UNIT (B-9014B: BOTTOM VIEW)**

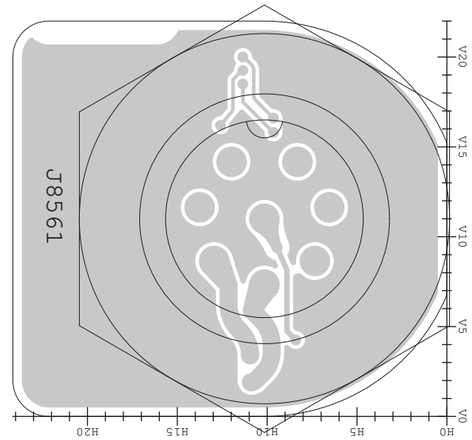

• **JACK UNIT (B-8286B: TOP VIEW)**

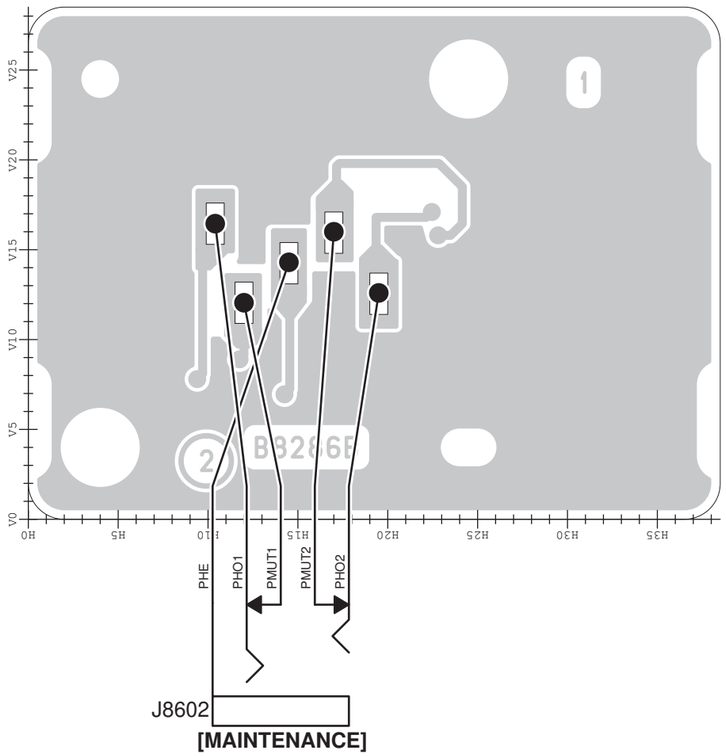

• **JACK UNIT (B-8286B: BOTTOM VIEW)**

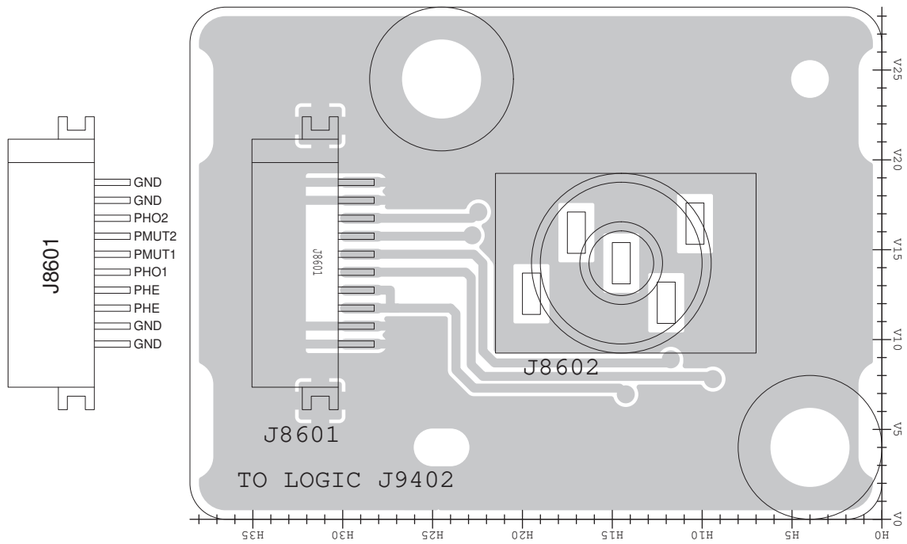

See the PARTS LIST H/V location on the PARTS LIST for location details.

The actual configuration of the PC board can be seen by viewing the top and bottom BOARD LAYOUT pages together.

• **CONNECT UNIT (B-9008C: TOP VIEW)**

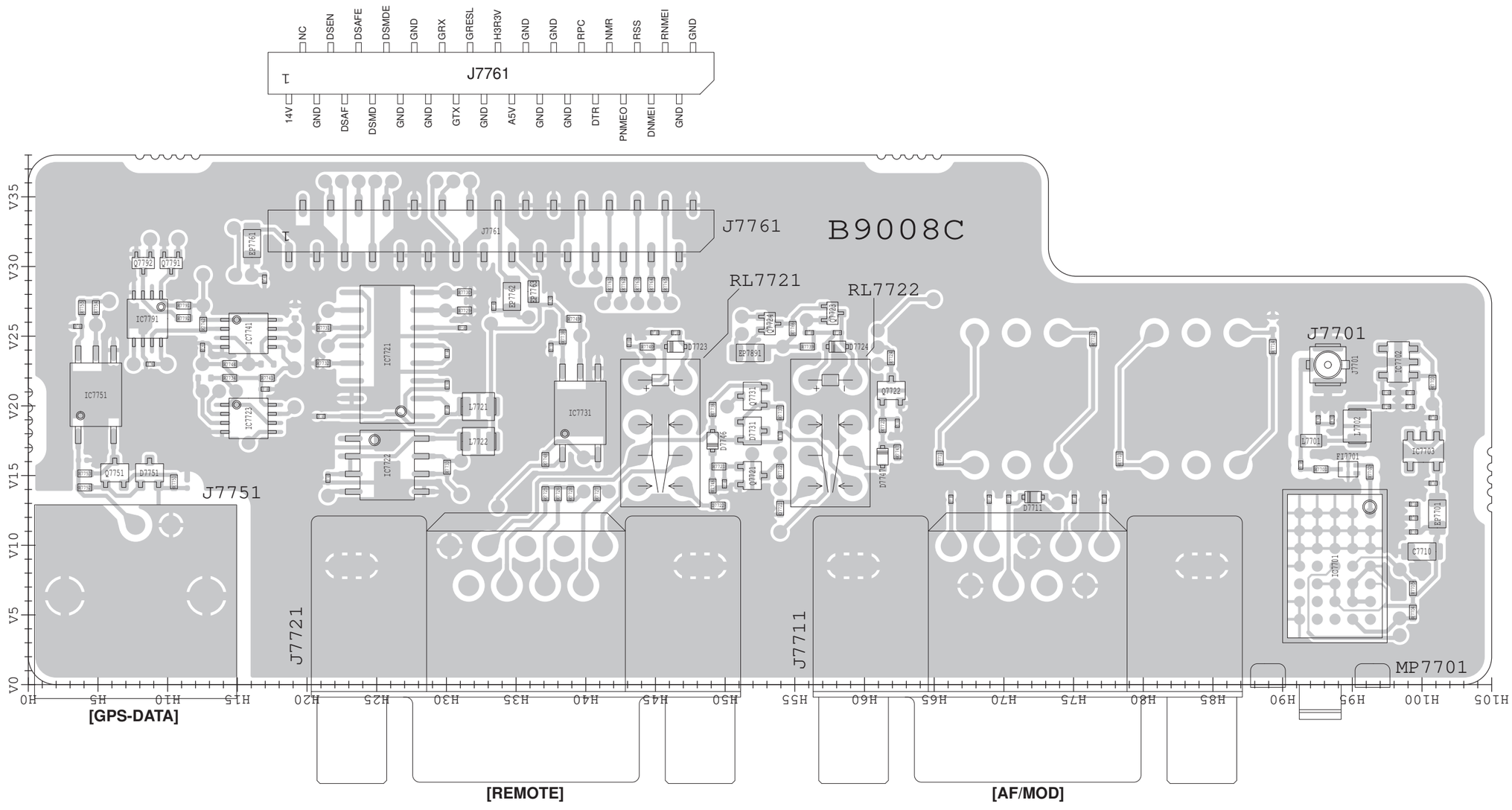

See the PARTS LIST H/V location on the PARTS LIST for location details.

The actual configuration of the PC board can be seen by viewing the top and bottom BOARD LAYOUT pages together.

• **CONNECT UNIT (B-9008C: BOTTOM VIEW)**

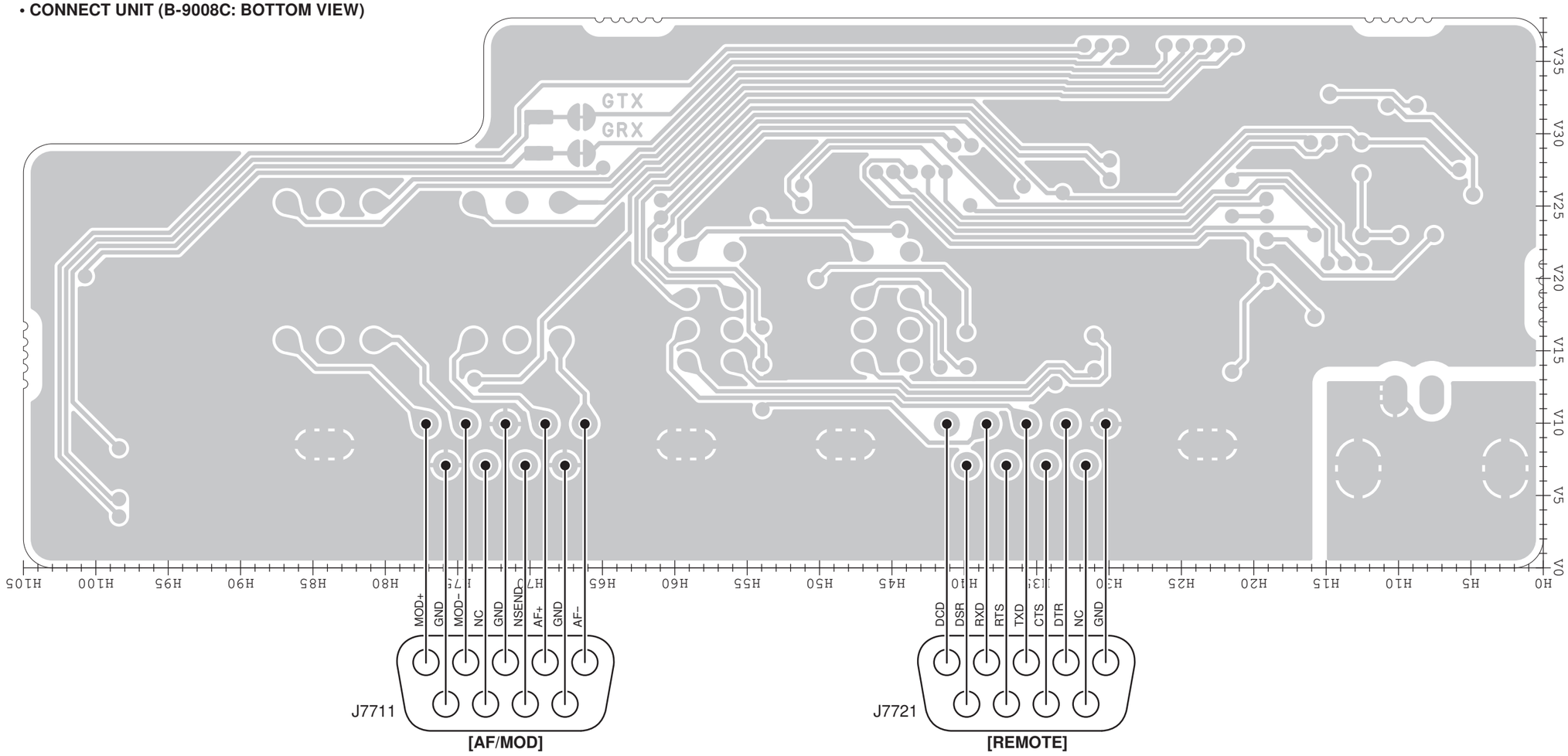

See the PARTS LIST H/V location on the PARTS LIST for location details.

The actual configuration of the PC board can be seen by viewing the top and bottom BOARD LAYOUT pages together.

• **MAIN UNIT (B-9007B: TOP VIEW)**

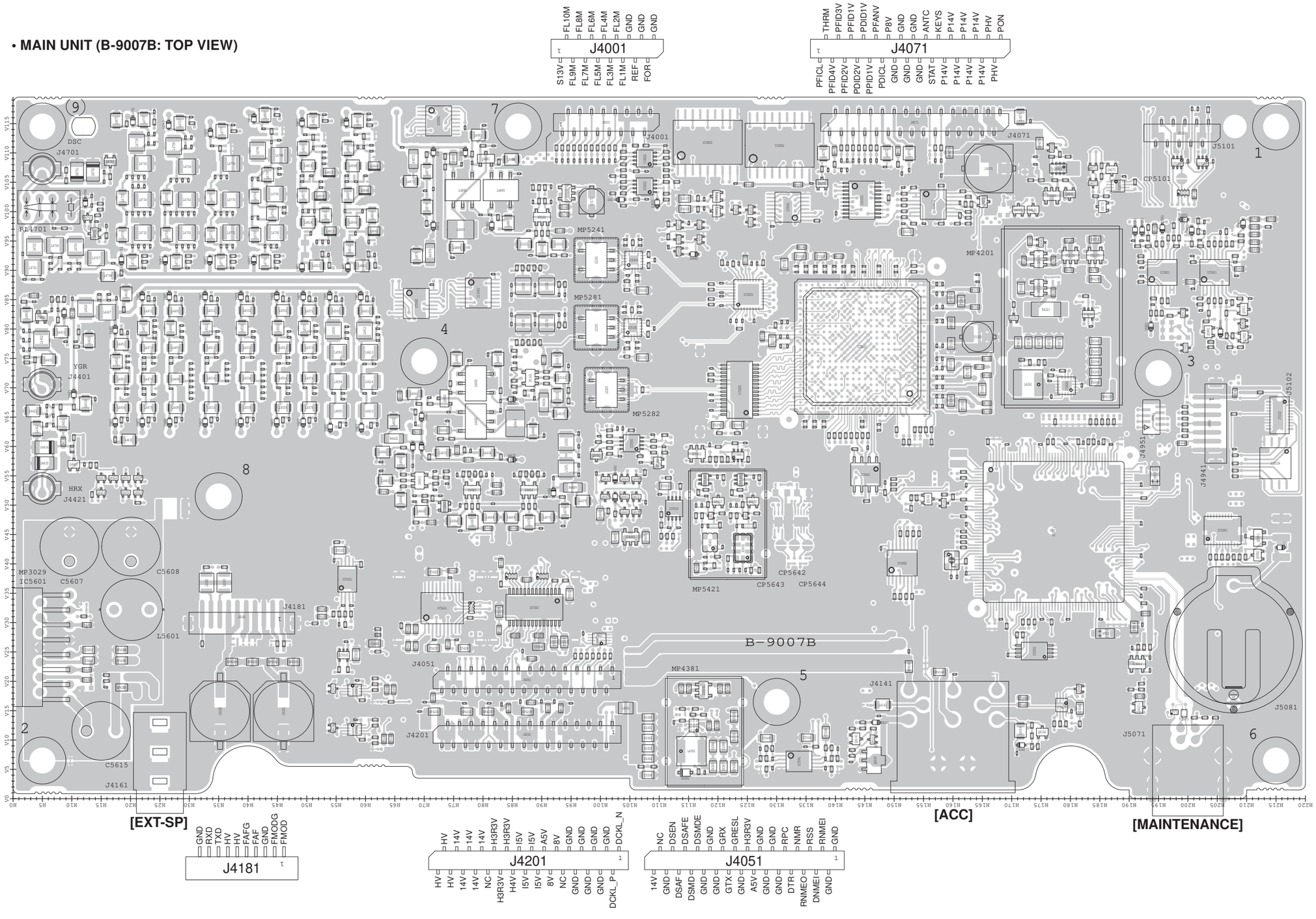

See the PARTS LIST H/V location on the PARTS LIST for location details.

The actual configuration of the PC board can be seen by viewing the top and bottom BOARD LAYOUT pages together.

• **MAIN UNIT (B-9007B: BOTTOM VIEW)**

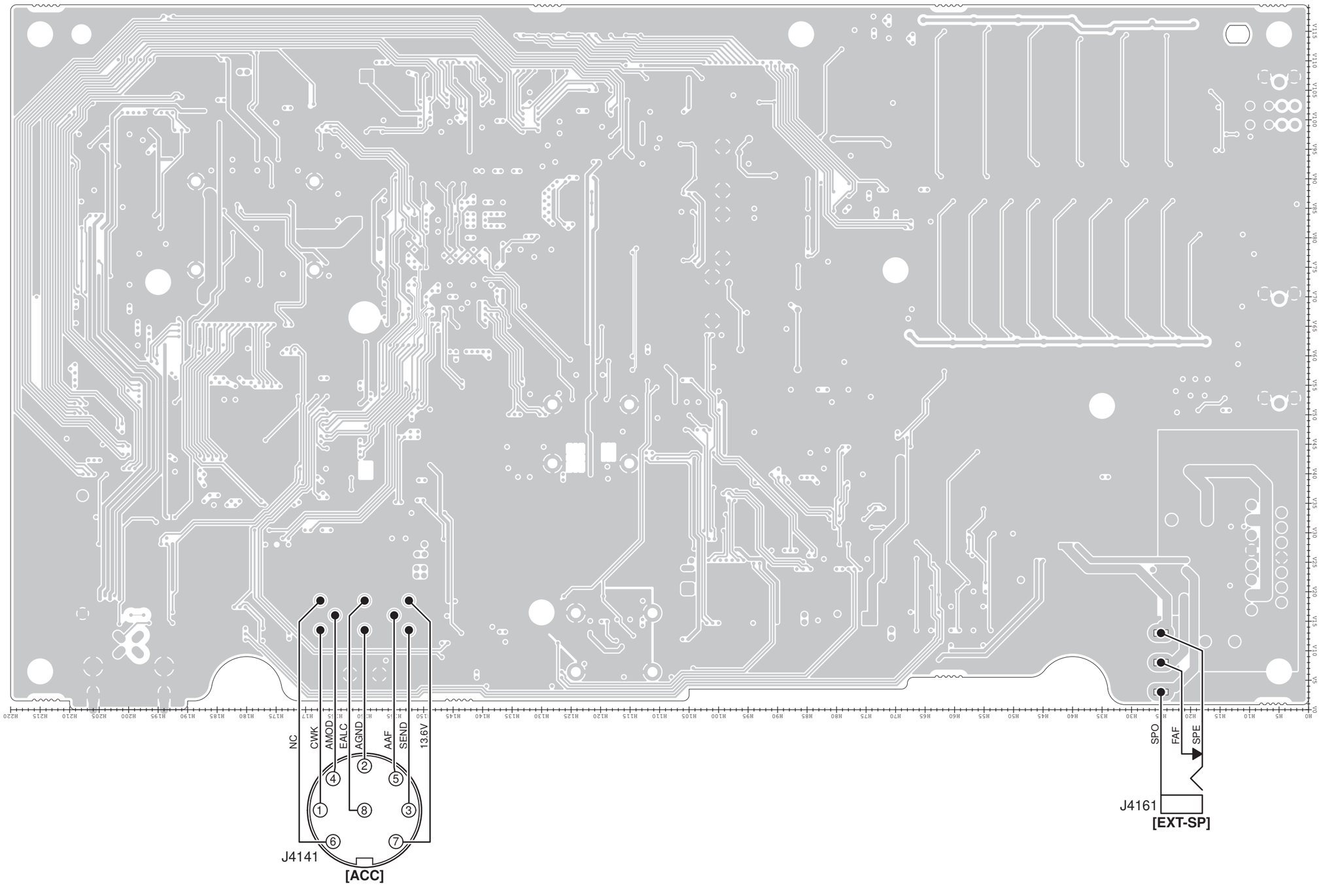

See the PARTS LIST H/V location on the PARTS LIST for location details.

The actual configuration of the PC board can be seen by viewing the top and bottom BOARD LAYOUT pages together.

• **PA UNIT (B-9009B: TOP VIEW)**

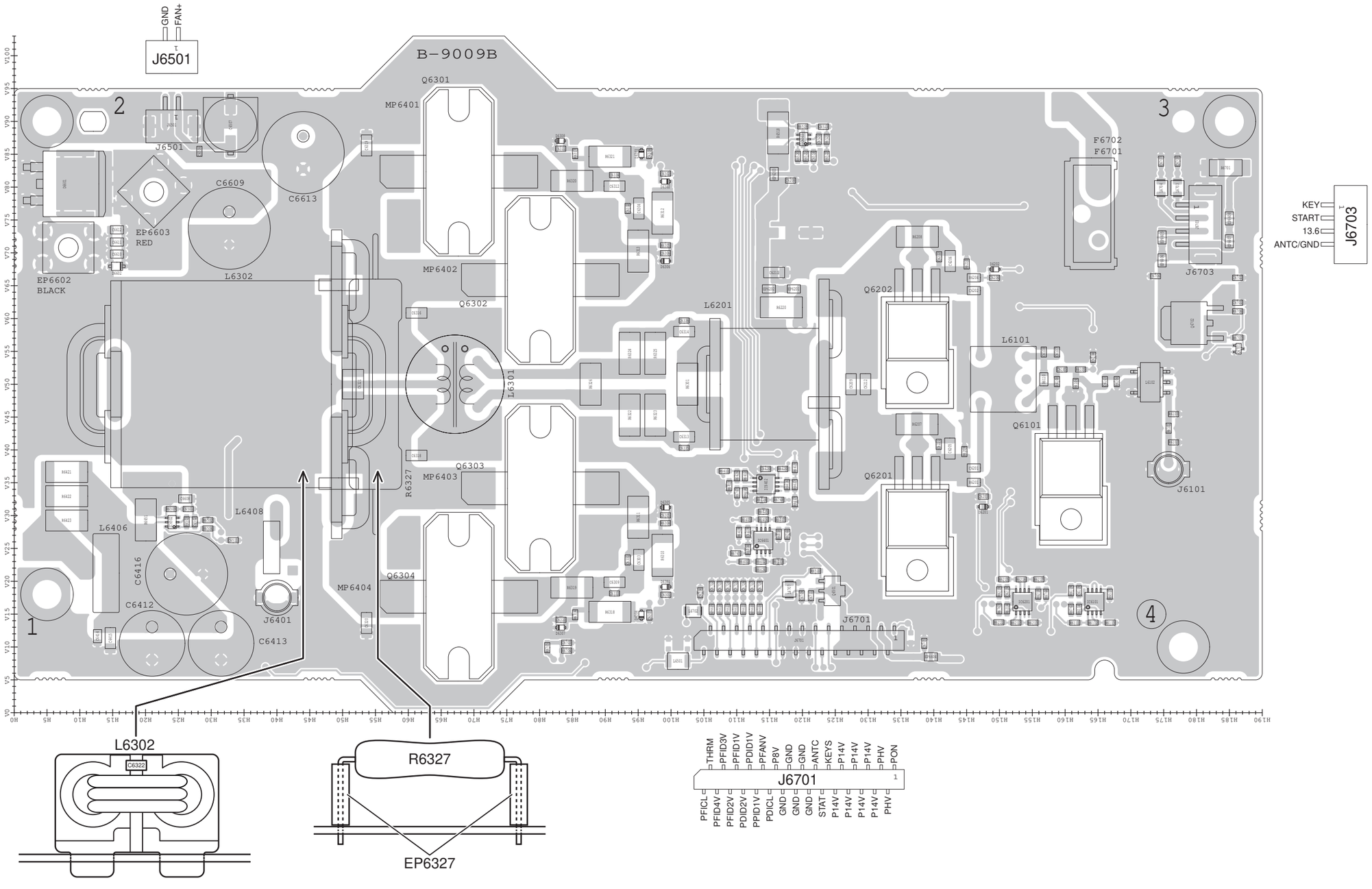

See the PARTS LIST H/V location on the PARTS LIST for location details.

The actual configuration of the PC board can be seen by viewing the top and bottom BOARD LAYOUT pages together.

• **PA UNIT (B-9009B: BOTTOM VIEW)**

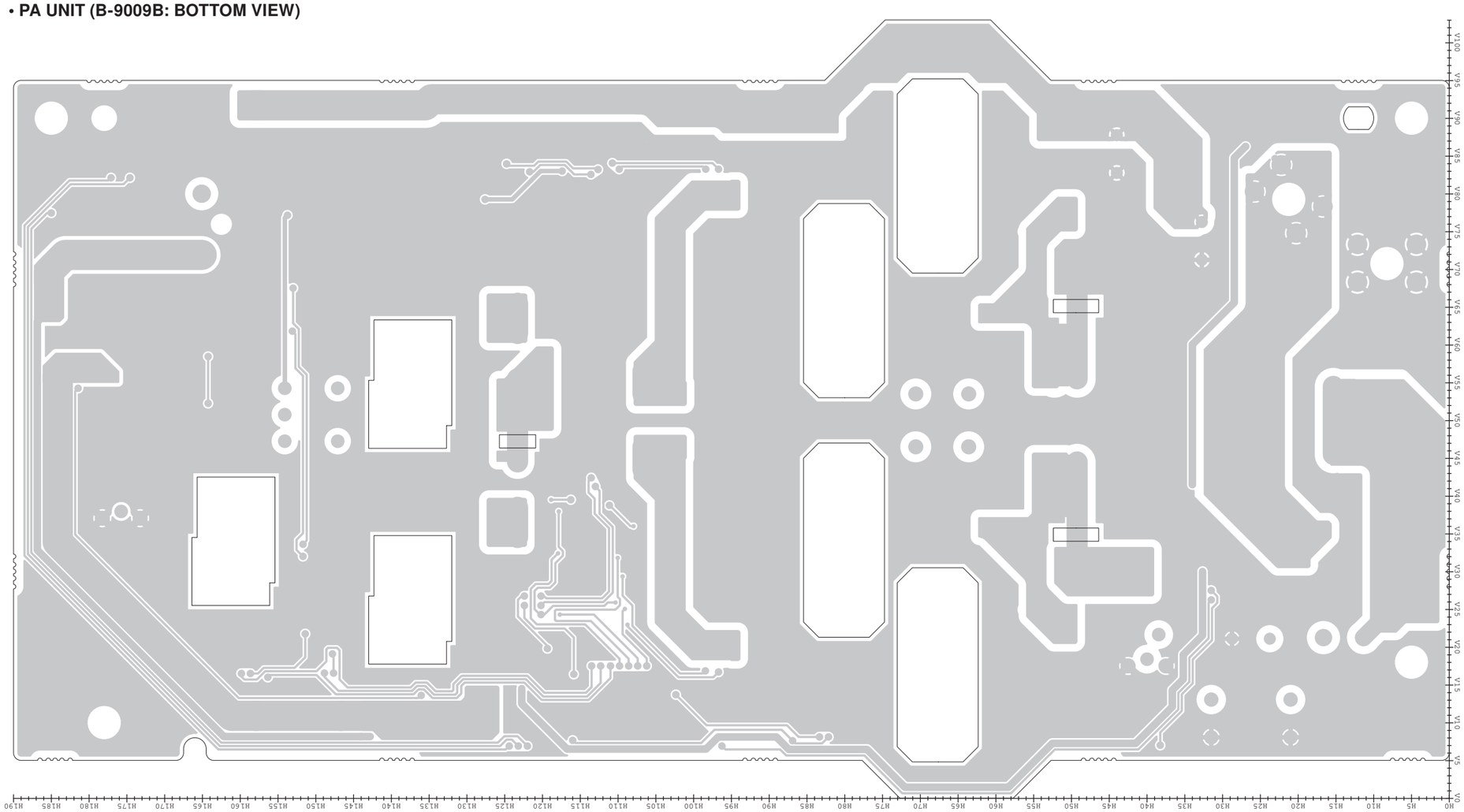

See the PARTS LIST H/V location on the PARTS LIST for location details.

The actual configuration of the PC board can be seen by viewing the top and bottom BOARD LAYOUT pages together.

• **DC-DC UNIT (B-9088A: TOP VIEW)**

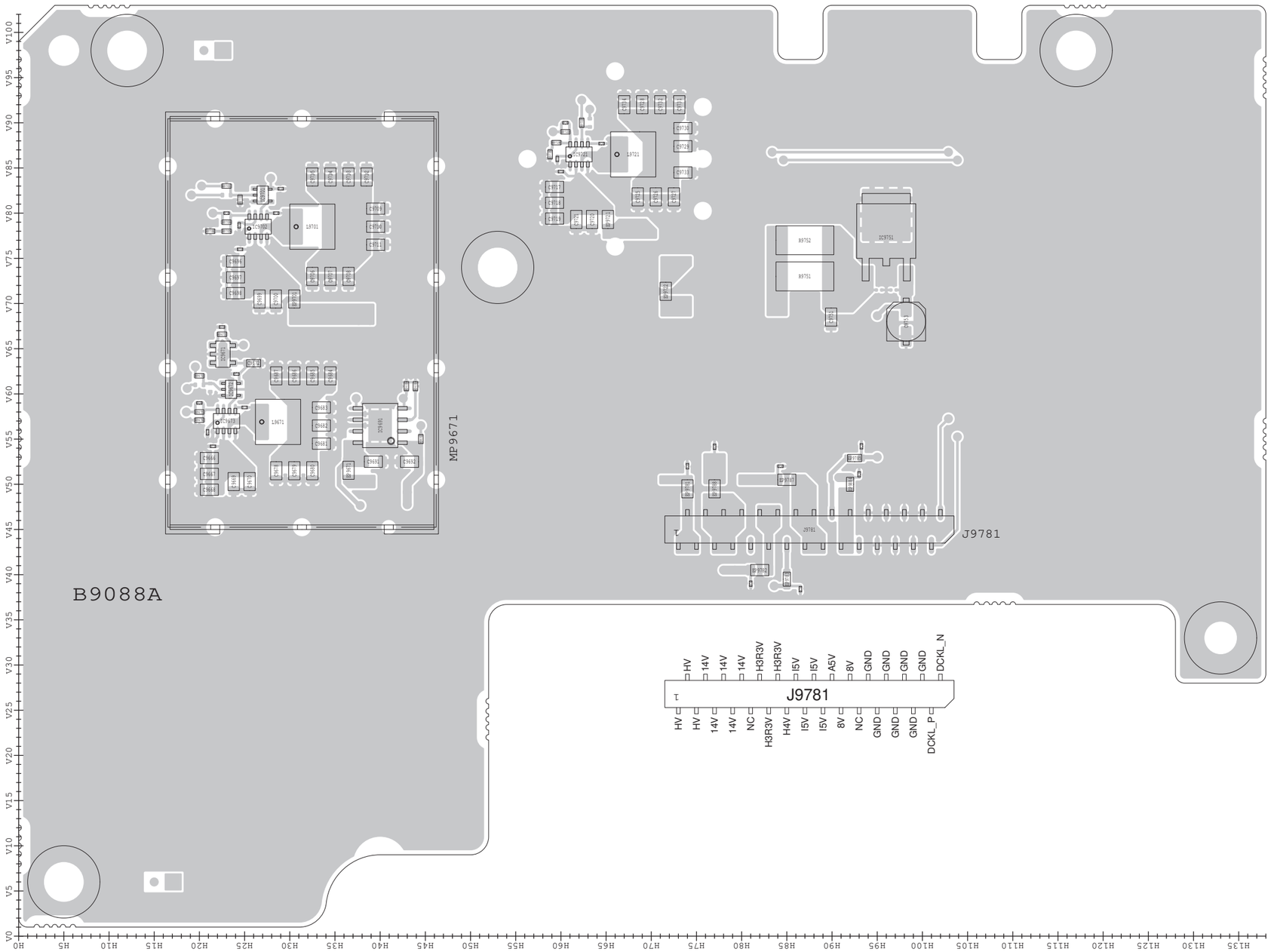

See the PARTS LIST H/V location on the PARTS LIST for location details.

The actual configuration of the PC board can be seen by viewing the top and bottom BOARD LAYOUT pages together.

• **DC-DC UNIT (B-9088A: BOTTOM VIEW)**

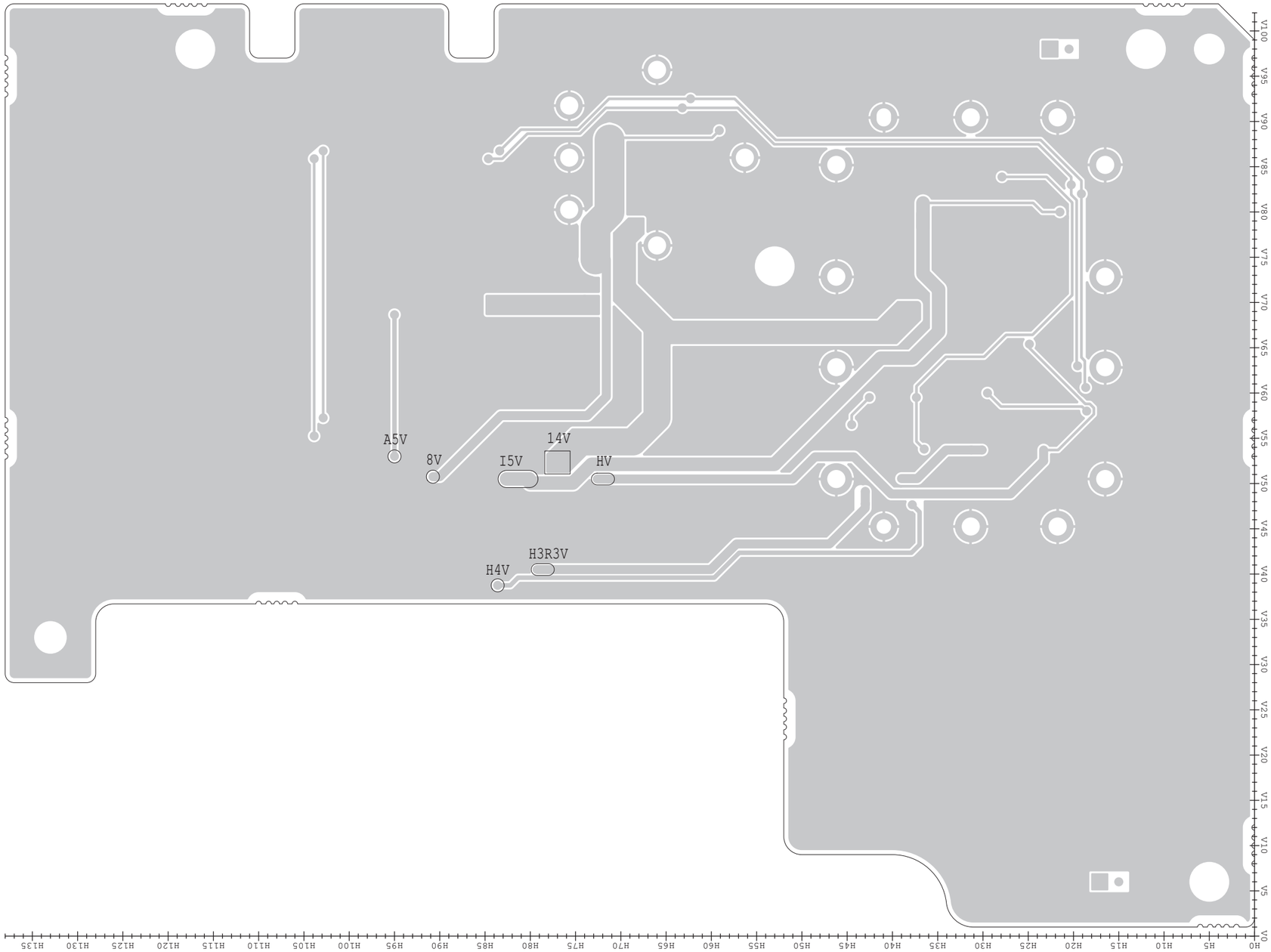

See the PARTS LIST H/V location on the PARTS LIST for location details.

The actual configuration of the PC board can be seen by viewing the top and bottom BOARD LAYOUT pages together.

• **FILTER UNIT (B-9010B: TOP VIEW)**

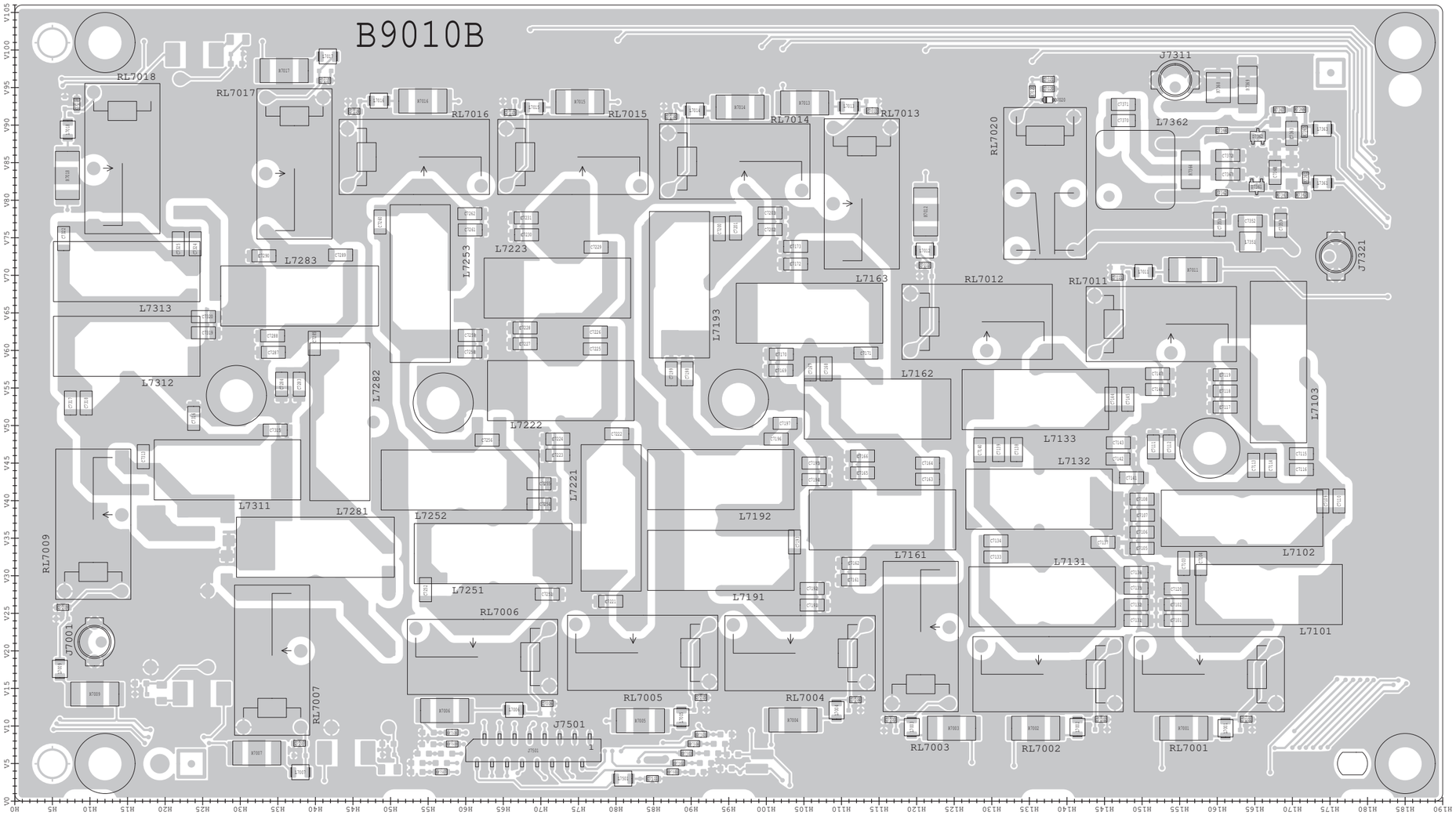

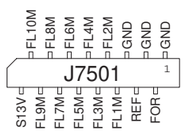

See the PARTS LIST H/V location on the PARTS LIST for location details.

The actual configuration of the PC board can be seen by viewing the top and bottom BOARD LAYOUT pages together.

• **FILTER UNIT (B-9010B: BOTTOM VIEW)**

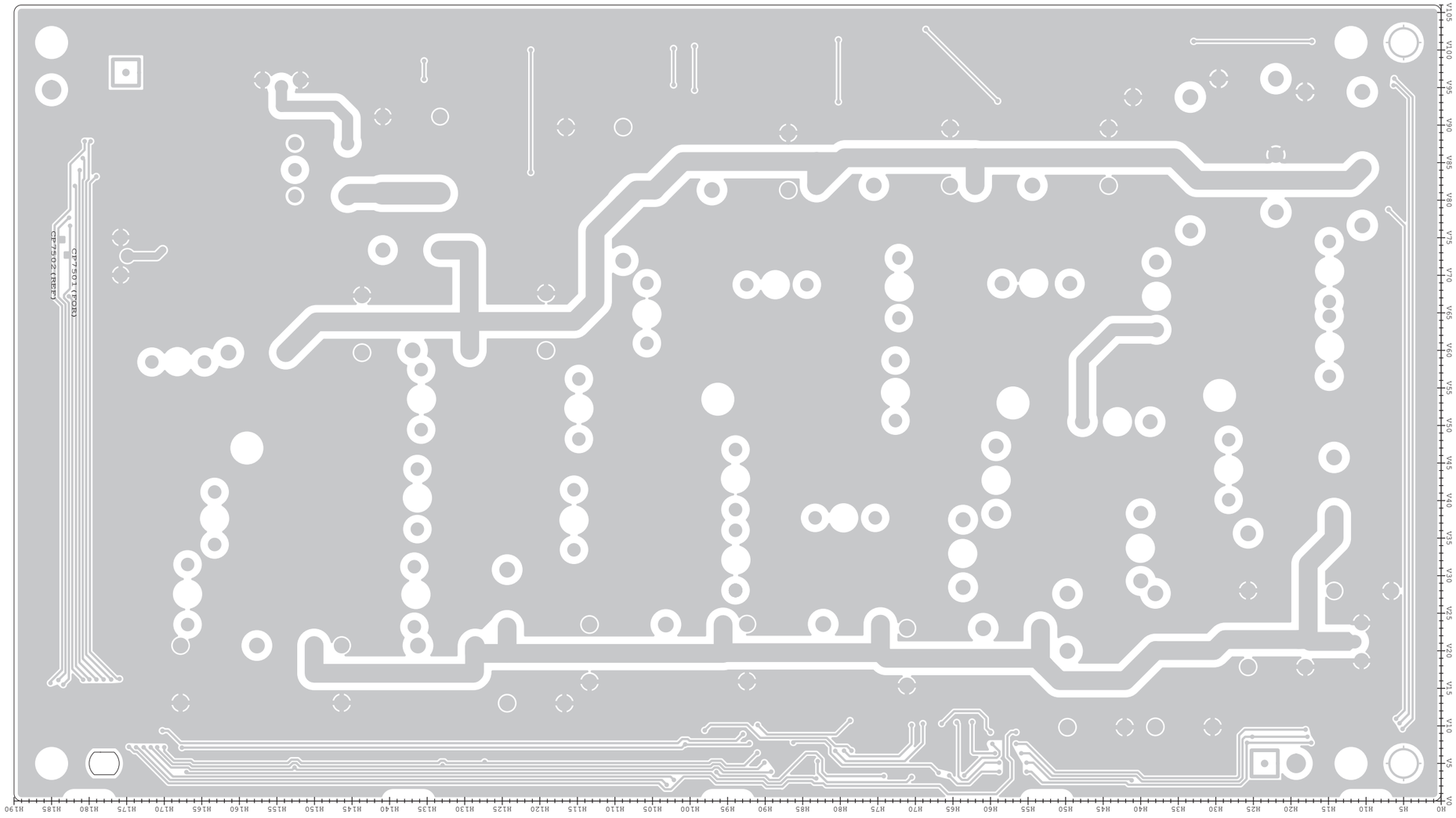

See the PARTS LIST H/V location on the PARTS LIST for location details.

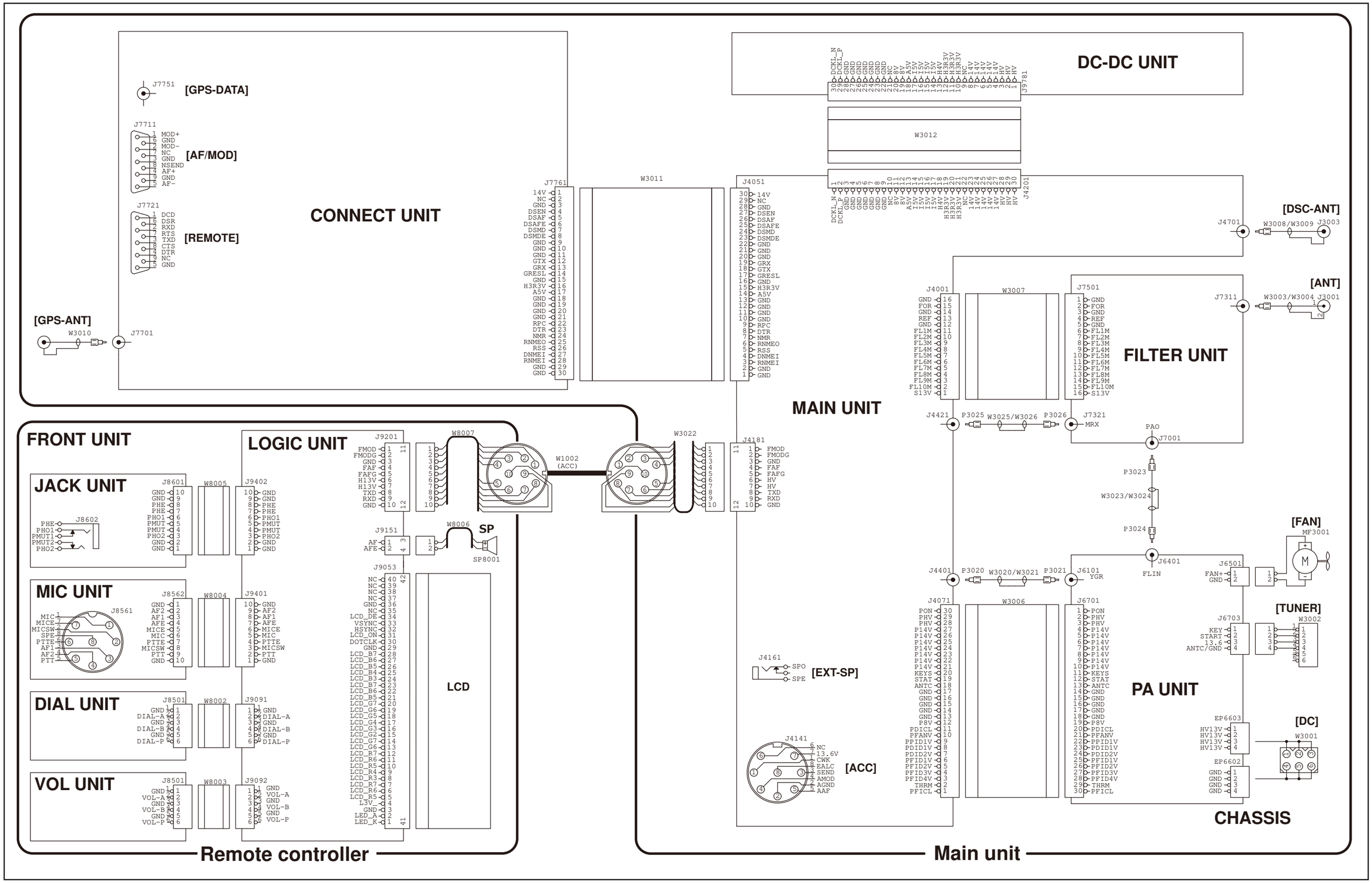
DC-DC UNIT
CONNECT UNIT
[GPS-DATA]
[AF/MOD]
[REMOTE]
[GPS-ANT]
[DSC-ANT]
[ANT]
MAIN UNIT
FILTER UNIT
[FAN]
[TUNER]
[EXT-SP]
[ACC]
[DC]
PA UNIT
CHASSIS
FRONT UNIT
LOGIC UNIT
JACK UNIT
MIC UNIT
DIAL UNIT
VOL UNIT
SP
LCD
Remote controller
Main unit

SECTION 10 BLOCK DIAGRAM

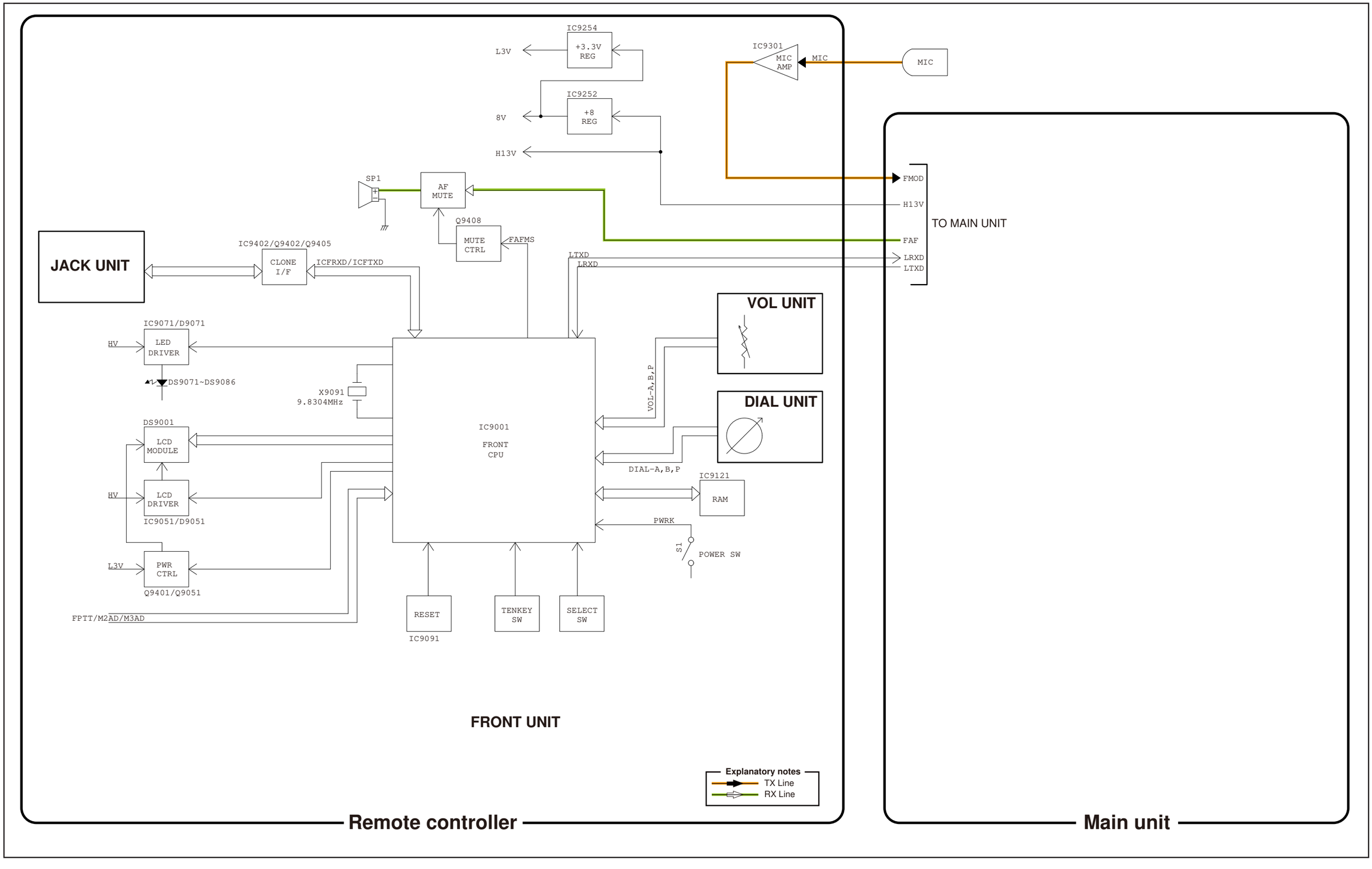

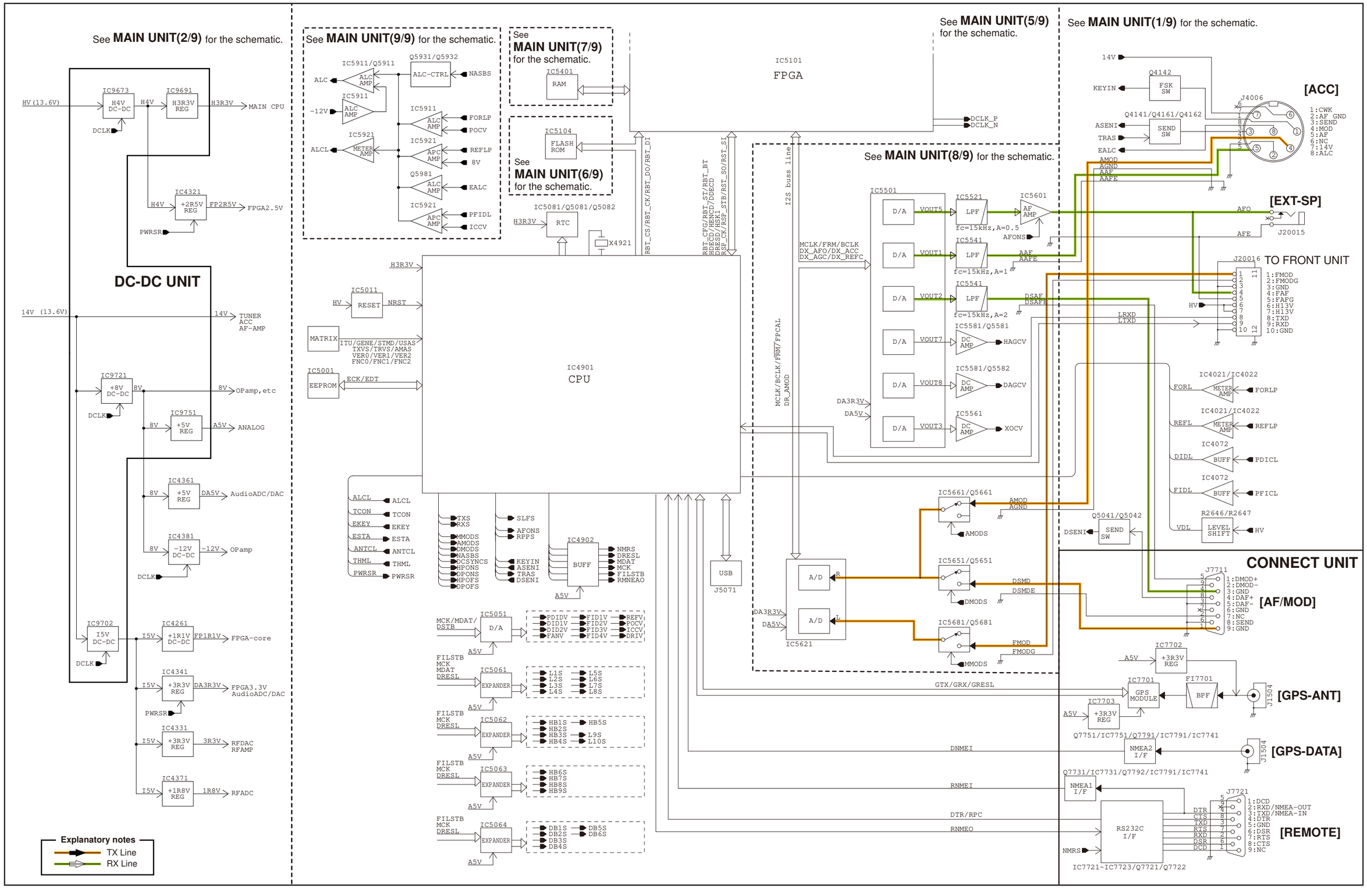
See MAIN UNIT(2/9) for the schematic.
See MAIN UNIT(9/9) for the schematic.
See MAIN UNIT(7/9) for the schematic.
See MAIN UNIT(6/9) for the schematic.
See MAIN UNIT(5/9) for the schematic.
See MAIN UNIT(1/9) for the schematic.
See MAIN UNIT(8/9) for the schematic.
DC-DC UNIT
IC5101
FPGA
IC4901
CPU
[ACC]
[EXT-SP]
TO FRONT UNIT
CONNECT UNIT
[AF/MOD]
[GPS-ANT]
[GPS-DATA]
[REMOTE]
Explanatory notes
TX Line
RX Line

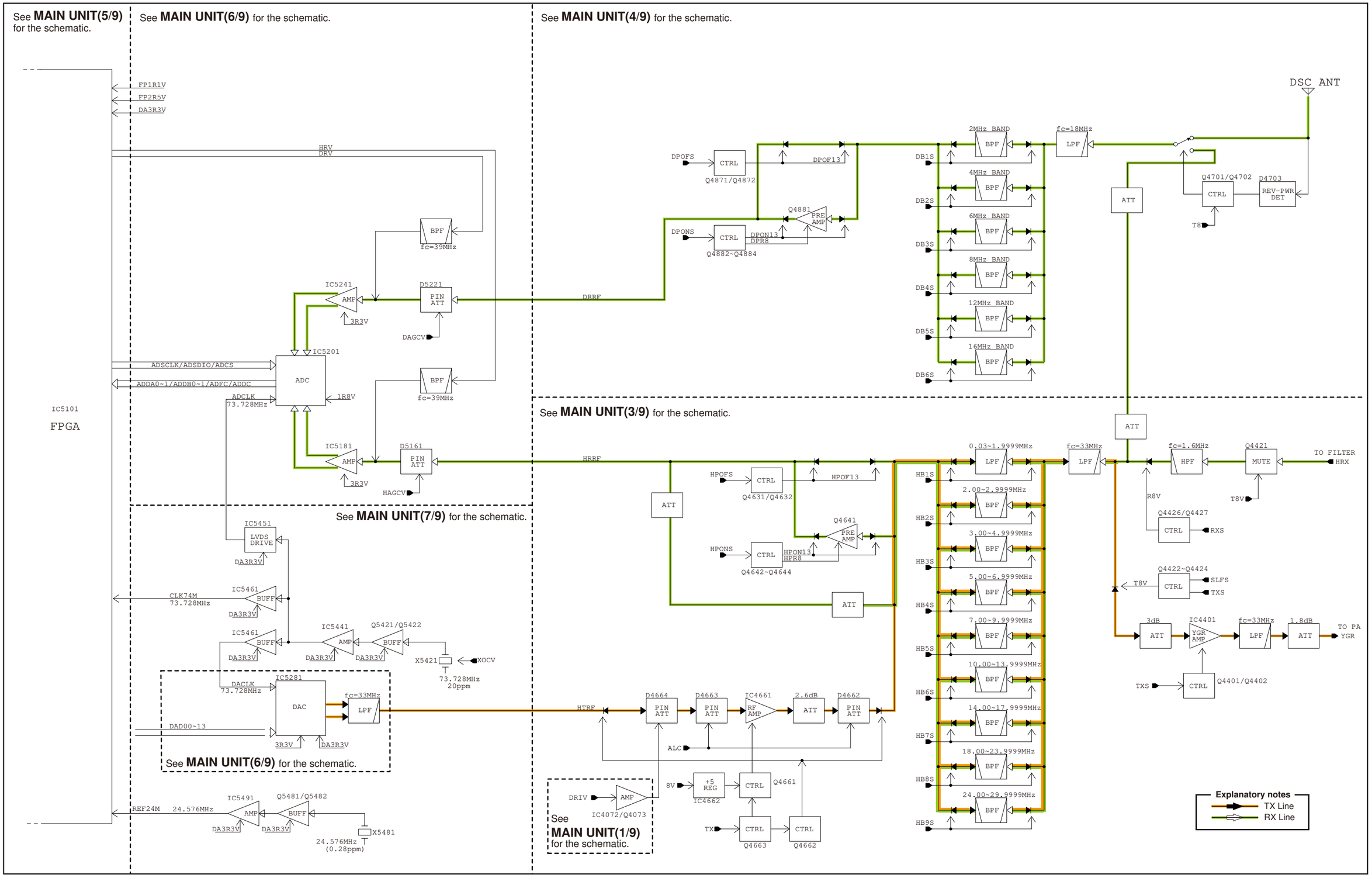
See MAIN UNIT(5/9) for the schematic.
See MAIN UNIT(6/9) for the schematic.
See MAIN UNIT(4/9) for the schematic.
See MAIN UNIT(3/9) for the schematic.
See MAIN UNIT(7/9) for the schematic.
See MAIN UNIT(6/9) for the schematic.
See MAIN UNIT(1/9) for the schematic.
FP1R1V
FP2R5V
DA3R3V
HRV
DRV
IC5101
FPGA
ADSCLK/ADSDIO/ADCS
ADDA0~1/ADDB0~1/ADFC/ADDC
ADCLK
73.728MHz
IC5201
ADC
1R8V
IC5241
AMP
3R3V
D5221
PIN ATT
DAGCV
BPF
fc=39MHz
IC5181
D5161
HAGCV
DRRF
HRRF
HTRF
DSC ANT
DPOFS
CTRL
Q4871/Q4872
DPOF13
DPONS
DPON13
DPR8
Q4882~Q4884
Q4881
PRE AMP
DB1S
DB2S
DB3S
DB4S
DB5S
DB6S
2MHz BAND
4MHz BAND
6MHz BAND
8MHz BAND
12MHz BAND
16MHz BAND
fc=18MHz
LPF
ATT
Q4701/Q4702
D4703
REV-PWR DET
T8
HPOFS
Q4631/Q4632
HPOF13
HPONS
HPON13
HPR8
Q4642~Q4644
Q4641
HB1S
HB2S
HB3S
HB4S
HB5S
HB6S
HB7S
HB8S
HB9S
0.03~1.9999MHz
2.00~2.9999MHz
3.00~4.9999MHz
5.00~6.9999MHz
7.00~9.9999MHz
10.00~13.9999MHz
14.00~17.9999MHz
18.00~23.9999MHz
24.00~29.9999MHz
fc=33MHz
fc=1.6MHz
HPF
Q4421
MUTE
TO FILTER
HRX
T8V
R8V
Q4426/Q4427
RXS
Q4422~Q4424
SLFS
TXS
3dB
IC4401
YGR AMP
1.8dB
TO PA
YGR
Q4401/Q4402
IC5451
LVDS DRIVE
CLK74M
73.728MHz
IC5461
BUFF
IC5441
Q5421/Q5422
X5421
XOCV
73.728MHz
20ppm
DACLK
73.728MHz
IC5281
DAC
DAD00~13
D4664
D4663
IC4661
RF AMP
2.6dB
D4662
ALC
8V
+5 REG
IC4662
Q4661
DRIV
IC4072/Q4073
TX
Q4663
Q4662
REF24M
24.576MHz
IC5491
Q5481/Q5482
X5481
24.576MHz
(0.28ppm)
Explanatory notes
TX Line
RX Line

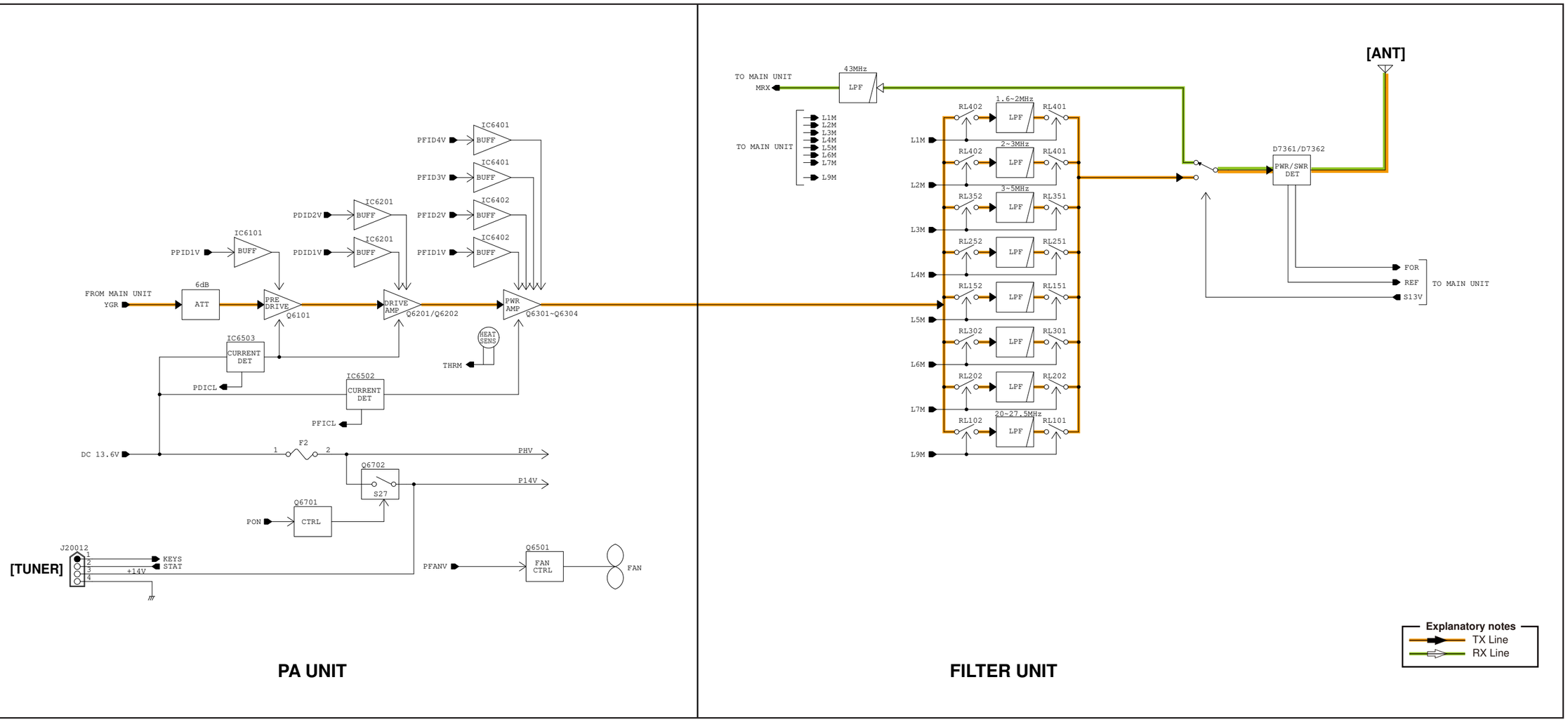
PA UNIT
FILTER UNIT
[TUNER]
[ANT]
J20012
KEYS
STAT
+14V
FROM MAIN UNIT
YGR
6dB
ATT
PRE DRIVE
Q6101
DRIVE AMP
Q6201/Q6202
PWR AMP
Q6301~Q6304
PPID1V
IC6101
BUFF
PDID2V
PDID1V
IC6201
PFID4V
PFID3V
PFID2V
PFID1V
IC6401
IC6402
IC6503
CURRENT DET
PDICL
IC6502
PFICL
HEAT SENS
THRM
DC 13.6V
F2
PHV
Q6702
S27
P14V
Q6701
CTRL
PON
PFANV
Q6501
FAN CTRL
FAN
TO MAIN UNIT
MRX
43MHz
LPF
L1M
L2M
L3M
L4M
L5M
L6M
L7M
L9M
1.6~2MHz
2~3MHz
3~5MHz
20~27.5MHz
RL402
RL401
RL352
RL351
RL252
RL251
RL152
RL151
RL302
RL301
RL202
RL102
RL101
D7361/D7362
PWR/SWR DET
FOR
REF
S13V
Explanatory notes
TX Line
RX Line

SECTION 11 VOLTAGE DIAGRAM

• **LOGIC UNIT**

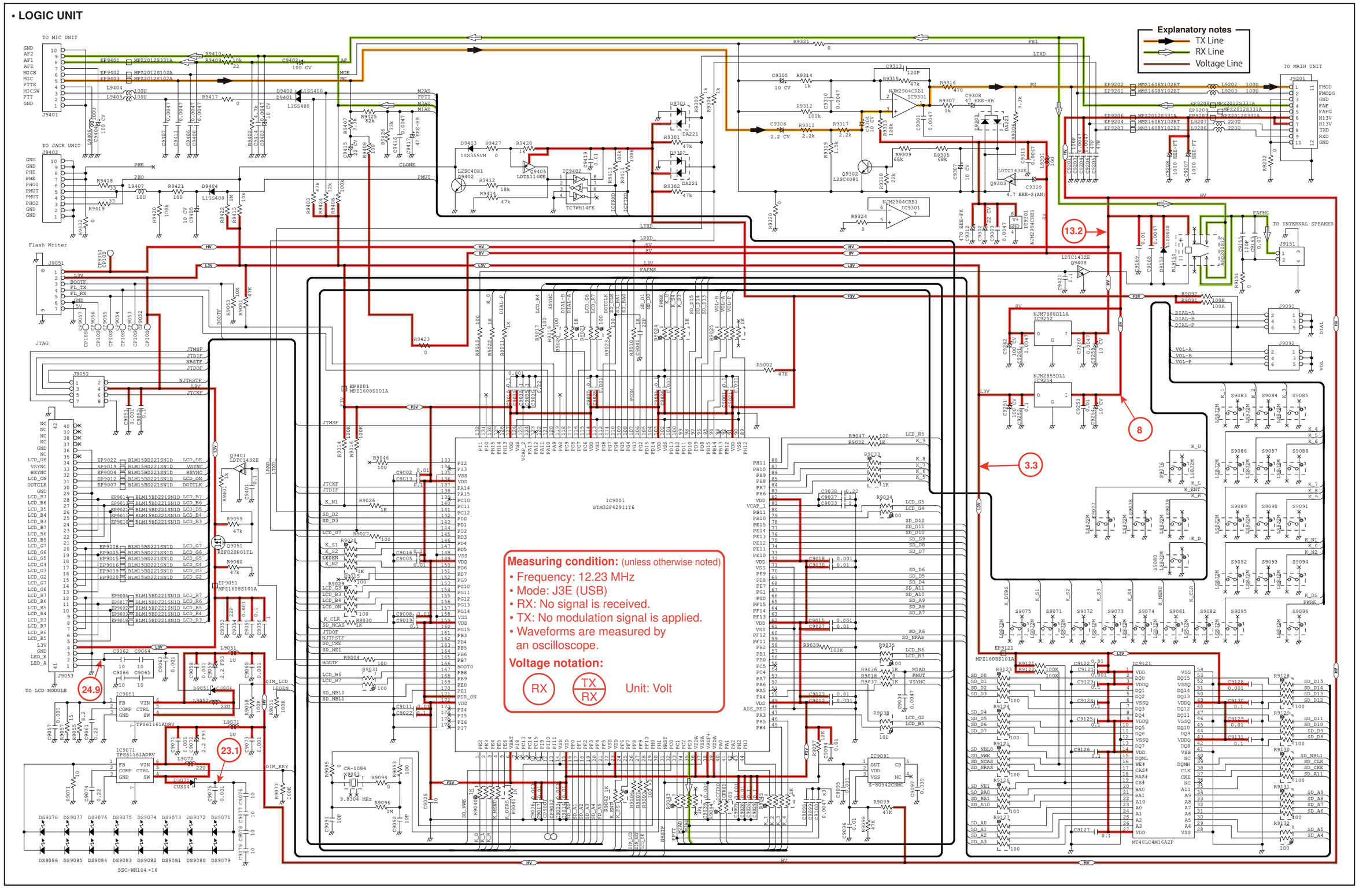

• DIAL UNIT

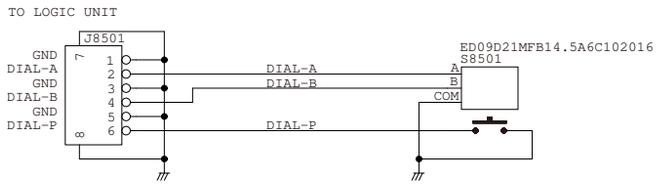

• JACK UNIT

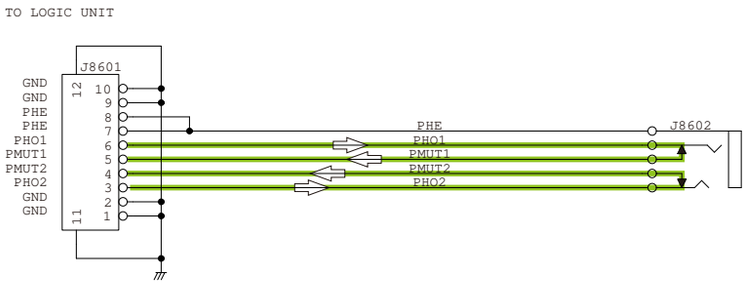

• MIC UNIT

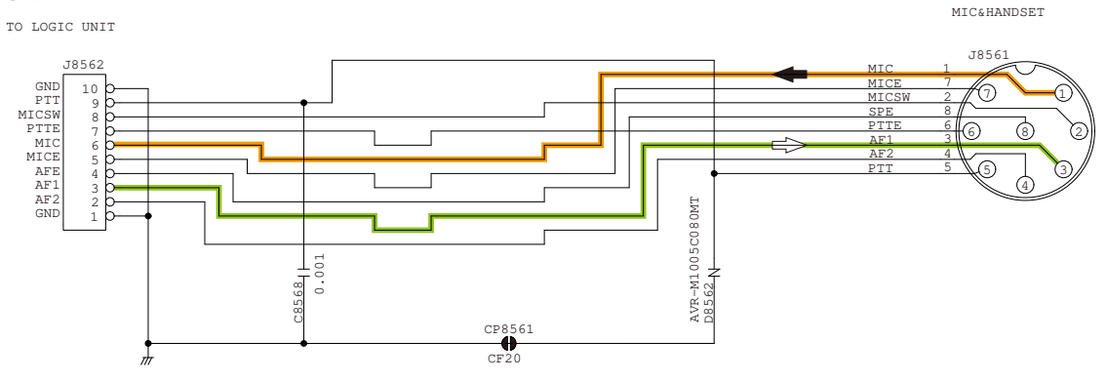

• VOL UNIT

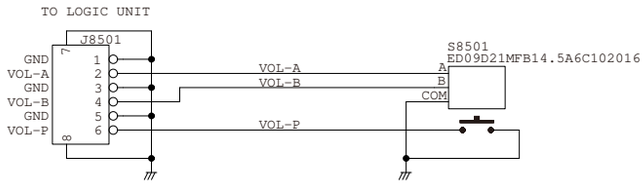

Explanatory notes

- TX Line
- RX Line
- Voltage Line

• **MAIN UNIT (1/9)**

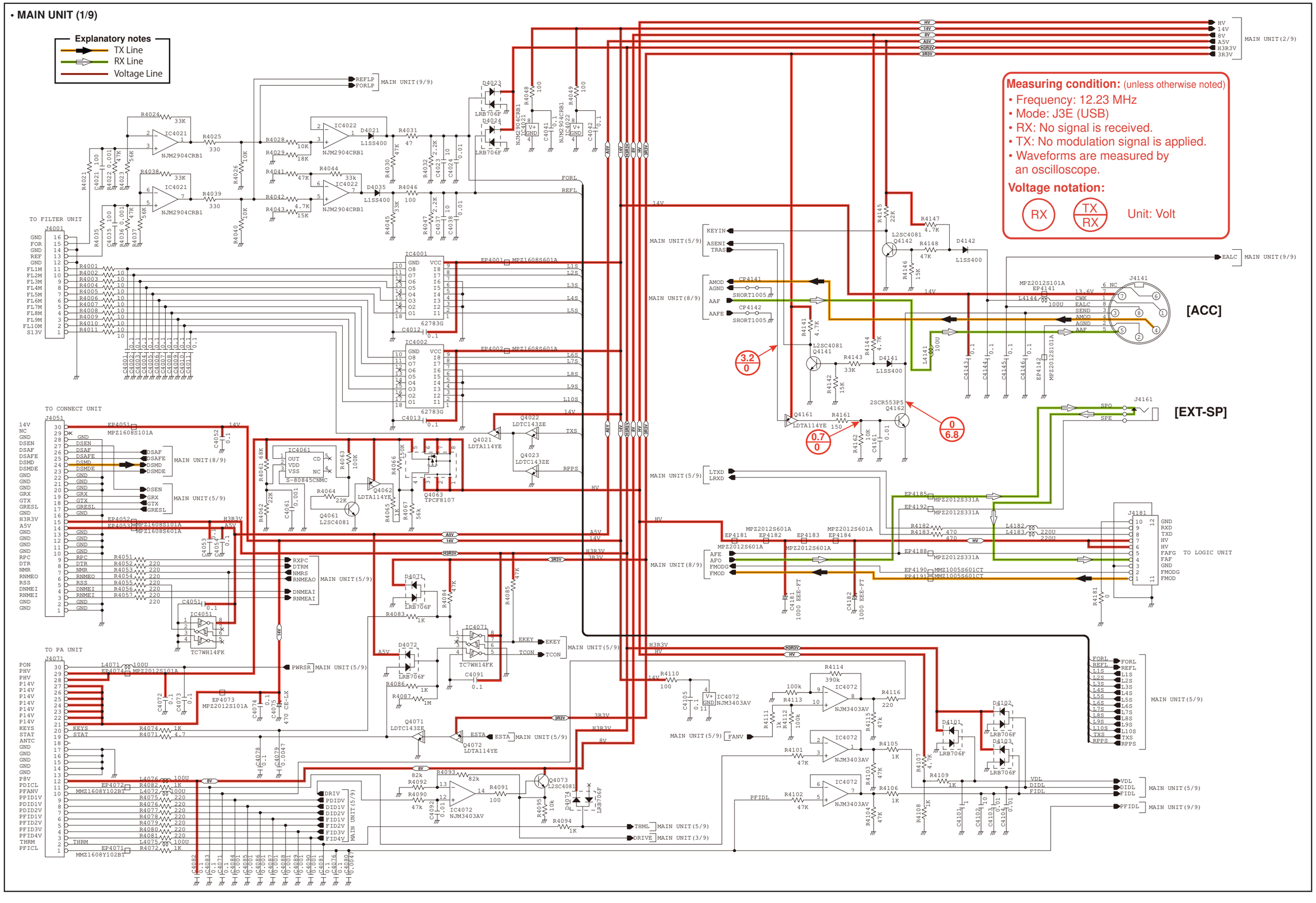
Explanatory notes
TX Line
RX Line
Voltage Line
Measuring condition: (unless otherwise noted)
• Frequency: 12.23 MHz
• Mode: J3E (USB)
• RX: No signal is received.
• TX: No modulation signal is applied.
• Waveforms are measured by an oscilloscope.
Voltage notation:
RX
TX
RX
Unit: Volt
[ACC]
[EXT-SP]
TO FILTER UNIT
TO CONNECT UNIT
TO PA UNIT
TO LOGIC UNIT
MAIN UNIT(2/9)
MAIN UNIT(9/9)
MAIN UNIT(5/9)
MAIN UNIT(8/9)
MAIN UNIT(3/9)

• **MAIN UNIT (2/9)**

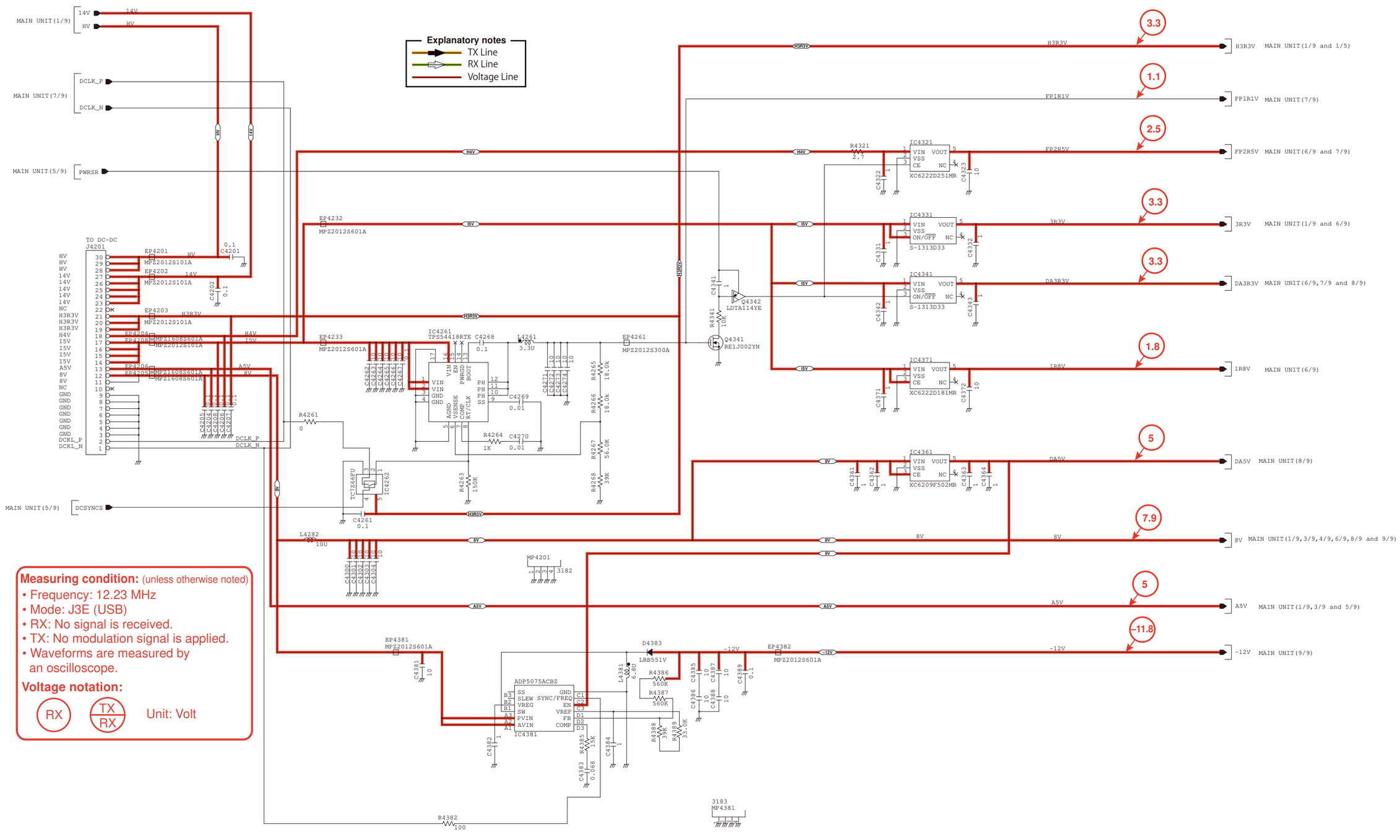
Explanatory notes
TX Line
RX Line
Voltage Line
MAIN UNIT(1/9)
14V
HV
MAIN UNIT(7/9)
DCLK_P
DCLK_N
MAIN UNIT(5/9)
PWRSR
MAIN UNIT(5/9)
DCSYNCS
TO DC-DC
J4201
EP4201
MPZ2012S101A
EP4202
EP4203
EP4204
EP4208
MPZ1608S601A
MPZ2012S101A
EP4206
EP4205
EP4232
MPZ2012S601A
EP4233
EP4261
MPZ2012S300A
IC4261
TPS54418RTE
C4268
L4261
3.3U
R4261
0
R4264
1K
C4270
0.01
C4269
0.01
R4263
150K
R4265
18.0K
R4266
18.0K
R4267
56.0K
R4268
39K
TC7S66FU
IC4262
C4261
0.1
L4282
10U
MP4201
3182
EP4381
MPZ2012S601A
D4383
LRB551V
L4381
0.68
R4386
560K
R4387
560K
R4388
39K
R4389
33.0K
ADP5075ACBZ
IC4381
R4385
15K
C4383
0.068
C4384
R4382
100
3183
MP4381
EP4382
MPZ2012S601A
-12V
Q4341
RE1J002YN
Q4342
LDTA114YE
R4341
10K
IC4321
XC6222D251MR
R4321
2.7
IC4331
S-1313D33
IC4341
S-1313D33
IC4371
XC6222D181MR
IC4361
XC6209F502MR
H3R3V
FP1R1V
FP2R5V
3R3V
DA3R3V
1R8V
DA5V
8V
A5V
-12V
3.3
1.1
2.5
3.3
3.3
1.8
5
7.9
5
-11.8
H3R3V MAIN UNIT(1/9 and 1/5)
FP1R1V MAIN UNIT(7/9)
FP2R5V MAIN UNIT(6/9 and 7/9)
3R3V MAIN UNIT(1/9 and 6/9)
DA3R3V MAIN UNIT(6/9,7/9 and 8/9)
1R8V MAIN UNIT(6/9)
DA5V MAIN UNIT(8/9)
8V MAIN UNIT(1/9,3/9,4/9,6/9,8/9 and 9/9)
A5V MAIN UNIT(1/9,3/9 and 5/9)
-12V MAIN UNIT(9/9)
Measuring condition: (unless otherwise noted)
• Frequency: 12.23 MHz
• Mode: J3E (USB)
• RX: No signal is received.
• TX: No modulation signal is applied.
• Waveforms are measured by an oscilloscope.
Voltage notation:
RX
TX
RX
Unit: Volt

• MAIN UNIT (3/9)

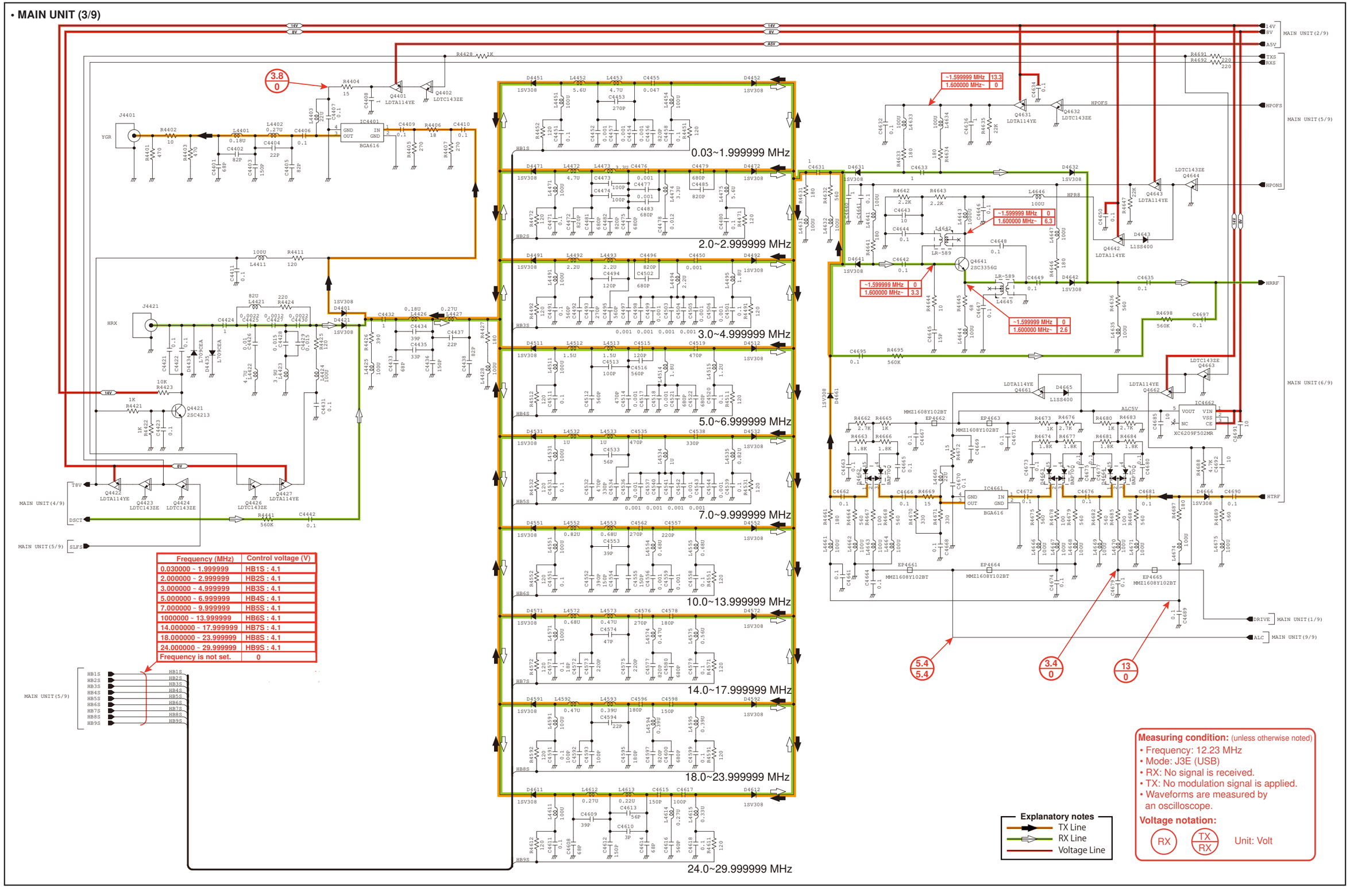

Frequency (MHz)	Control voltage (V)
0.030000 ~ 1.999999	HB1S : 4.1
2.000000 ~ 2.999999	HB2S : 4.1
3.000000 ~ 4.999999	HB3S : 4.1
5.000000 ~ 6.999999	HB4S : 4.1
7.000000 ~ 9.999999	HB5S : 4.1
1000000 ~ 13.999999	HB6S : 4.1
14.000000 ~ 17.999999	HB7S : 4.1
18.000000 ~ 23.999999	HB8S : 4.1
24.000000 ~ 29.999999	HB9S : 4.1
Frequency is not set.	0

• **MAIN UNIT (4/9)**

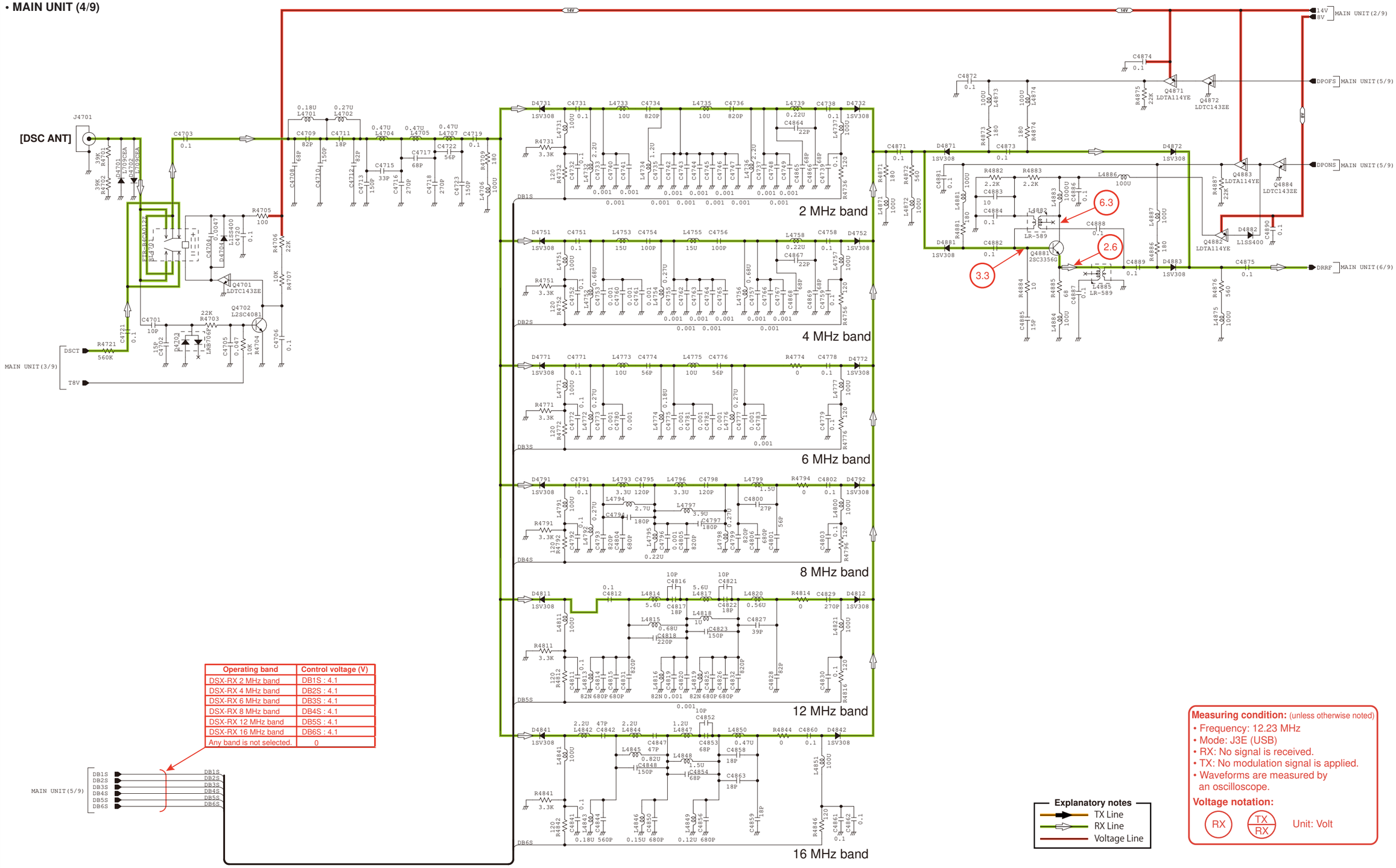

Operating band	Control voltage (V)
DSX-RX 2 MHz band	DB1S : 4.1
DSX-RX 4 MHz band	DB2S : 4.1
DSX-RX 6 MHz band	DB3S : 4.1
DSX-RX 8 MHz band	DB4S : 4.1
DSX-RX 12 MHz band	DB5S : 4.1
DSX-RX 16 MHz band	DB6S : 4.1
Any band is not selected.	0

Explanatory notes
- TX Line
- RX Line
- Voltage Line

Measuring condition: (unless otherwise noted)
- Frequency: 12.23 MHz
- Mode: J3E (USB)
- RX: No signal is received.
- TX: No modulation signal is applied.
- Waveforms are measured by an oscilloscope.

Voltage notation:

RX | TX/RX | Unit: Volt

• MAIN UNIT (5/9)

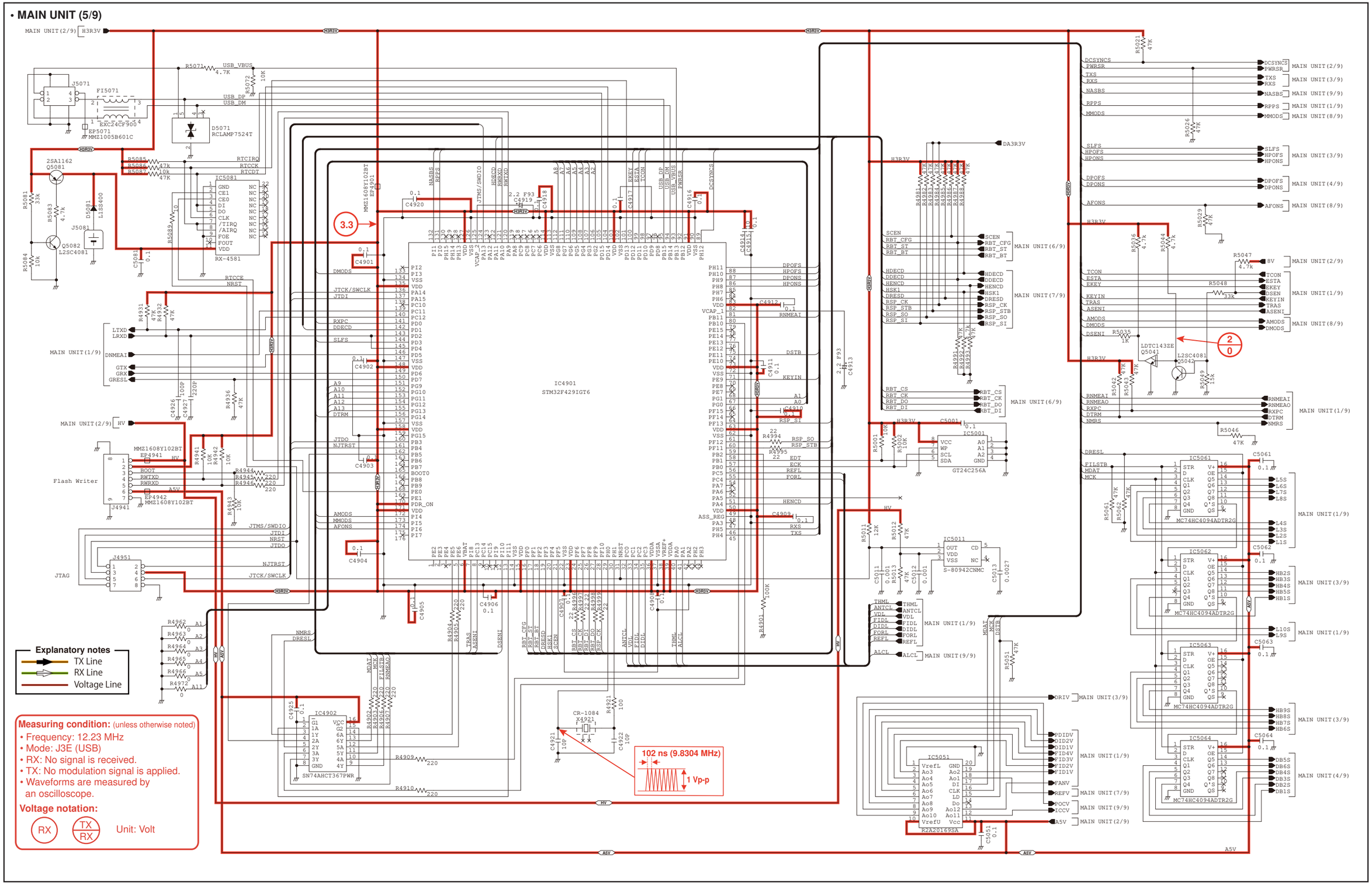
IC4901
STM32F429IGT6
IC5011
S-80942CNMC
IC5001
GT24C256A
IC5051
R2A20169SA
IC5061
IC5062
IC5063
IC5064
MC74HC4094ADTR2G
IC4902
SN74AHCT367PWR
IC5081
RX-4581
Flash Writer
JTAG
Explanatory notes
TX Line
RX Line
Voltage Line
Measuring condition: (unless otherwise noted)
• Frequency: 12.23 MHz
• Mode: J3E (USB)
• RX: No signal is received.
• TX: No modulation signal is applied.
• Waveforms are measured by an oscilloscope.
Voltage notation:
RX
TX
RX
Unit: Volt
102 ns (9.8304 MHz)
1 Vp-p
3.3
2
0

• MAIN UNIT (6/9)

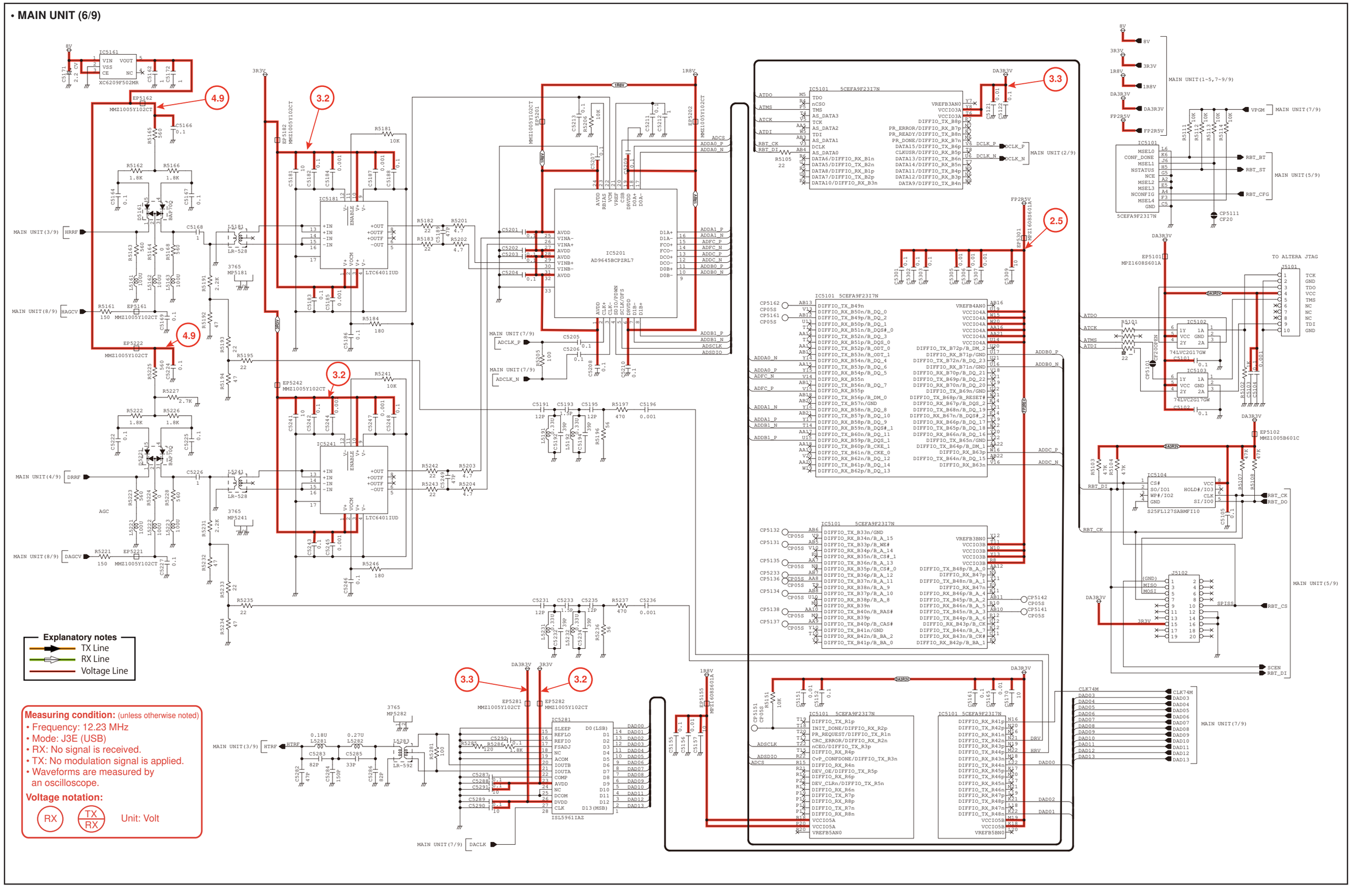
IC5161
XC6209F502MR
EP5162
MMZ1005Y102CT
4.9
3.2
3.3
2.5
IC5181
LTC6401IUD
IC5241
IC5201
AD9645BCPZRL7
IC5101
5CEFA9F23I7N
IC5281
ISL5961IAZ
MAIN UNIT(3/9)
MAIN UNIT(8/9)
MAIN UNIT(4/9)
MAIN UNIT(7/9)
MAIN UNIT(2/9)
MAIN UNIT(1~5,7~9/9)
MAIN UNIT(5/9)
TO ALTERA JTAG
S25FL127SABMFI10
74LVC2G17GW
Explanatory notes
TX Line
RX Line
Voltage Line
Measuring condition: (unless otherwise noted)
• Frequency: 12.23 MHz
• Mode: J3E (USB)
• RX: No signal is received.
• TX: No modulation signal is applied.
• Waveforms are measured by an oscilloscope.
Voltage notation:
RX
TX RX
Unit: Volt

• MAIN UNIT (7/9)

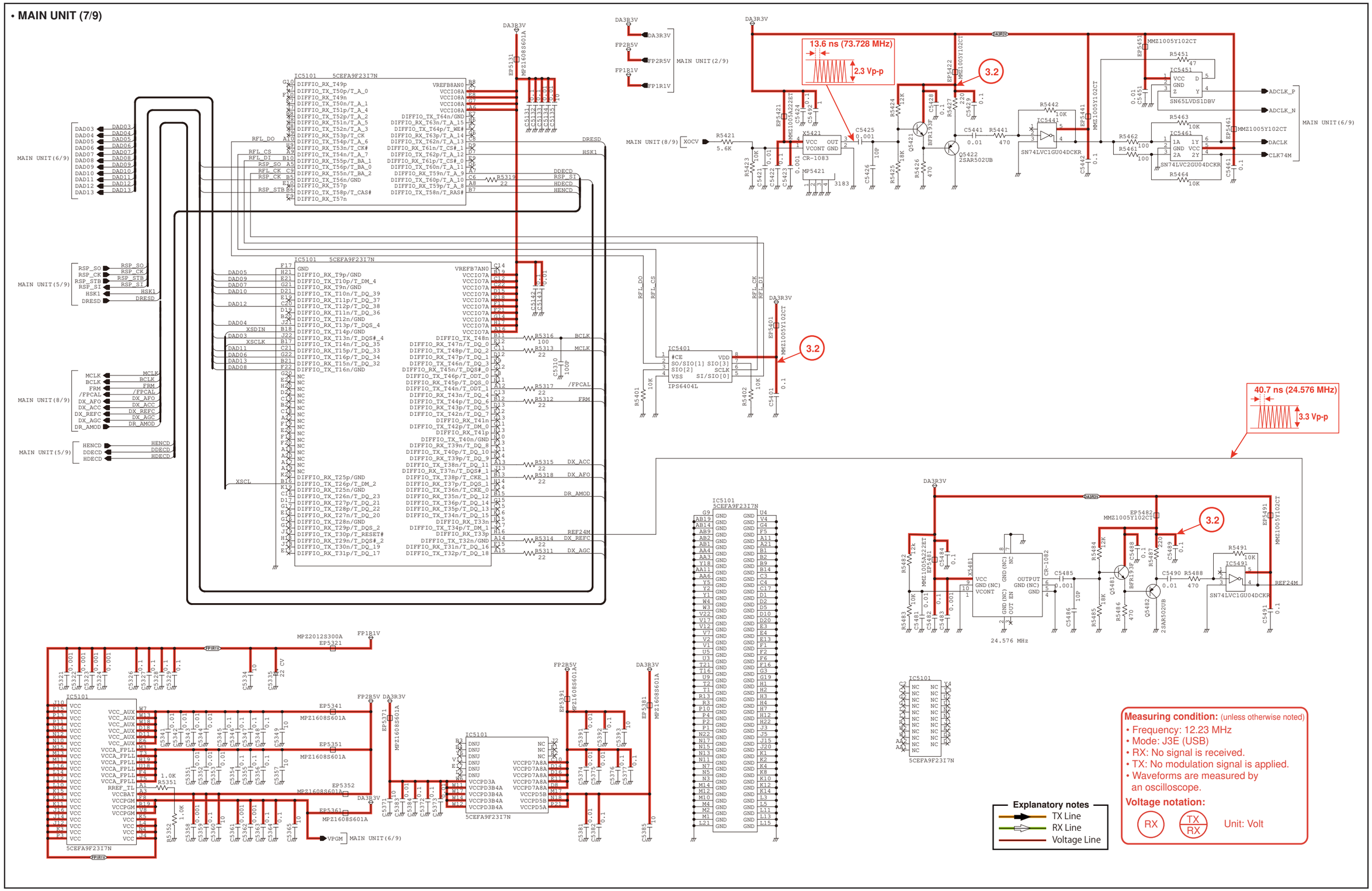
IC5101 5CEFA9F23I7N
MAIN UNIT(6/9)
MAIN UNIT(5/9)
MAIN UNIT(8/9)
MAIN UNIT(2/9)
MAIN UNIT(6/9)
13.6 ns (73.728 MHz)
2.3 Vp-p
3.2
40.7 ns (24.576 MHz)
3.3 Vp-p
24.576 MHz
IC5401 IPS6404L
IC5451 SN65LVDS1DBV
IC5441 SN74LVC1GU04DCKR
IC5461 SN74LVC2GU04DCKR
IC5491 SN74LVC1GU04DCKR
X5421 CR-1083
X5481 CR-1082
Q5421 BFR193F
Q5422 2SAR502UB
Q5482 2SAR502UB
MP5421 3183
MP22012S300A
Measuring condition: (unless otherwise noted)
• Frequency: 12.23 MHz
• Mode: J3E (USB)
• RX: No signal is received.
• TX: No modulation signal is applied.
• Waveforms are measured by an oscilloscope.
Voltage notation:
RX
TX RX
Unit: Volt
Explanatory notes
TX Line
RX Line
Voltage Line

• MAIN UNIT (8/9)

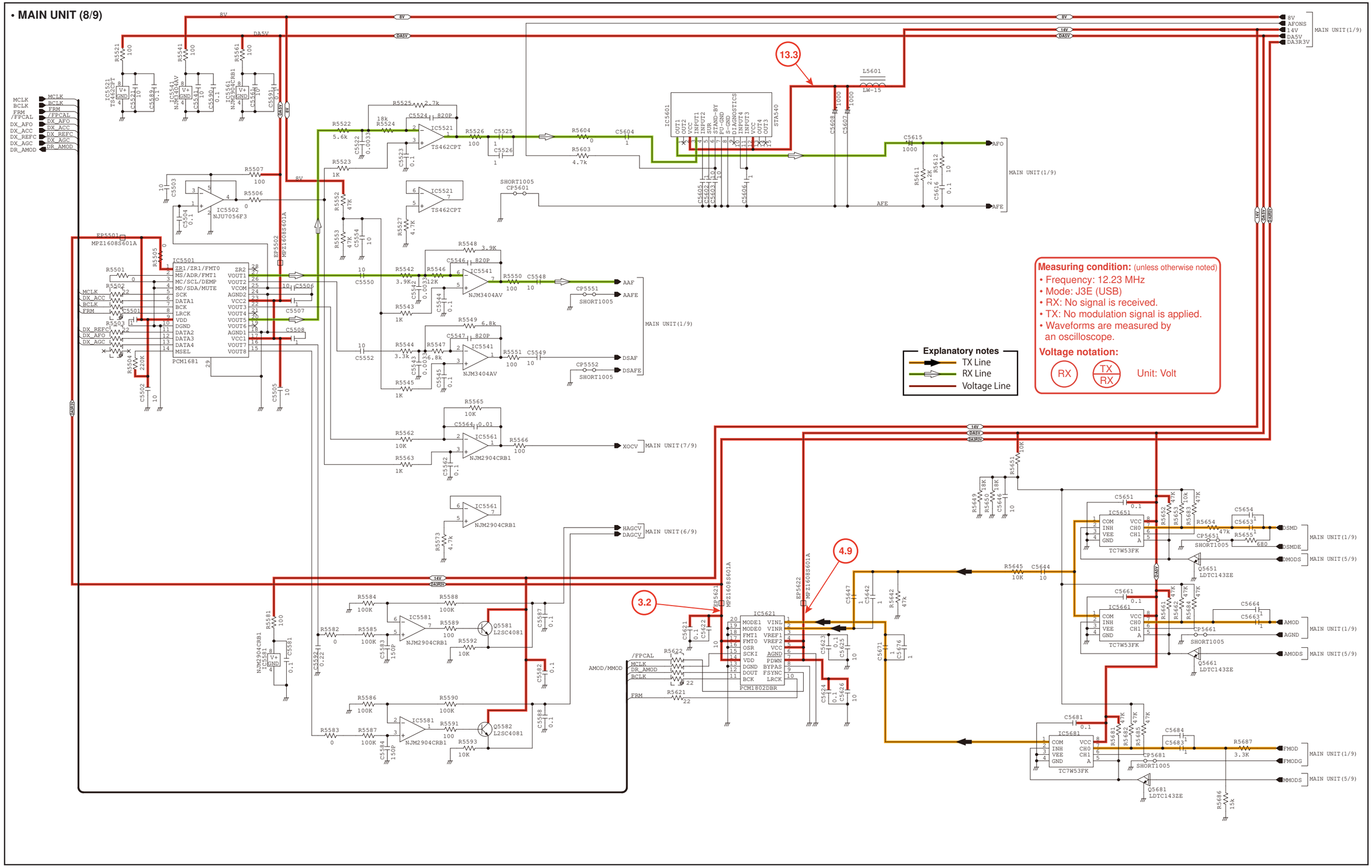
Measuring condition: (unless otherwise noted)
• Frequency: 12.23 MHz
• Mode: J3E (USB)
• RX: No signal is received.
• TX: No modulation signal is applied.
• Waveforms are measured by an oscilloscope.
Voltage notation:
RX
TX RX
Unit: Volt
Explanatory notes
TX Line
RX Line
Voltage Line
13.3
4.9
3.2
IC5501 PCM1681
IC5502 NJU7056F3
IC5521 TS462CPT
IC5541 NJM3404AV
IC5561 NJM2904CRB1
IC5581 NJM2904CRB1
IC5601 STA540
IC5621 PCM1802DBR
IC5651 TC7W53FK
IC5661 TC7W53FK
IC5681 TC7W53FK
Q5581 L2SC4081
Q5582 L2SC4081
Q5651 LDTC143ZE
Q5661 LDTC143ZE
Q5681 LDTC143ZE
L5601 LW-15
MAIN UNIT(1/9)
MAIN UNIT(7/9)
MAIN UNIT(6/9)
MAIN UNIT(5/9)

• MAIN UNIT (9/9)

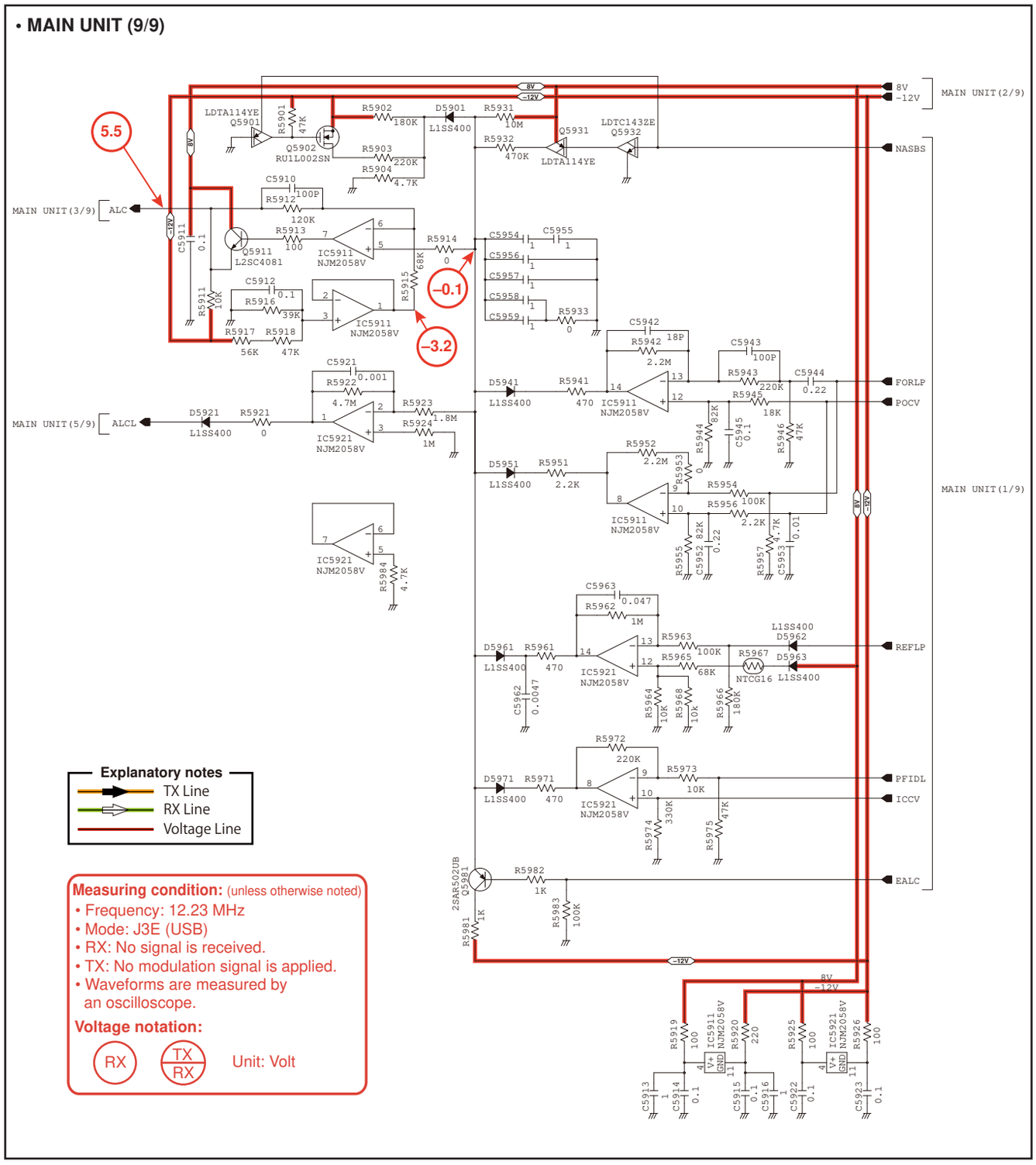

Explanatory notes

- TX Line
- RX Line
- Voltage Line

Measuring condition: (unless otherwise noted)

- Frequency: 12.23 MHz
- Mode: J3E (USB)
- RX: No signal is received.
- TX: No modulation signal is applied.
- Waveforms are measured by an oscilloscope.

Voltage notation:

RX TX/RX Unit: Volt

• **PA UNIT**

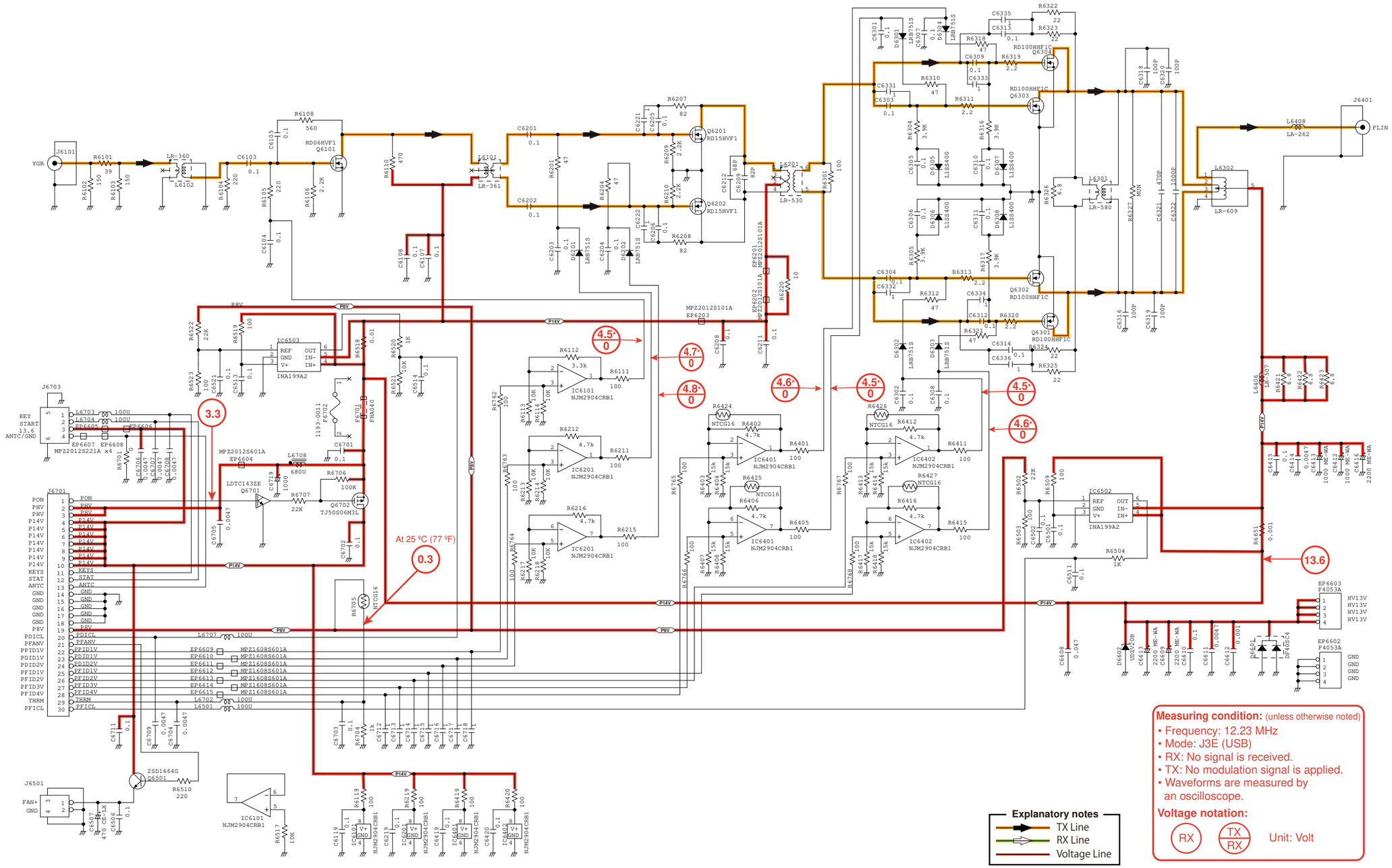
Explanatory notes
TX Line
RX Line
Voltage Line
Measuring condition: (unless otherwise noted)
• Frequency: 12.23 MHz
• Mode: J3E (USB)
• RX: No signal is received.
• TX: No modulation signal is applied.
• Waveforms are measured by an oscilloscope.
Voltage notation:
RX
TX
RX
Unit: Volt
*:Reference value
At 25 °C (77 °F)
0.3
3.3
4.5*
0
4.7*
0
4.8*
0
4.6*
0
4.5*
0
4.5*
0
4.6*
0
13.6

• **FILTER UNIT**

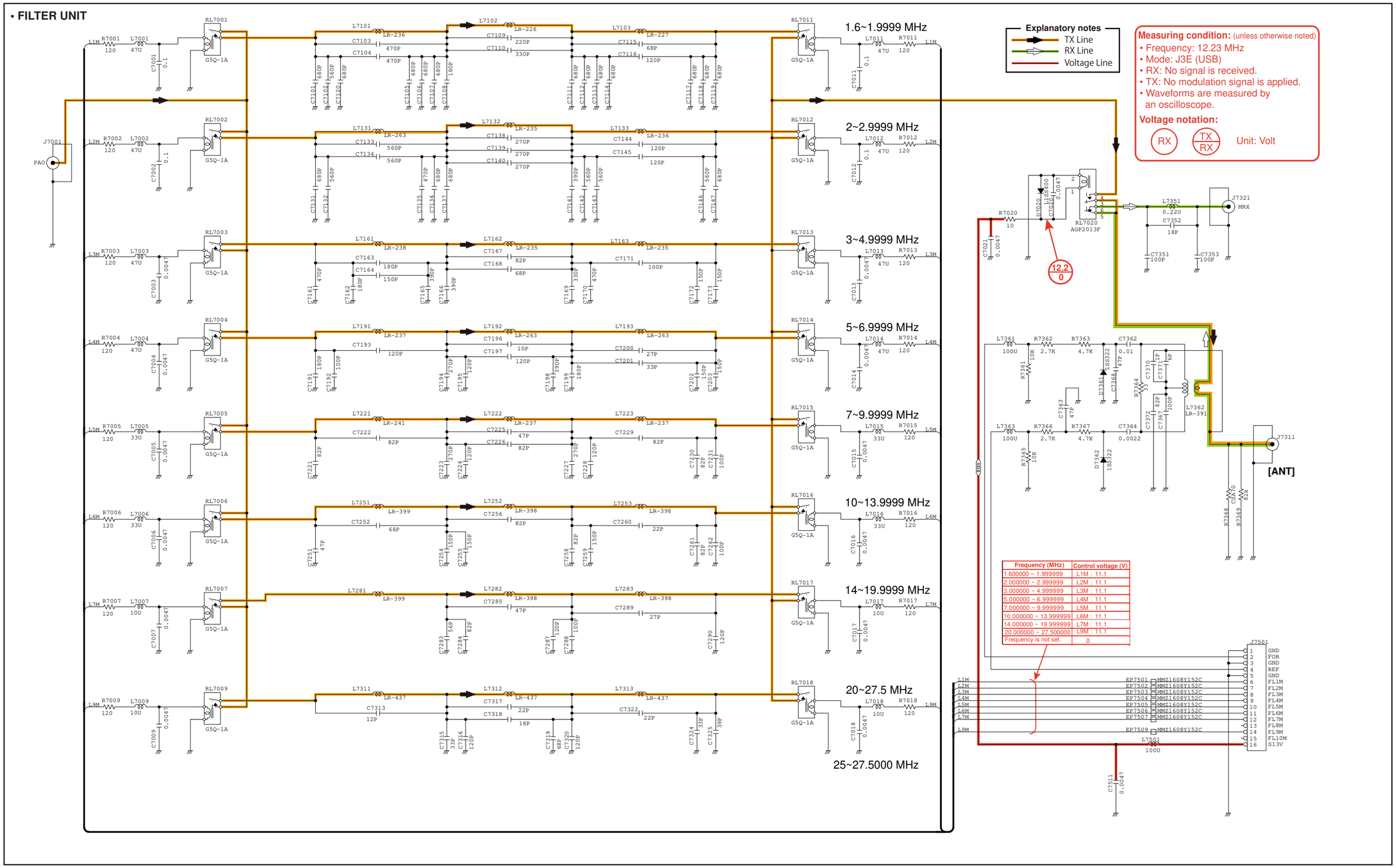

Frequency (MHz)	Control voltage (V)
1.600000 ~ 1.999999	L1M : 11.1
2.000000 ~ 2.999999	L2M : 11.1
3.000000 ~ 4.999999	L3M : 11.1
5.000000 ~ 6.999999	L4M : 11.1
7.000000 ~ 9.999999	L5M : 11.1
10.000000 ~ 13.999999	L6M : 11.1
14.000000 ~ 19.999999	L7M : 11.1
20.000000 ~ 27.500000	L9M : 11.1
Frequency is not set.	0

• CONNECT UNIT

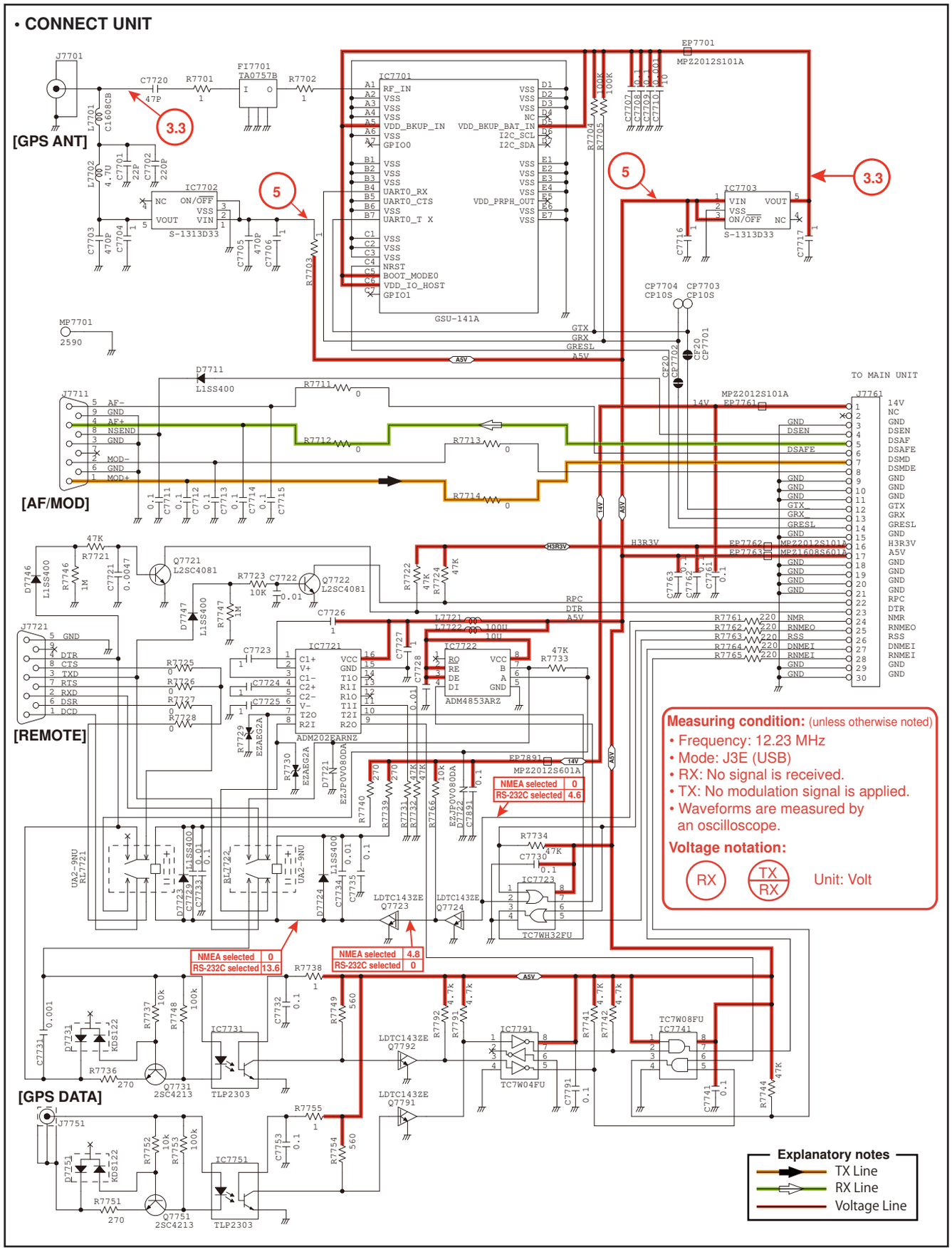

• DC-DC UNIT

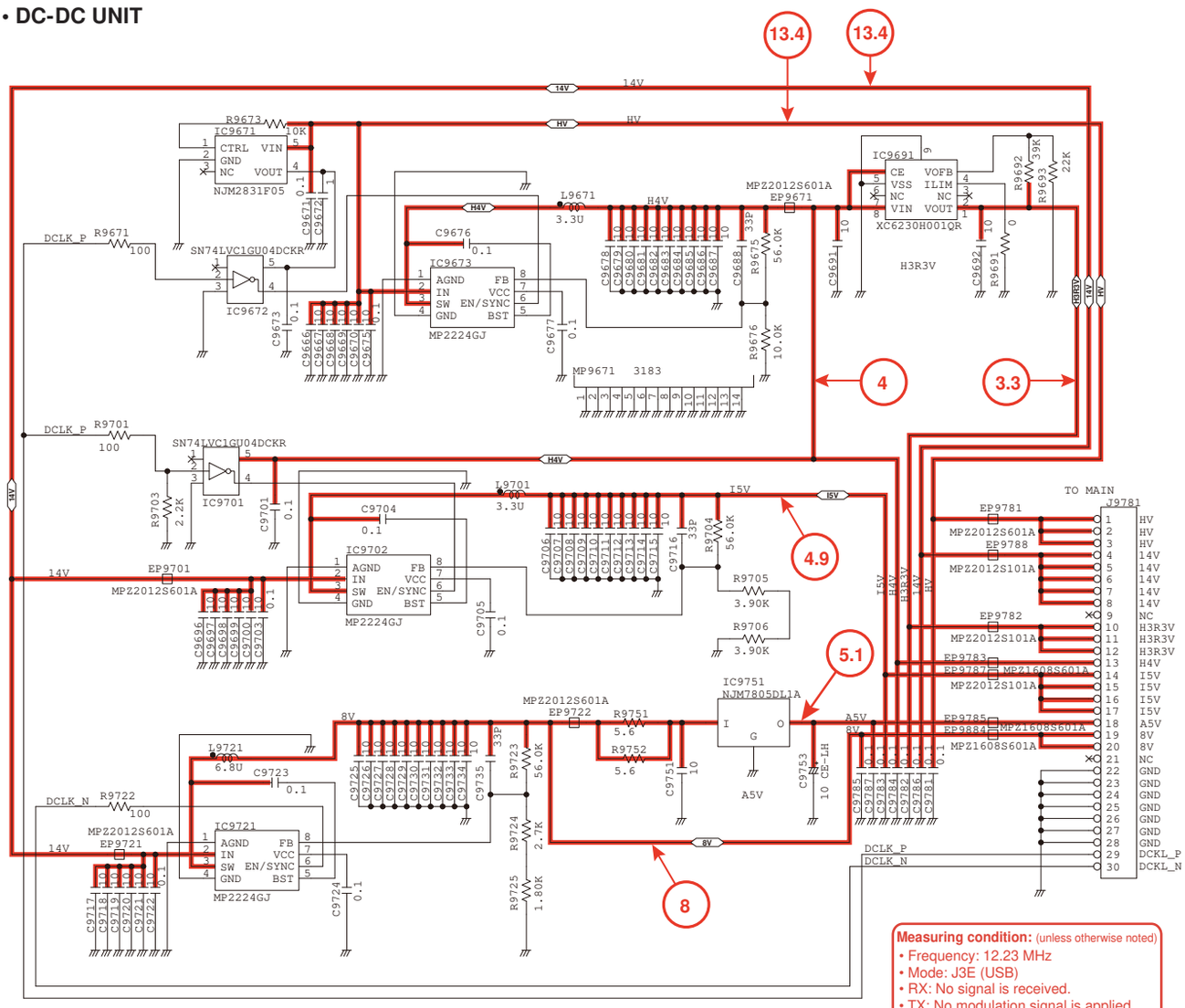
13.4
13.4
14V
HV
R9673
10K
IC9671
CTRL VIN
GND
NC VOUT
NJM2831F05
C9671
C9672
DCLK_P
R9671
100
SN74LVC1GU04DCKR
IC9672
C9673
C9666
C9667
C9668
C9669
C9670
C9675
H4V
L9671
3.3U
C9676
IC9673
AGND FB
IN VCC
SW EN/SYNC
GND BST
MP2224GJ
C9677
MP9671 3183
C9678
C9679
C9680
C9681
C9682
C9683
C9684
C9685
C9686
C9687
C9688
33P
R9675
56.0K
R9676
10.0K
MPZ2012S601A
EP9671
IC9691
CE VOFB
VSS ILIM
NC NC
VIN VOUT
XC6230H001QR
H3R3V
C9691
C9692
R9691
R9692
39K
R9693
22K
4
3.3
DCLK_P
R9701
100
SN74LVC1GU04DCKR
IC9701
R9703
2.2K
C9701
C9704
IC9702
MP2224GJ
L9701
3.3U
C9706
C9707
C9708
C9709
C9710
C9711
C9712
C9713
C9714
C9715
C9716
I5V
R9704
56.0K
4.9
R9705
3.90K
R9706
3.90K
C9705
14V
EP9701
MPZ2012S601A
C9696
C9697
C9698
C9699
C9700
C9703
TO MAIN
J9781
EP9781
MPZ2012S601A
EP9788
MPZ2012S101A
EP9782
MPZ2012S101A
EP9783
EP9787
MPZ1608S601A
MPZ2012S101A
EP9785
EP9884
MPZ1608S601A
MPZ1608S601A
5.1
IC9751
NJM7805DL1A
A5V
C9753
10 CE-1H
8V
MPZ2012S601A
EP9722
R9751
5.6
R9752
5.6
C9751
10
L9721
6.8U
C9723
DCLK_N
R9722
100
MPZ2012S601A
EP9721
IC9721
MP2224GJ
C9724
C9717
C9718
C9719
C9720
C9721
C9722
C9725
C9726
C9727
C9728
C9729
C9730
C9731
C9732
C9733
C9734
C9735
R9723
56.0K
R9724
2.7K
R9725
1.80K
8
DCLK_P
DCLK_N
Measuring condition: (unless otherwise noted)
• Frequency: 12.23 MHz
• Mode: J3E (USB)
• RX: No signal is received.
• TX: No modulation signal is applied.
(Waveforms are measured by an Oscilloscope.)
Digital tester setting:
Measuring Range | Input impedance
200 mV | 100 MΩ
2 V | 11 MΩ
20/200/1000 V | 10 MΩ
Voltage notation:
RX
TX
RX
Unit: Volt
Explanatory notes
TX Line
RX Line
Voltage Line

If you have any inquiries regarding service, contact your distributor. The contact number or E-mail address of your distributor can be found on our website.

https://www.icomjapan.com/

Count on us!

Icom Inc.
1-1-32, Kamiminami, Hirano-ku, Osaka 547-0003, Japan

S-15612XZ-C1
© 2020 Icom Inc.