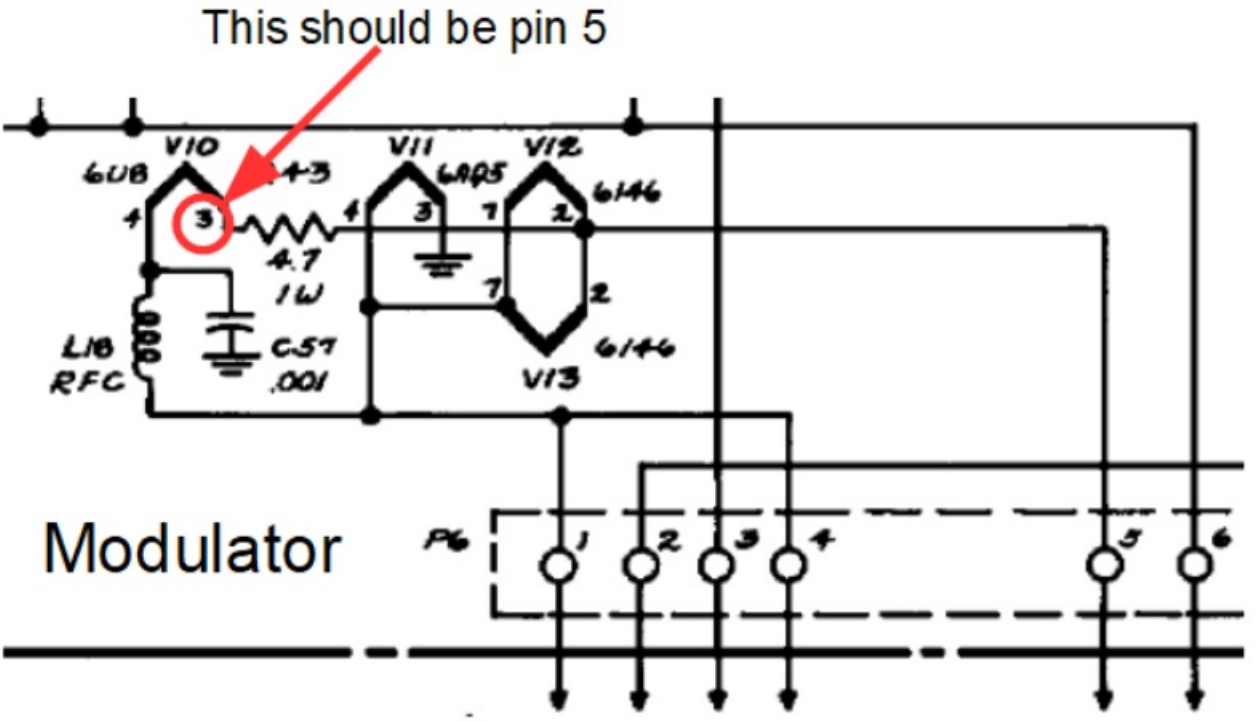
This should be pin 5
V10
6U8
V11
6AQ5
V12
6146
4.7
1W
L18
RFC
C57
.001
V13
6146
Modulator
P6