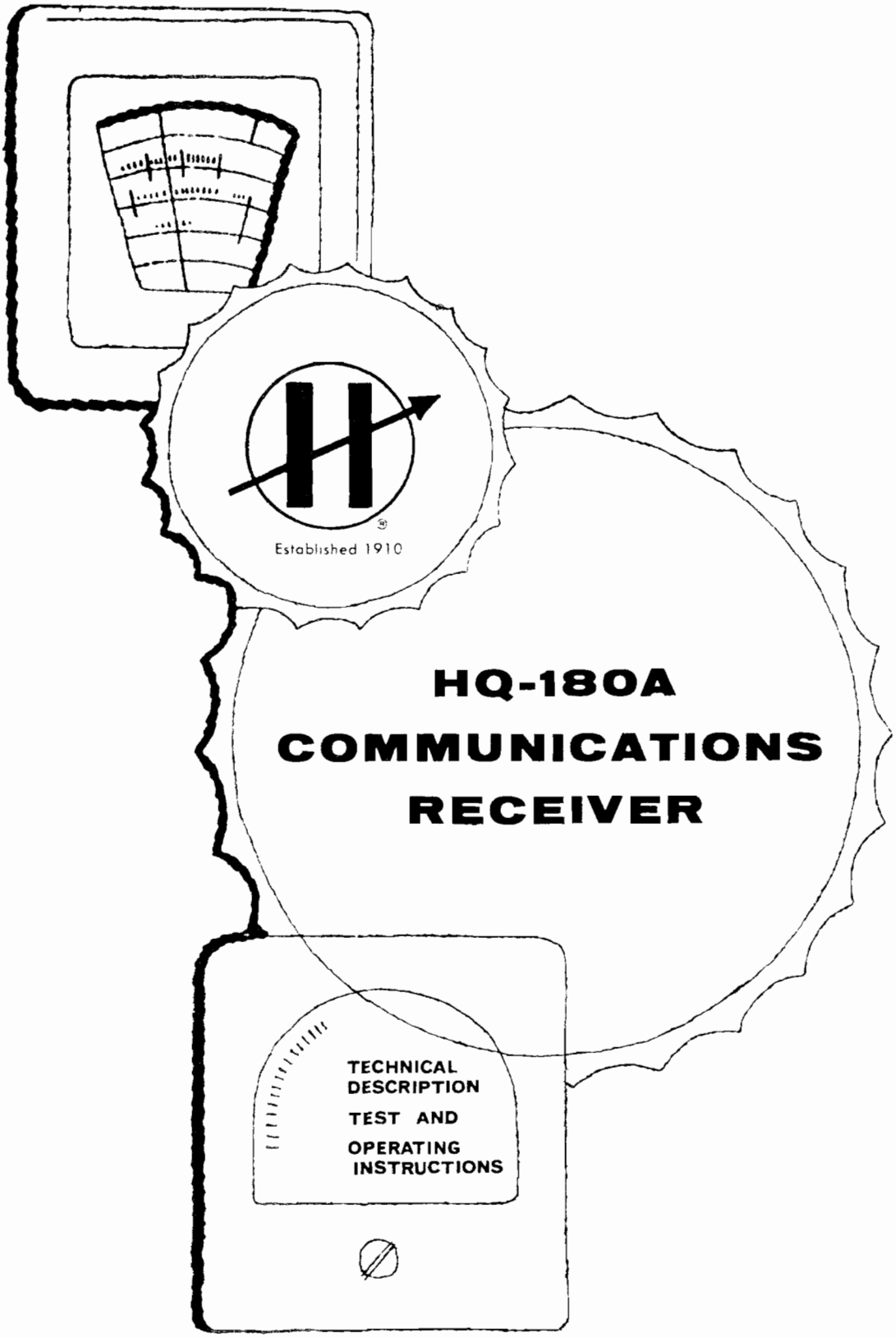

EAC HAMMARLUND

HQ-180A

COMMUNICATION RECEIVER

GENERAL COVERAGE
VERSATILITY
WITH UNEQUALLED
AMATEUR BANDSPREAD

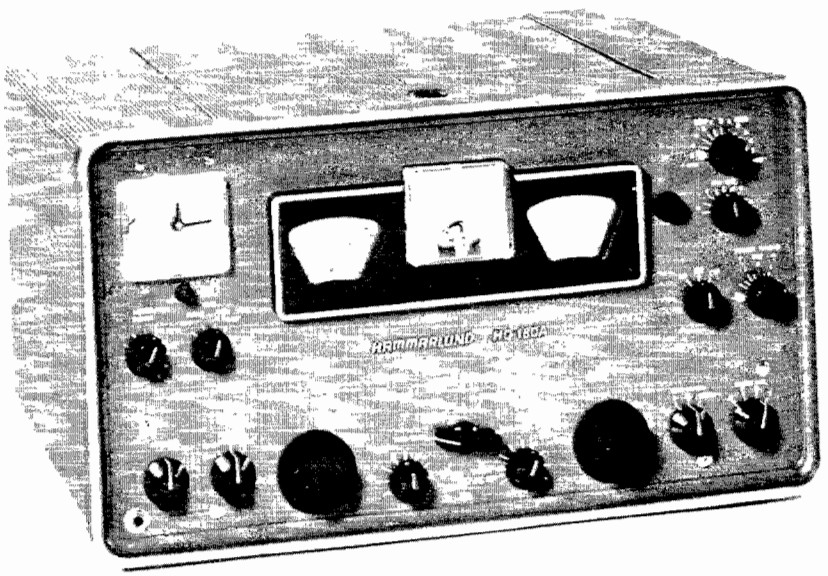

9001-06-00001
ISSUE 4
Feb. 1970

Established 1910

THE HAMMARLUND
MANUFACTURING COMPANY INCORPORATED
A Subsidiary of ELECTRONIC ASSISTANCE CORPORATION
73-88 HAMMARLUND DRIVE, MARS HILL, NORTH CAROLINA 28754
704-689-5411 / TWX 510-9353553 / CABLE. SUPERPRO-NEW YORK

INDUSTRIAL, AMATEUR, COMMERCIAL AND MILITARY COMMUNICATIONS EQUIPMENT / VARIABLE AIR CAPACITORS

TABLE OF CONTENTS

	TITLE	PAGE
SPECIFICATIONS		3
SECTION I	INSTALLATION	6
1.1	Unpacking	6
1.2	Receiver Connections	6
1.2.1	Antenna Connections	6
1.2.2	Speaker Connections	12
SECTION II	OPERATION	13
2.1	General	13
2.2	Operation of Controls	13
2.2.1	Clock Timer	13
2.2.2	Main Tuning Dial	13
2.2.3	"S" Meter	13
2.2.4	Bandspread Dial	14
2.2.5	Dial Calibration	14
2.2.6	Slot Frequency	14
2.2.7	BFO Tuning	14
2.2.8	Vernier Tuning	14
2.2.9	AM-SSB-CW	14
2.2.10	Selectivity	15
2.2.11	Sidebands	15
2.2.12	Bandspread Knob	15
2.2.13	RF Gain and AC Switch	15
2.2.14	Bandswitch	15
2.2.15	AF Gain	15
2.2.16	Main Tuning Knob	16
2.2.17	SEND-RECEIVE-CAL	16
2.2.18	Earphone Jack	16
2.2.19	Antenna	16
2.2.20	Noise Limiter	16
2.2.21	AVC	16
2.3	Tuning AM Signals	18
2.4	Tuning SSB Signals	18
2.5	Tuning CW Signals	19
2.6	Where to Listen	20
2.6.1	Shortwave Listening	20
2.6.2	Ham Radio	21
2.6.3	Citizen Band	22
2.6.4	Standard Frequency and Propagation Reports	22
SECTION III	CIRCUIT DESCRIPTION	24
3.1	General	24
3.2	HQ-180A	24
3.3	HQ-180-AX	25

	TITLE	PAGE
SECTION IV	SERVICE & MAINTENANCE	38
4.1	Maintenace	38
4.2	Circuit Description	38
4.3	General	38
4.4	Removing Receiver Chassis from the cabinet	39
4.5	Replacing Receiver Chassis in the cabinet	41
4.6	Removal of the Front Panel from the chassis	41
4.7	Alignment Procedure	47
4.8	IF Alignment	49
4.9	RF Alignment	51
4.10	"S" Meter Adjustment	54
PARTS LISTING		61
TABLE 1	Tube Socket Voltages	58
TABLE 2	Tube Socket Resistances	59
FIGURE 1	Rear Connections	7
FIGURE 2	Single Wire Antenna and Connections	8
FIGURE 3	Dipole Antenna and Connections	9
FIGURE 4	Accessory and System Socket Connections	10
FIGURE 5	Suggested Interconnections HX-50 HQ-180AX	11
FIGURE 6	Speaker Connections	12
FIGURE 7	Front View of Receiver	17
FIGURE 8	Block Diagrams	28
FIGURE 9	Slot Filter Response Curve	30
FIGURE 10	Detector BFO & Noise Limiter Circuits	32
FIGURE 11	AVC & "S" Meter Circuits	35
FIGURE 12	Auto-Response Curve	36
FIGURE 13	Auto-Response Circuit	37
FIGURE 14	Control Setting at start of Alignment	50
FIGURE 15	Bottom View of Receiver	55
FIGURE 16	Top View of Receiver	56
FIGURE 17	Tube Location Labels	57
FIGURE 18	Frequency Control Unit Diagram	60
FIGURE 19	Circuit Diagram of Receiver HQ-180-A	65
FIGURE 20	Circuit Diagram of Receiver HQ-180	67

HQ-180-A SPECIFICATIONS

FREQUENCY RANGE	540 kHz to 30 MHz in 6 bands
BANDSPREAD CALIBRATION ...	Dial markings every 5 kHz on 15, 20, 40 & 80 meter bands; every 10 kHz on 10 meter band plus arbitrary logging scale.
MAXIMUM AUDIO OUTPUT.....	1.0 Watt (Undistorted)
PASSBAND TUNING RANGE	± 3 kHz with 1 kHz calibration. 8:1 vernier tuning ratio.
OUTPUT IMPEDANCE	3.2 ohms (EIA Standard) plus 500 ohms.
AVC ACTION	Operates on RF and 3 IF stages. Provides better than .001 second attack time with 3 discharge rates: Fast = .01, Medium = .1 and Slow = 1 second delay. OFF position included.
ADJUSTABLE SELECTIVITY ...	6 DB bandwidths of .5, 1, 2 & 3 kHz
SELECTABLE SIDEBANDS	Upper, Lower and both. (Both position yields 2X selectivity)
SENSITIVITY	AM 1.5 uV or less produces 10:1 signal to noise ratio. CW/SSB .7 uV or less produces 10:1 signal to noise ratio.
ANTENNA INPUT	50 to 600 ohms, balanced or unbalanced.
ANTENNA COMPENSATOR	Permits compensation for loading effects of various type antennas or balanced transmission line.
BEAT FREQ. OSCILLATOR	Variable from Zero-beat to ± 2 kHz
SLOT FILTER	Frequency range ± 5 kHz of center frequency. Attenuation over range = 40 DB or greater. Calibrations every 1 kHz. Slot depth control (internally mounted) provides additional 20 DB. 8:1 Vernier tuning ratio.

TUBE COMPLEMENT	RF Amplifier	6BZ6
	1st Mixer	6BE6
	HF Oscillator	6C4
	2nd Mixer/Osc.	6BE6
	455 kHz Gate	6BA6
	455 kHz IF Amp.	6BA6
	3rd. Mixer/VFO	6BE6
	60 kHz IF Amp.	6BA6
	60 kHz IF Amp.	6BA6
	Crystal Cal.	6BZ6
	60 kHz IF Amp. & AVC-AM Det	6BV8
	SSB Prod. Det.	12AU7
	Noise Limiter	6AL5
	BFO & S Meter Amp.	12AU7
	1st. Audio Amp. & Delayed AVC Clamp	6AV6
	Audio Pwr. Output	6AQ5
	Voltage Regulator	OA2
	Crystal Osc. (AX Models)	6CW4

SEMICONDUCTOR COMPLEMENT ..... Two Diodes, CER-72-C. 800 PIV @ ½ Amp.

"S" METER..... Calibrated 1 to 9 in 6 DB steps (Approx.) also includes a DB scale from S-9 to +40. Meter deflects on all signals.

NOISE LIMITER..... Adjustable series type provides both positive and negative clipping.

POWER SUPPLY ..... 115 - 230 Volts, 50 - 60 Hz. 120 Watts power consumption.

FRONT PANEL EQUIPMENT

Main Tuning
Slot Frequency
Bandspread Tuning
BFO kHz (CW Pitch)
Vernier Tuning
Noise Limiter
RF Gain - ON/OFF
AVC: OFF, SLOW, MED, FAST
Selectivity - .5, 1, 2, 3 kHz per sideband
SEND - RECEIVE - CALIBRATE

	Phone Jack Sidebands: Upper, Lower, Both "S" Meter Dial Scale Reset AF Gain Tuning Range (Bands) Antenna Compensator AM-SSB-CW
REAR PANEL EQUIPMENT.....	Speaker and Line Terminals "S " Meter Controls Accessory Socket Fuse System Socket Antenna Terminals
DIMENSIONS.....	10 1/2 High, 19 Wide, 13 Deep. Weight -38 lbs.
HQ-180-AX	Universal Model of the HQ-180-A Receiver with provisions for 11 fixed-frequency crystal controlled channels. Six of the crystals are easily interchangeable from the front panel, the balance are located within the cabinet but are readily accessible from the trap-door top. A 3 kHz vernier tuning control permits compensation for minor frequency variations of the crystals.
24 HOUR CLOCK TIMER	Combination clock and automatic timer. Aids in meeting prearranged schedules. (Optional Extra)

SECTION I INSTALLATION

1.1 UNPACKING

Immediately after receipt of the receiver it should be removed from the shipping carton and visually inspected to insure that it has not been damaged in shipment. If it is determined that the receiver has been damaged in transit the shipping carton and packing material should be saved and the transportation company notified immediately.

As part of the initial inspection all of the front panel controls should be checked to insure their proper mechanical operation. It is advisable to generally, "look the receiver over" and verify that nothing has been shaken loose and that everything appears to be normal.

The following item is supplied with each receiver:

1. Instruction Manual, Hammarlund # 9001-06-00001, quantity 1.

1.2 RECEIVER CONNECTIONS

If the HQ-180A Receiver is to be used for receiving only and not as part of a system with interconnections to an associated transmitter there are only a few required connections. These connections are easily accessible at the rear of the receiver and their design permits permanent connections to be made in a neat manner. Figure 1 illustrates the connection points at the rear of the receiver.

1.2.1 ANTENNA CONNECTIONS

The HQ-180A is designed to operate with a single wire or a balanced type antenna. The front panel antenna trimmer control permits a good match to most antenna systems of 50 to 600 ohms impedance.

For general coverage, single wire antenna of 20 to 50 feet in length will provide surprisingly good reception. A long single wire outdoor antenna, such as shown in Figure 2, will generally provide satisfactory performance. This wire may be 50 to 150 feet long.

For best reception, the antenna should be isolated as much as possible from neighboring objects and at right angles to power lines or busy highways so as to minimize possible interference pickup.

Optimum performance on a particular amateur band or other narrow tuning range will be obtained by using a tuned halfwave dipole or folded dipole fed with 300 ohm transmission line or other suitable lead-in, as shown in Figure 3.

To tune the halfwave length dipole, the following formula for the length of the dipole may be used:

$$\text{Length in feet} = \frac{468}{\text{Freq. in MHz}}$$

Each side is half the length found from the above formula.

A good ground will generally aid in reception and reduce stray line hum. Reversal of polarity of the power cord plug may possibly further reduce line hum in some locations.

To obtain the best results from the receiver, the antenna that most nearly suits your needs should be selected. The illustrations shown in Figures 2 and 3 are typical antenna installations.

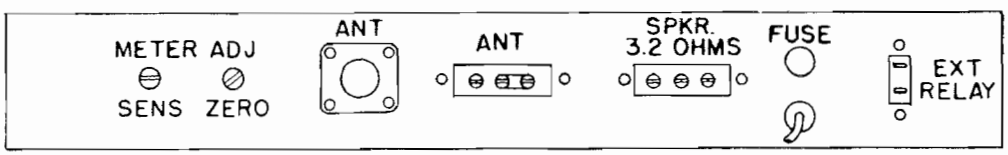

HQ-180 SERIES

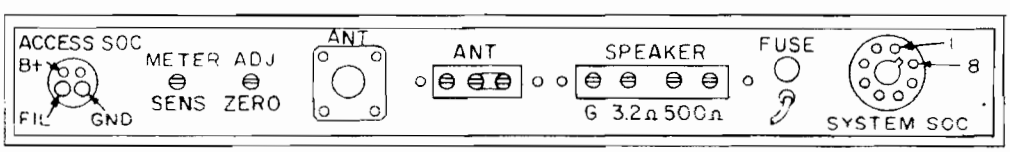

HQ-180A SERIES

REAR CONNECTIONS

FIG. 1

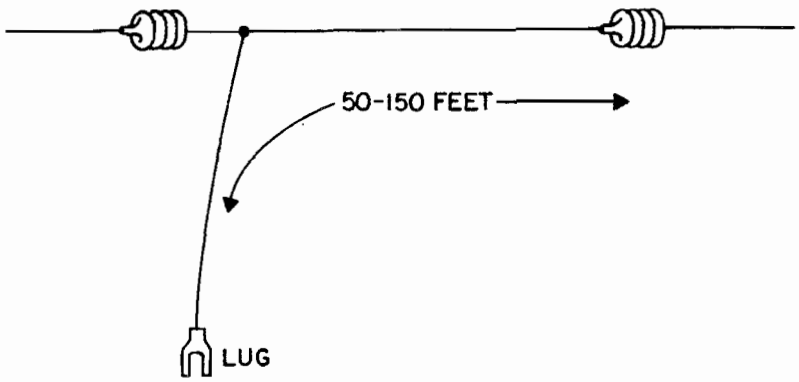

SINGLE WIRE ANTENNA

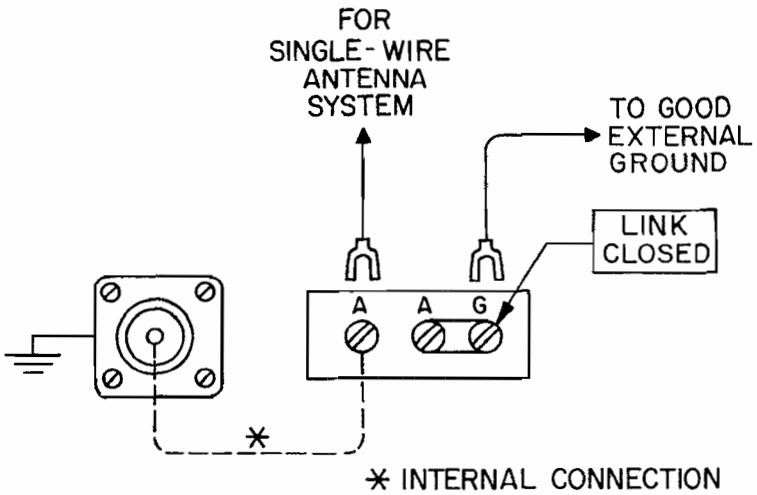

ANTENNA CONNECTIONS FOR SINGLE WIRE ANTENNA

FIG. 2

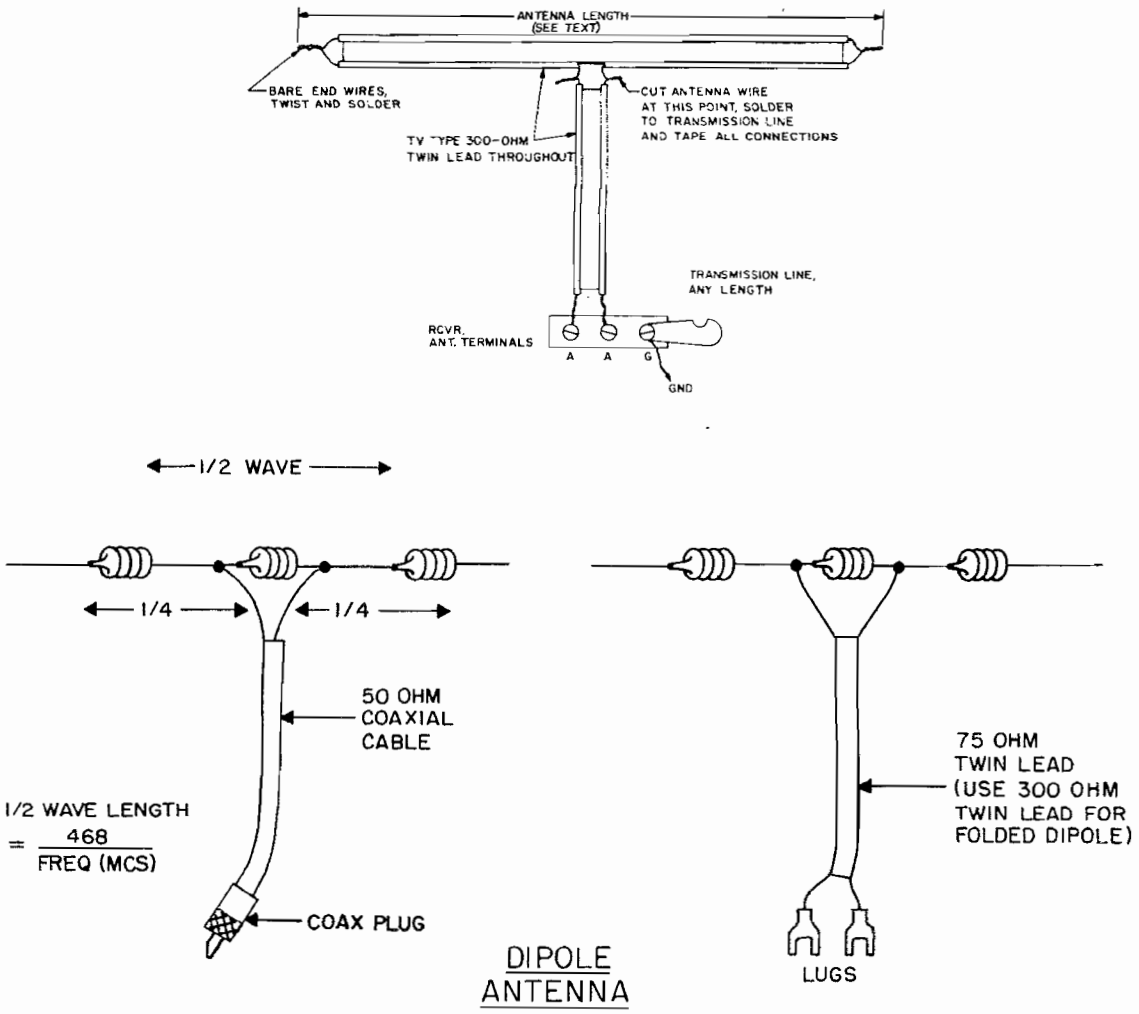

DIPOLE ANTENNA

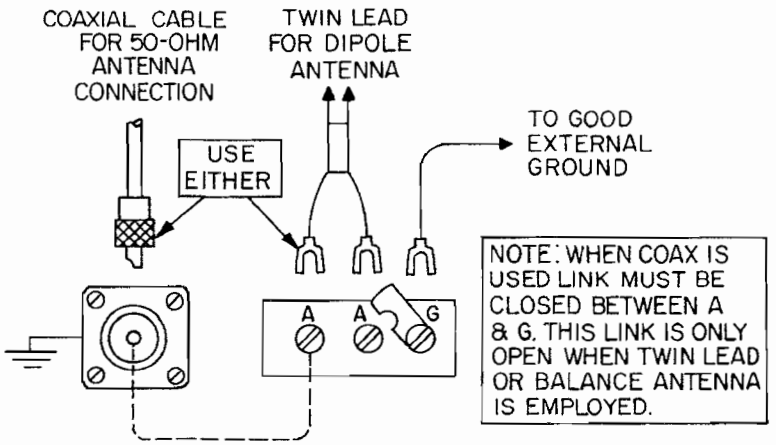

ANTENNA CONNECTIONS FOR DIPOLE ANTENNA

FIG. 3

Using 6 and 2 meter converters with the HQ-180-A Receiver

When building or purchasing a converter for 6 or 2 meters, we recommend using an IF frequency of 10.0 to 14.0 MHz. In the HQ-180-A Receiver the accessory socket may be used for convenience in supplying power to the converter. Consult the Accessory Socket Connections Diagram for the proper plug wiring.

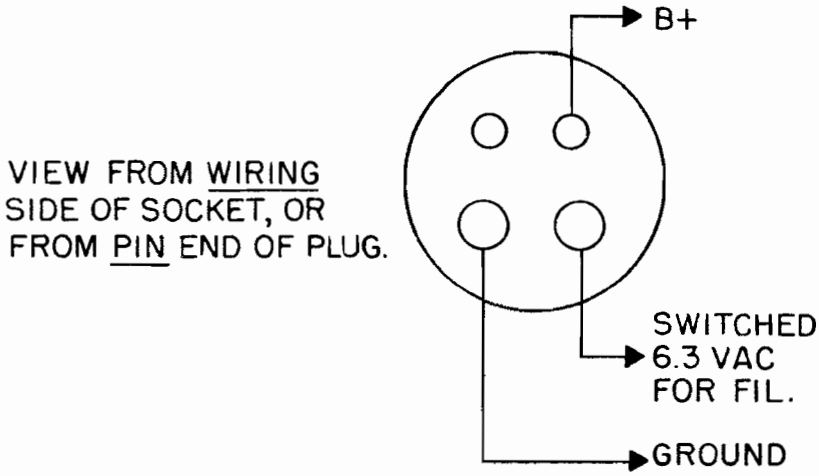

ACCESSORY SOCKET CONNECTIONS

The system socket connections provide for a variety of uses, depending upon the transmitter system installed. (Compatibility with Hammarlund HX-50 or HX-500 Transmitters included. See their instruction manuals for details.)

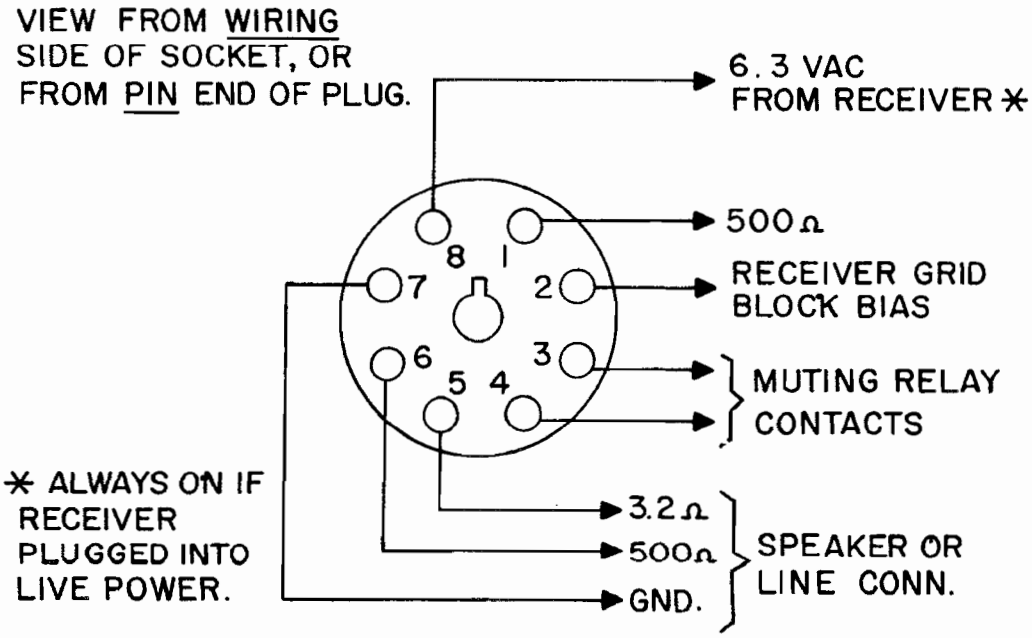

FIG. 4 SYSTEM SOCKET CONNECTIONS

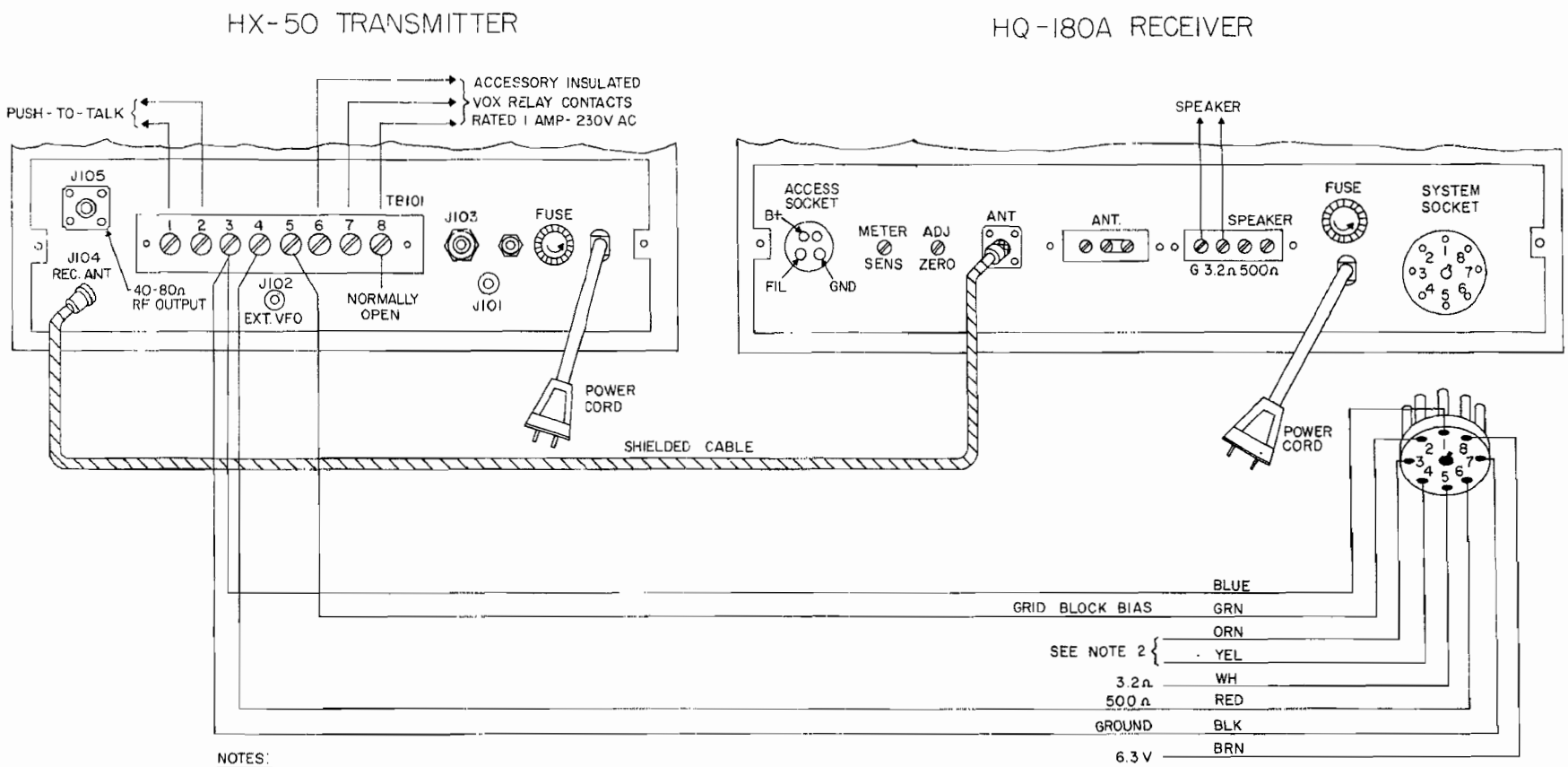

NOTES:

1. HOOK-UP SHOWN IS USING GRID BLOCK BIAS TO THE HQ-180-A
2. IF RELAY SWITCHING IS DESIRED
   a. DISCONNECT GRID BLOCK BIAS (GREEN LEAD) FROM PIN 5 OF TB101
   b. WIRE ORANGE LEAD TO PIN 7 AND YELLOW LEAD TO PIN 6
3. IF GRID BLOCK BIAS IS USED, RELAY CONTACTS PINS 6 & 7 ON HX-50 MAY BE USED FOR OTHER FUNCTIONS. THESE ARE NORMALLY CLOSED.
4. WHEN USING VOX CONTROL OF THE HX-50 TRANSMITTER, PIN NO. 1 OF THE HQ-180A OR HQ180AX RECEIVERS SYSTEM SOCKET SHOULD BE CONNECTED TO PIN NO. 3 OF HX-50 TERMINAL BOARD AS SHOWN IN DIAGRAM.

SUGGESTED INTERCONNECTIONS
(HX-50 HQ-180A)

FIG. 5

1.2.2 SPEAKER CONNECTIONS

Connect a 3.2 ohm permanent magnet dynamic speaker to the two terminals marked G and 3.2 Ω on the rear of the chassis. (Figure 6) For best performance do not place the speaker on top of the receiver cabinet.

HEADPHONES

High impedance magnetic phones will usually be found satisfactory when the headphone jack is employed. The phones are deliberately mismatched to reduce the level into them. If more level or volume is desirable, low impedance phones may be employed. These may be any of the popular impedances such as 8, 16 or 24 ohms. If you do not have headphones and desire to purchase a pair, the low impedance type is suggested since it will always be possible to reduce the volume by making use of the audio volume control.

Another alternative, if high impedance phones are available, is to permanently connect these to the 500 ohm line output terminals on the rear of the receiver. These will provide more volume than the headphone jack since the headphone jack impedance is 3.2 ohms or the same as the speaker.

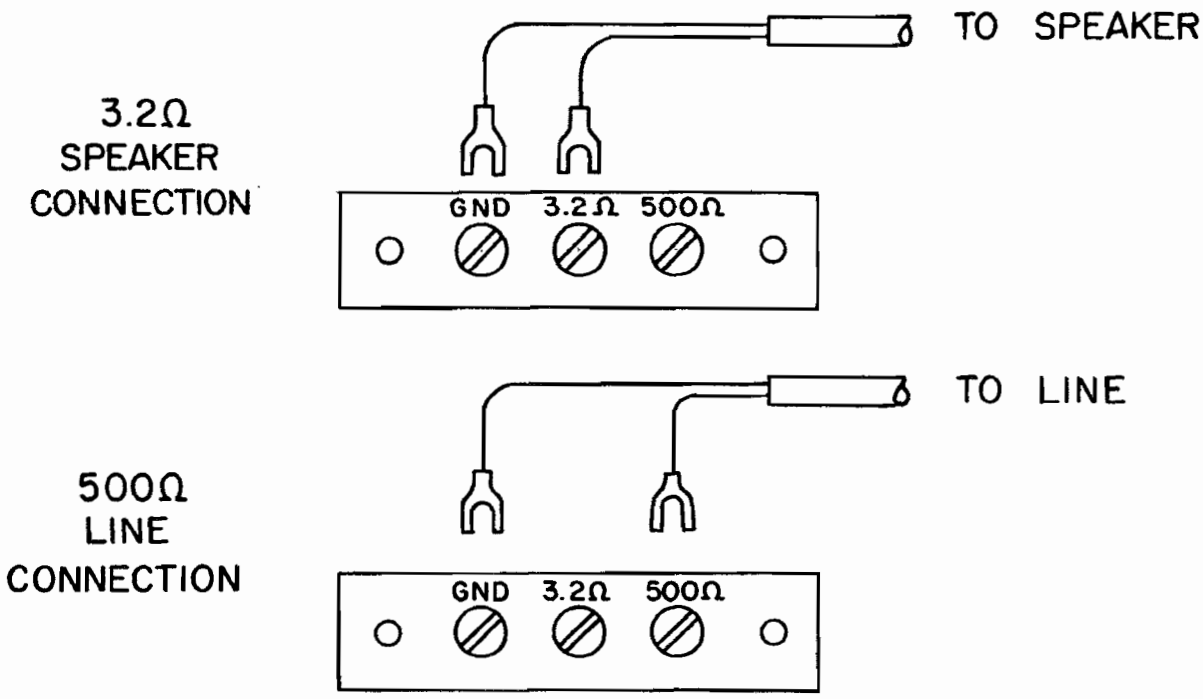

FIG. 6

SECTION II OPERATION

2.1 GENERAL

With the receiver installed as suggested in Section I it is now ready to receive signals. This section is intended as an aid to operate the receiver in a manner that will produce the best audible signal possible. A brief description of each of the front panel controls is followed by detailed instructions for tuning AM, CW and SSB signals.

2.2 OPERATION OF CONTROLS

The index numbers referred to in this section are taken from Figure 7, unless otherwise noted.

2.2.1 CLOCK TIMER (INDEX # 1)

Optional equipment, if installed, must be in "ON" position for receiver to operate. When in the "AUTO" position, with AC switch "ON" (RF Gain control), the receiver will turn on when the clock reaches the preset time. To adjust time, open lid, pull knob towards rear and set hands; to set "AUTO" control, push knob towards front and set the small red hand. Once turned on by the auto timer, the set must be turned off by the clock knob before resetting.

2.2.2 MAIN TUNING DIAL (INDEX # 2)

The main tuning dial is used to indicate the received frequency. It is only accurate when the bandspread dial is set at 100 on the logging scale. The dial contains a separate scale for each band and where applicable, these scales are provided with a marker at the high frequency end of the amateur bands.

2.2.3 "S" METER (INDEX # 3)

The "S" Meter is used to indicate a relative level of signal strength. The meter will operate only when the AVC is on. The meter scale is calibrated to 40 DB above S-9 and is factory calibrated so a signal of approximately 50 uV reads S-9. Each "S" unit indicates approximately a 6 DB change equivalent to doubling or halving the signal strength. The "S" Meter is extremely effective on SSB and CW when using slow AVC.

2.2.4 BANDSPREAD DIAL (INDEX # 4)

The bandspread dial is used to indicate the received frequency in conjunction with the main tuning dial. This dial is used when it is desired to spread out a small portion of the main dial. The main dial is set at the upper frequency end of the section to be spread out and the bandspread dial is tuned down in frequency from 100 to 0.

2.2.5 DIAL CALIBRATION (INDEX # 5)

This control is a small knob which moves the hairline over the bandspread dial in order to calibrate the receiver with the crystal calibrator.

2.2.6 SLOT FREQUENCY (INDEX # 6)

The slot frequency knob controls the 40 to 60 DB notch. When this control is at the "O" point, or straight up, the notch is directly in the middle of the passband and will reduce the received signal by 40 to 60 DB. When it is at either +5 or -5 it will not have any effect on the received signal. If an interfering signal were to be heard at +2 kHz, the slot frequency knob should be moved to that point and the interfering signal would then be reduced by 40 DB or more. As the slot approaches the center of the passband it will begin to effect the desired signal until the desired signal is reduced to uselessness. Judicious use of this control is advised.

2.2.7 BFO TUNING (INDEX # 7)

This control is used to vary the beat note frequency to a comfortable pitch when using the receiver on the CW mode. The normal position is straight up, or "O".

2.2.8 VERNIER TUNING (INDEX # 8)

The vernier tuning control is used for fine frequency adjustment when tuning SSB signals. It is a bandspread control for the second conversion oscillator.

2.2.9 AM-SSB-CW (INDEX # 9)

This control selects the type of signals the receiver will tune. It directs the output of the IF amplifiers to the proper detector for the type of signal being received and controls the operation of the BFO.

2.2.10 SELECTIVITY (INDEX # 10)

This control selects different bandwidths for the signal being received. There are four settings, .5, 1, 2 or 3 kHz. Used in conjunction with the sideband switch, the .5 kHz position is usually used for CW operation with the sideband switch in the both position. The 1 kHz position sometimes gives better pitch to the CW note. The 2 and 3 kHz positions are used for SSB reception with the sideband switch in the upper or lower position. The 3 kHz position is used for AM reception, the sideband switch should be in both for best fidelity.

2.2.11 SIDEBANDS (INDEX # 11)

This control switches components across the 60 kHz IF transformers in order to tune the IF response to the upper, lower or both sidebands. It is used in conjunction with the selectivity control (INDEX # 10) as explained in Paragraph 2.2.10 above.

2.2.12 BANDSPREAD KNOB (INDEX # 12)

This control drives the bandspread dial (INDEX # 4) which drives the bandspread capacitor as explained in 2.2.4.

2.2.13 RF GAIN AND AC SWITCH (INDEX # 13)

At the extreme counterclockwise position this control operates the AC ON/OFF switch. As the control is advanced in the clockwise direction it reduces the bias on the RF amplifier and thereby increases the sensitivity of the receiver. The control also affects the sensitivity of the 455 kHz IF section.

2.2.14 BANDSWITCH (INDEX # 14)

The bandswitch changes the tuned circuits in the grid circuits of the RF amplifier, the first mixer and the HF oscillator. It also changes the conversion scheme where required.

2.2.15 AF GAIN (INDEX # 15)

The AF gain control sets the level of the audio from the output of the detectors and noise limiter into the audio amplifying section.

2.2.16 MAIN TUNING KNOB (INDEX # 16)

This control drives the main dial (INDEX # 2) which drives the main tuning capacitors as explained in Section 2.2.2.

2.2.17 SEND-RECEIVE-CAL (INDEX # 17)

This control is used to silence the receiver while transmitting. The same function is available at the systems socket, J1. A relay operated by the transmitter, with contacts that open when the transmitter is keyed, will silence the receiver. The switch must be left in the SEND position and the relay connected to pins 3 and 4 of J1. An additional function of this control is to turn the calibration oscillator on when it is required.

2.2.18 EARPHONE JACK (INDEX # 18)

This jack is designed to accept a standard headphone plug. When it is inserted the jack opens the speaker circuit. If both a speaker and earphones are desired, a pair of high impedance earphones may be connected across the 500 ohm output on the rear of the receiver. (Not available on older HQ-180 Receivers.)

2.2.19 ANTENNA (INDEX # 19)

The antenna control is connected across the antenna coils and serves to peak the coil in use for best match to the antenna. It has a range of 50 to 600 ohms, balanced or unbalanced.

2.2.20 NOISE LIMITER (INDEX # 20)

The noise limiter is adjustable and acts to reduce the noise peaks, reducing them as the control is advanced in a clockwise direction. If advanced too far, the control will also reduce the received audio. Set this control for reduction of interfering noise just before it starts reducing the audio level.

2.2.21 AVC (INDEX # 21)

This four position switch permits selection of "OFF" or three decay times for optimum results on different types of signals.

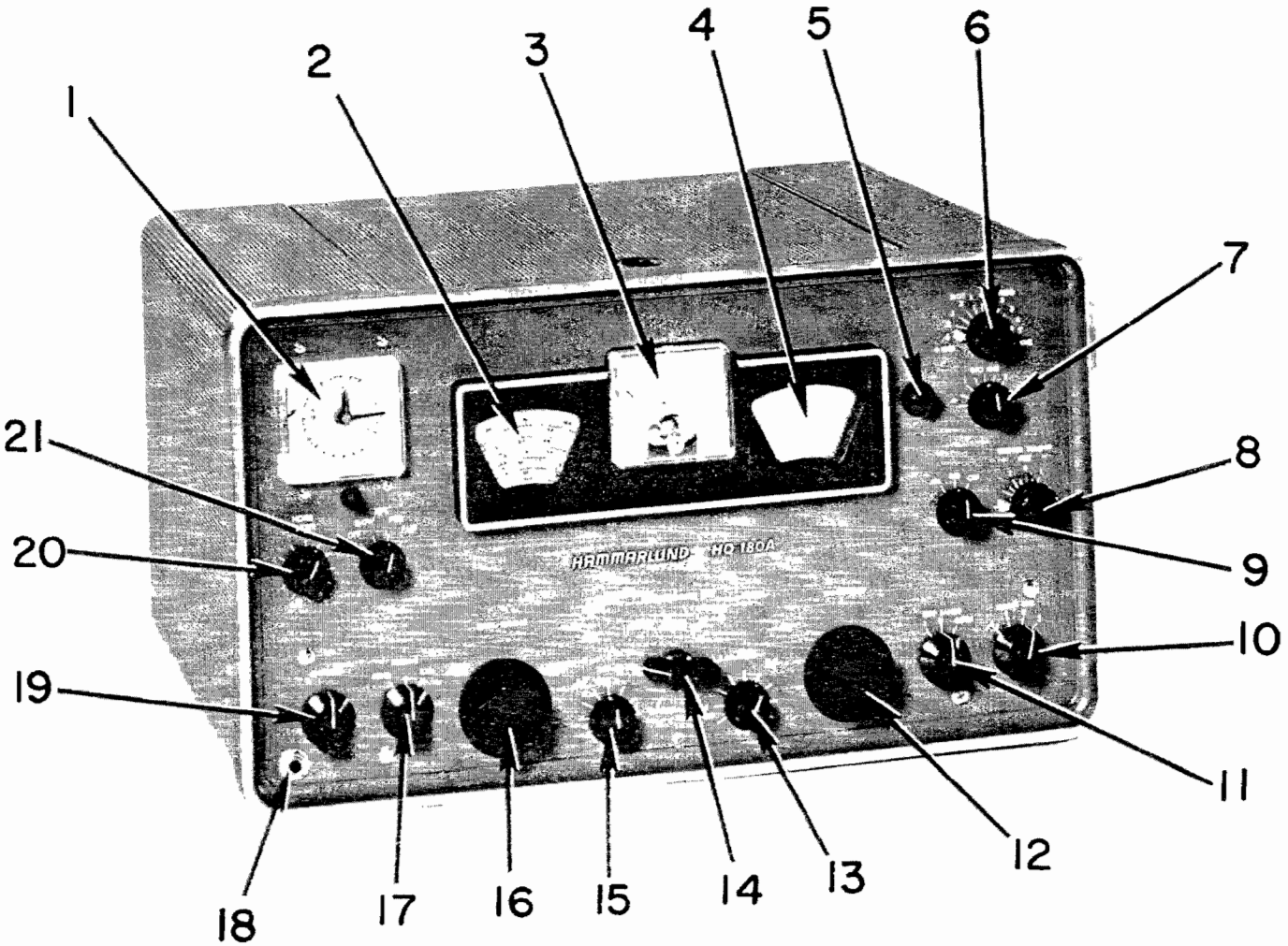

1. Clock Timer
2. Main Tuning Dial
3. "S" Meter
4. Band Spread Dial
5. Dial Calibration
6. "SLOT FREQ" Control
7. "BFO" Control
8. "VERNIER TUNING" Control
9. "AM-SSB-CW" Switch
10. "SELECT" Control
11. "SIDE BANDS" Control
12. "BAND SPREAD" Control
13. "RF" Gain & 'AC" Switch
14. "TUNING RANGE" Control
15. "AF" Gain Control
16. "MAIN TUNING" Control
17. "SEND" "RECEIVE" "CAL" Switch
18. Earphone Jack
19. "ANTENNA" Control
20. "NOISE LIMITER" Control
21. "AVC" Switch

FRONT VIEW OF RECEIVER

FIG. 7

2.3 TUNING AM SIGNALS

When tuning AM signals the controls should be set or manipulated as described below:

2.2.1	Clock Timer	ON
2.2.6	Slot Frequency	± 5
2.2.7	BFO	0
2.2.8	Vernier Tuning	0
2.2.9	AM-SSB-CW	AM
2.2.10	Selectivity	3
2.2.11	Sideband	Both
2.2.13	RF Gain	Max
2.2.17	SEND-RECEIVE-CAL	RECEIVE
2.2.21	AVC	Slow

Set the main tuning dial to the frequency desired, set the band-spread dial to 100 on the logging scale, set the bandswitch to the band desired, set the AF gain to a comfortable listening level, peak the received signal with the antenna control and set the noise limiter to a point just below that which reduces the audio level. Use the "S" meter to indicate the maximum signal when tuning the main tuning dial and peaking the antenna.

2.4 TUNING SSB SIGNALS

When tuning SSB signals the controls should be set or manipulated as described below:

2.2.1	Clock Timer	ON
2.2.6	Slot Frequency	± 5
2.2.7	BFO	0
2.2.8	Vernier Tuning	0
2.2.9	AM-SSB-CW	SSB
2.2.10	Selectivity	2
2.2.11	Sideband	U or L
2.2.15	AF Gain	MAX
2.2.17	SEND-RECEIVE-CAL	RECEIVE
2.2.21	AVC	Slow

NOTE: The accepted, most popular transmission of amateur SSB signals is as follows:

BAND	FREQUENCY	SIDEBAND
80 Meters	3.8 - 4.0 MHz	Lower
40 Meters	7.2 - 7.3 MHz	Lower
20 Meters	14.2 - 14.35 MHz	Upper
15 Meters	21.25 - 21.45 MHz	Upper
10 Meters	28.5 - 29.7 MHz	Upper

Set the main tuning dial to the frequency desired, set the bandspread dial to 100 on the logging scale, set the RF gain to a comfortable listening level, set the bandswitch to the band desired, peak the received signal with the antenna control and set the noise limiter to a point just below that which reduces the audio level. Use the "S" meter to indicate the maximum signal when tuning the main tuning dial and peaking the antenna.

2.5 TUNING CW SIGNALS

When tuning CW signals the controls should be set or manipulated as described below:

2.2.1	Clock Timer	On
2.2.6	Slot Frequency	± 5
2.2.7	BFO	0
2.2.8	Vernier Tuning	0
2.2.9	AM-SSB-CW	CW
2.2.10	Selectivity	1
2.2.11	Sideband	Both
2.2.15	AF Gain	MAX
2.2.17	SEND-RECEIVE-CAL	RECEIVE
2.2.21	AVC	Slow

Set the main tuning dial to the frequency desired, set the bandspread dial to 100 on the logging scale, set the RF gain to a comfortable listening level, set the bandswitch to the band desired, peak the received signal with the antenna control and set the noise limiter to a point just below that which reduces the audio level. Use the "S" meter to indicate the maximum signal when tuning the main tuning dial and peaking the antenna.

2.6 WHERE TO LISTEN

Where you will want to listen will depend on your own personal interests. The following paragraphs are intended to aid the shortwave listener, the radio amateur and those persons interested in the citizen bands.

2.6.1 SHORTWAVE LISTENING

There are 7 major bands in which stations may be found that broadcast from all parts of the world. Here you will hear the voices of London, Paris, Rome, Moscow, etc. Experience and practice will soon lead you to the proper band at the proper time of day but until you have become familiar with the routine, here is a listing that will help you to get started.

INTERNATION SHORT-WAVE BROADCAST BANDS

Meters	Frequency Range
49	5950-6200 kHz
41	7100-7300 kHz
31	9200-9700 kHz
25	11700-11975 kHz
19	15100-15450 kHz
16	17700-17900 kHz
13	21450-21750 kHz

WHEN TO LISTEN ..... FROM THE UNITED STATES

6 AM to Noon — Direction of Shortwave stations

16 meters	EAST
19, 25 & 49 meters	EAST, NORTHEAST & SOUTHWEST

Noon to Dark

16 meters	EAST, Turning SOUTH in late afternoon
19 & 25 meters	EAST and SOUTH
31 meters	EAST
49 meters	Inconsistent

6 PM to Midnight

16, 19, 25 & 31 meters.....	Poor reception, stations from EAST fade around midnight and SOUTH becomes strongest.
49 meters	Strongest from EAST, NORTH and SOUTH usually good.

In general, the higher the sun, the higher the frequency of best reception. For good year-round listening the 31 and 25 meter bands produce the most stations. In winter the lower frequencies are best, in summer the higher frequencies are best. Sun spots have a direct relationship to receiving conditions. They operate on an 11 year cycle. As the number of sun spots increase, conditions improve on the higher frequencies. The 13 and 16 meter bands will get better and better from 1969 on.

2.6.2 HAM RADIO

Various segments of the radio spectrum have been set aside for use by radio amateurs or "HAMS" who are licensed by the Federal Communications Commission to operate their own radio transmitters. Communicating across thousands of miles of land and sea and international borders, the chatter of thousands of hams around the world fills the air at all hours of the day and night.

Conversations are often technical in nature but there is plenty of interesting "Rag-Chewing" or general conversation. Hams often provide emergency communications in disaster areas using portable and vehicle mounted equipment.

The amateur frequencies you will find on your Hammarlund receiver are listed below:

Meters	Frequency in kHz
160	1800-2000
80	3500-4000
40	7000-7300
20	14000-14350
15	21000-21450
10	28000-29700

NOTE: Effective 11-22-69 there have been some FCC changes in frequency allocations for the various classes of licensee. CW is permitted on all of the frequencies in a given band while AM and SSB are restricted to certain portion of the band.
160 meters is shared with navigational aids and is segmented into portions.

2.6.3 CITIZEN BAND

A recent addition to private communication is the Citizens Band of frequencies, set up by the FCC for short range business and personal communications. It consists of 23 channels between 26.965 and 27.255 kHz. They are located as follows:

CH.	FREQ. (kHz)	CH.	FREQ. (kHz)	CH.	FREQ. (kHz)
1	26965	9	27065	17	27165
2	26975	10	27075	18	27175
3	26985	11	27085	19	27185
4	27005	12	27105	20	27205
5	27015	13	27115	21	27215
6	27025	14	27125	22	27225
7	27035	15	27135	23	27255
8	27055	16	27155		

2.6.4 STANDARD FREQUENCY AND PROPAGATION REPORTS

Stations broadcasting standard frequencies, accurate time signals and propagation reports are listed below:

CALL	FREQUENCIES (MHz)	LOCATION	NOTES
WWV	2.5, 5, 10, 15, 20 & 25	Ft. Collins, Col.	*, Time every 5th. minute
WWVH	5, 10 & 15	Hawaii	*, Time every 5th. minute
CHU	3.33, 7.335 & 14.67	Ottawa, Canada	Time every minute
JJY	2.5, 4, 5, 8, 10 & 15	Tokyo, Japan	

* Propagation reports broadcast as follows: WWV, North Atlantic path; WWVH, North Pacific path; Forecast occurs during the last half of every fifth minute in Morse Code.

W	(.--)	=	Disturbance in progress or expected
U	(..-)	=	Unstable conditions
N	(-.)	=	No warning

The code letter above will be followed by a number which gives the quality of the report.

1	(.----)	Impossible	6	(-....)	Fair to Good
2	(..---)	Very poor	7	(--...)	Good
3	(...--)	Poor	8	(---..)	Very Good
4	(....-)	Fair to Poor	9	(----.)	Excellent
5	(.....)	Fair			

SECTION III CIRCUIT DESCRIPTION

3.1 GENERAL

The complete circuitry of the HQ-180-A is shown in the schematic diagrams included at the end of this book. To help in understanding these diagrams, a block diagram is presented as Figure 8. While reading the text, follow both the block diagram and schematic diagram --- one will illustrate the overall system, while the other will provide all of the connection details.

3.2 HQ-180-A

The HQ-180-A differs from the HQ-180 in the following respects:

3.2.1 The power supply is designed for 115/230 V. 50, 60 cycle AC operation. This applies to the power transformer T-18 and the new filament transformer T22.

3.2.2 A separate filament transformer is employed, T-22 in the schematic diagram. This transformer provides 24 hour-a-day operation of the heaters of the high frequency oscillator and first converter, to reduce initial warm up drift. In addition, this transformer also supplies the systems socket which is a new added feature. If the receiver is not to be operated for long periods (upwards of 3 days) the line cord should be removed from the socket.

3.2.3 An accessory socket plus a systems socket has been added. The accessory socket may be used to power most 6 and 2 meter converters. The systems socket will be found convenient when the HQ-180-A Receiver is employed in conjunction with a transmitter, since all of the necessary VOX anti-trip and/or relay connections are available from this socket. This also provides a rapid disconnect without the need of tools once the installation has been completed properly.

3.2.4 A three (3) position BFO switch is provided enabling the BFO to be in the OFF position, SSB, where the BFO is fixed for optimum SSB audio response with reference to the passband. The CW position enables the BFO to be adjusted plus or minus 2 kHz thus providing the usual pitch control adjustment. For CW reception, the BFO should always be set plus or minus 500 cycles to 1000 cycles especially in the .5 kHz selectivity position so as to prevent detuning of the desired signal for the desired pitch.

3.2.5 3.2 ohms and 500 ohms output terminations are now provided for voice coil or line operation. The 500 ohm line termination will be found very advantageous for phone patch and improved anti trip operation of most VOX circuits.

3.2.6 The 5U4G tube formerly used in the HQ-180 has now been replaced with two (2) silicon diode rectifiers thus providing cooler operation and better regulation from the power supply.

3.3 HQ-180-AX

The HQ-180-AX Receiver provides an eleven (11) position fixed frequency crystal oscillator assembly which is factory installed in the panel space provided for the 24 hour clock timer. The knob allows selection of normal variable frequency tuning or any one of eleven fixed frequencies crystal controlled. Six crystals are mounted on the front plate of the oscillator assembly and may be changed quite readily to shift frequencies. The remaining five crystals are mounted behind the front panel on the oscillator box and may be changed by lifting the top cover of the cabinet. It is intended that the five inside crystals will be for commonly used channels not subject to being changed very often. The receiver can be zeroed into the channel frequency by manipulating the vernier tuning control on the front panel. This will correct for frequency discrepancy due to crystal tolerance and assure accurate "netting".

The use of the crystal controlled oscillator will permit the highly stable reception of signals on the eleven channels selected. The only operation required besides turning the selector switch to the desired crystal position is to turn the band switch to the desired crystal position and tune the main dial to the approximate frequency rocking the knob for maximum "S" meter indication.

In order to ensure proper operation, the crystals should be ordered from your local authorized Hammarlund distributor.

The oscillator or actual crystal frequency for a given signal frequency shall be determined from the following:

SIGNAL FREQ. RANGE (kHz)	ADD IF FREQ. (kHz)	SUBTRACT IF FREQ. (kHz)	MODE OF OPERATION
.54 - 1.05	.455000		Fundamental
1.05 - 2.05	.455000		Fundamental
2.05 - 4.	.455000		Fundamental
4.0 - 7.85	.455000		Fundamental
7.85 - 15.35	3.035		Fundamental
15.35 - 20.662	3.035		Fundamental
20.662 - 30.000		3.035	2nd. Harmonic

NOTE: WHERE LOW SIDE INJECTION IS SPECIFIED, HIGH SIDE INJECTION MAY BE USED AT REDUCED SENSITIVITY.

The RF signal is received at the antenna and applied to the RF amplifier through the antenna terminal strip or shielded connectors, and through the bandswitched antenna tuned circuit. The antenna trimmer, compensating for differing antenna characteristics at differing frequencies, is located across the secondary of the antenna transformer. The calibration oscillator, turned on in the calibrate position, applies its signal to the RF amplifier. This oscillator is a crystal controlled type at 100 kHz. developing a very large number of 100 kHz harmonics to cover all of the bands in the receiver.

To control the receiver sensitivity, one section of the RF gain control sets the bias of the RF amplifier stage. Rotating the control clockwise decreases tube bias, permitting increased amplification and thereby increasing sensitivity to weaker signals.

From the RF amplifier the signal is applied to the first mixer where it is heterodyned with the output of a separate high frequency oscillator. The resulting frequency is the first intermediate frequency (IF). From .54 to 7.85 MHz the HF oscillator is located 455 kHz above the signal frequency. From 7.85 to 30 MHz the HF oscillator is 3035 kHz above the signal frequency. When

operating the 7.85 to 30 MHz bands, the difference frequency of 3035 kHz is fed through a crystal filter and is heterodyned with 2580 kHz crystal controlled oscillator in the converter tube to produce 455 kHz 2nd. IF. When the band selector switch indicates .54 to 7.85 MHz the converter tube ceases to function and the gate tube becomes a regular 455 kHz amplifier. Band switching and frequency tuning occurs in the grids of the mixer and of the oscillator. The arrangement of heterodyning used in this receiver is listed in the accompanying chart. The stability of the oscillator circuit, a must for accurate and repeatable tuning, is maintained by using a separate tube, and keeping the heater supply on at all times, minimizing drift tendencies. In the HQ-180-A and HQ-180-AX Receivers, the filament is supplied with power through filament transformer T22 as long as the line cord is connected to a source of power. If the clock is mounted, power will be required at all times.

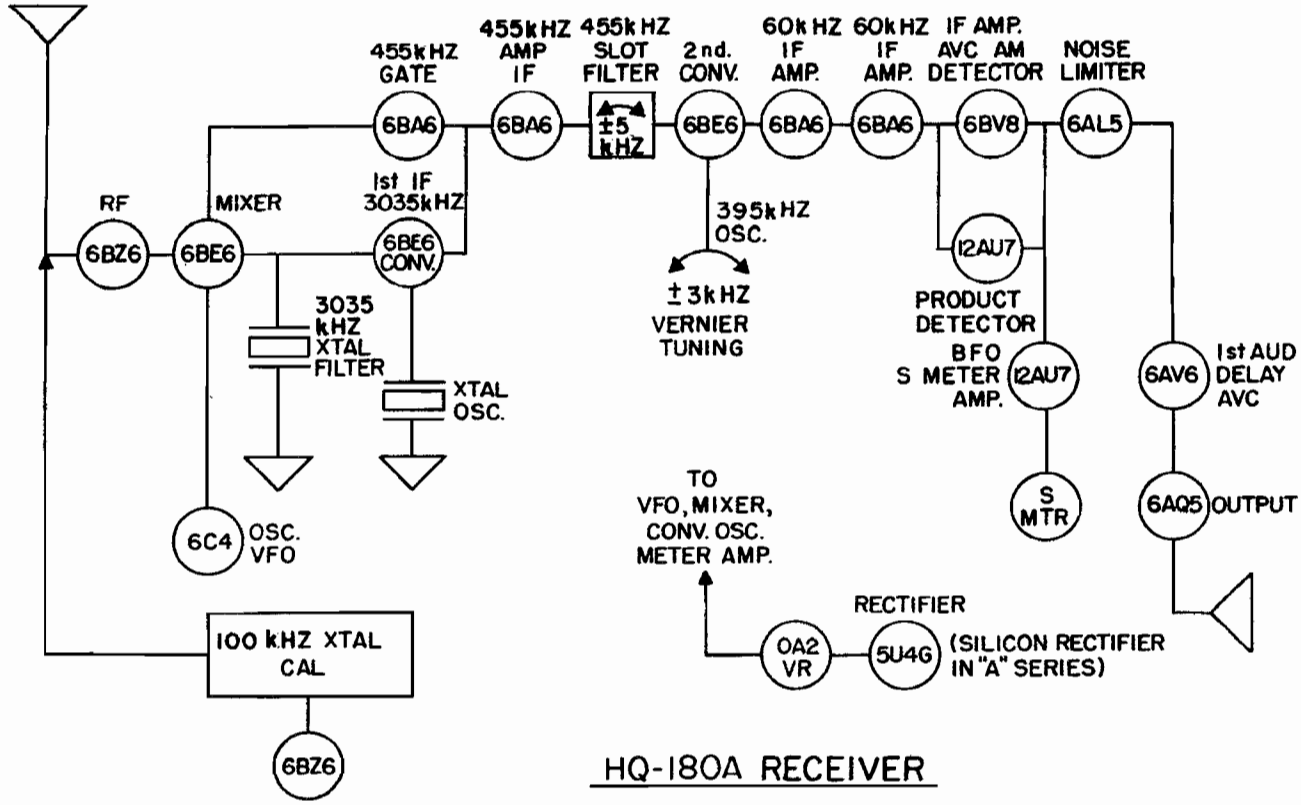

HQ-180A RECEIVER

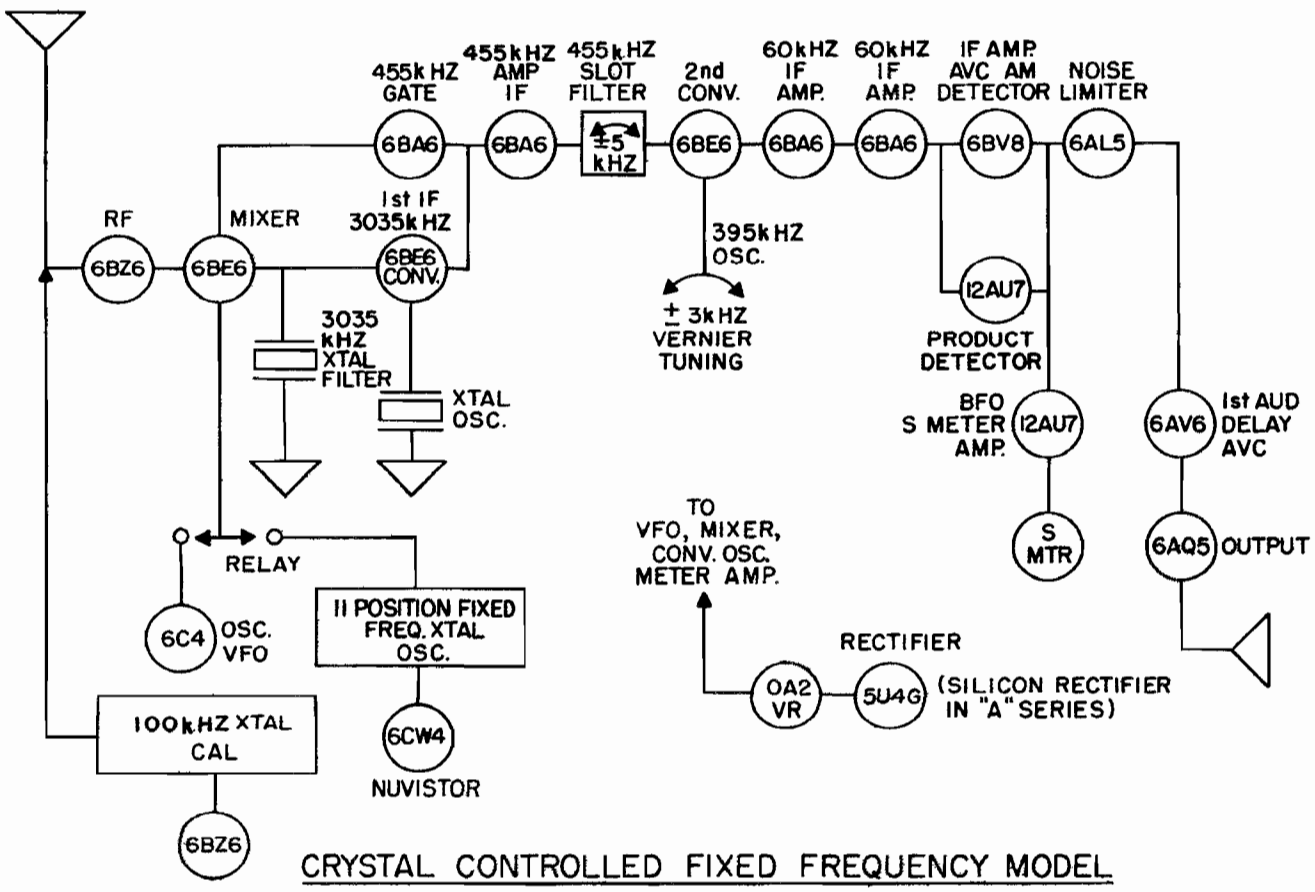

CRYSTAL CONTROLLED FIXED FREQUENCY MODEL

HQ-180AX

FIG. 8

Table 1 shows that the second mixer becomes a 455 kHz amplifier on the two lowest frequency bands. Section S2F of the band switch accomplishes this by removing the crystal circuit from the oscillator portion of the tube at this time. When the oscillator is allowed to work, the first IF signal beats with the oscillator signal to become the second IF.

V4 is a 455 kHz amplifier whose gain is also controlled by a second section of the RF gain control, resulting in receiver sensitivity adjustment in the same manner as before.

Before the 455 kHz signal is applied to the third mixer, it is passed through the slot circuit. This circuit is designed to provide a narrow section of frequency rejection capable of being set precisely on an interfering signal. The slot depth control permits its depth or amount of rejection to be set as required for best results. The diagrams show the characteristics and the capabilities of this circuit.

BAND	FREQUENCIES IN kHz						
MHz	RF	1st. OSC.	1st. IF	2nd. OSC.	2nd. IF	3rd. OSC.	3rd. IF
.54 - 1.05	S	S + 455	455	(Amplifier Stage)		395	60
1.05 - 2.05	S	S + 455	455	(Amplifier Stage)		395	60
2.05 - 4.0	S	S + 455	455	(Amplifier Stage)		395	60
4.0 - 7.85	S	S + 455	455	(Amplifier Stage)		395	60
7.85 - 15.35	S	S + 3035	3035	2580	455	395	60
15.35 - 30.0	S	S + 3035	3035	2580	455	395	60

S = Signal Frequency Received

CHART OF FREQUENCY HETERODYNING

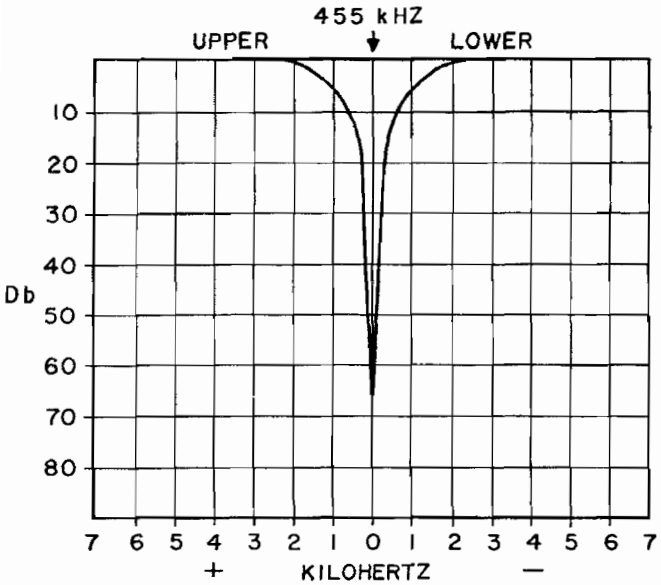

SLOT FREQUENCY AT CENTER

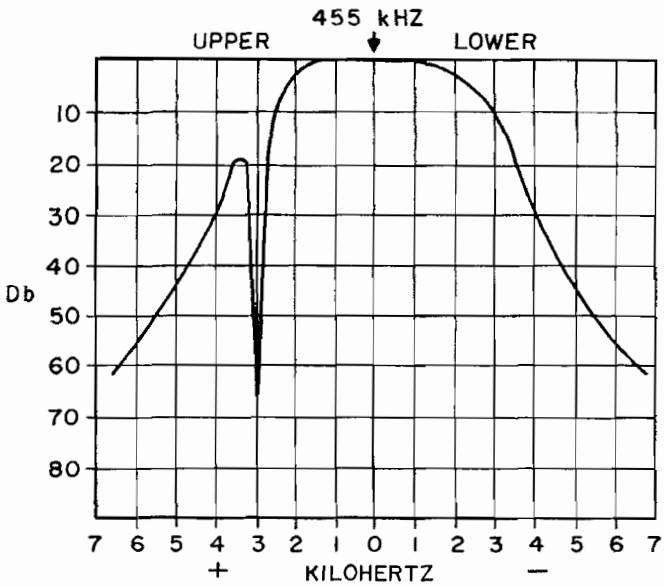

EXAMPLE OF SLOT AT +3 kHZ SUPERIMPOSED ON THEORETICAL 455 kHZ PASSBAND CURVE

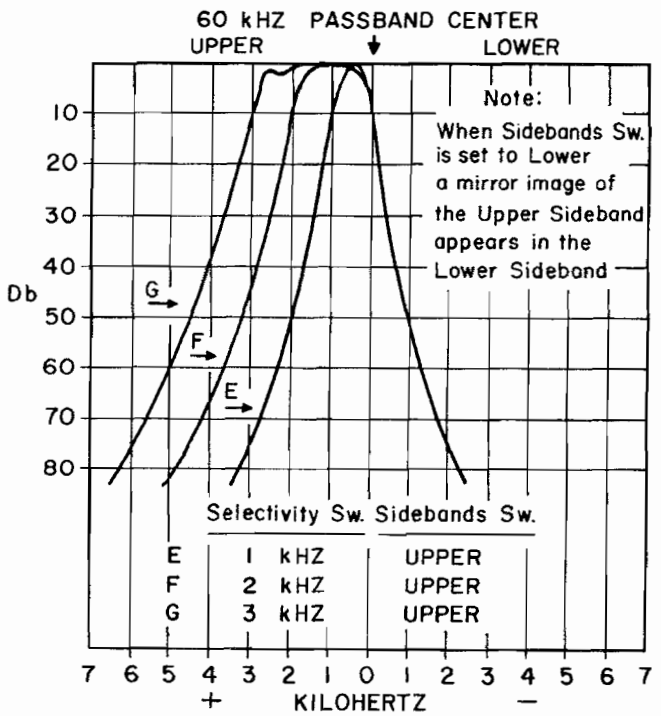

SINGLE SIDEBAND PASSBAND CURVES

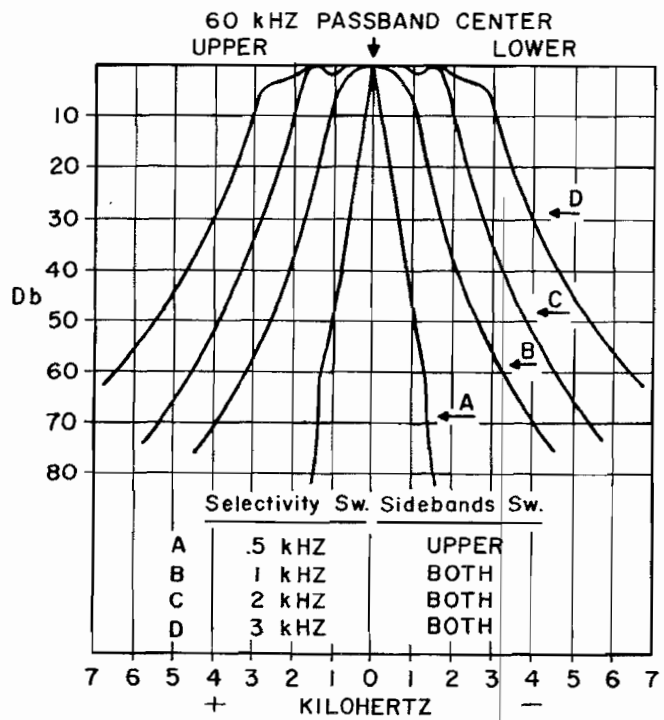

FULL RESPONSE CURVES, BOTH SIDEBANDS

SLOT FILTER RESPONSE CURVE

FIG. 9

Conversion again occurs to result in a third IF of 60 kHz. Three stages of 60 kHz IF amplification are provided along with means for adjusting the selectivity of the receiver to aid in the rejection of unwanted interfering signals. This is especially useful for code reception where little sidebands are transmitted. A wide band receiver is a detriment here because of such a receiver's capability of amplifying all nearby stations almost as well as the one to be listened to. For single sideband operation, a second switch permits setting the receiver passband for maximum reception only on the side of the carrier required for reception.

The signal delivered from the 60 kHz amplifier stages is then applied to four separate detector circuits, two for efficient audio development, and two for the generation of correct AVC voltages that will assure the best possible reception of all types and levels of RF signals. The general block diagram shows that AM reception is handled by a normal diode detector circuit. See the simplified schematic of the detector, BFO and noise limiter circuits. In the AM position, the resulting audio is passed through the noise limiter tube V10 and on to the audio gain control.

In the CW position, V9 acts as a product detector, and the audio is developed from the beat between the incoming 60 kHz and the output of the BFO at a frequency that is at or near 60 kHz depending on the setting of the BFO control. The BFO is aligned so that zero beat occurs when the BFO control is centered. The audio output is then taken from the junction of R73 and R74 and applied through the CW position of the mode switch to V10 in the same manner as for the AM audio.

Single sideband detection is exactly the same as for CW except that the BFO is a fixed frequency in the HQ-180-A Receiver. For the HQ-180, keep BFO control at "0". In SSB operation tuning for intelligibility requires that the suppressed carrier be replaced within the receiver. The BFO does just that, the vernier tuning dial being used to precisely tune the receiver to the sideband that has been transmitted. The heterodyning between the BFO frequency and the received sideband produces audio in the same manner as audio is produced for CW.

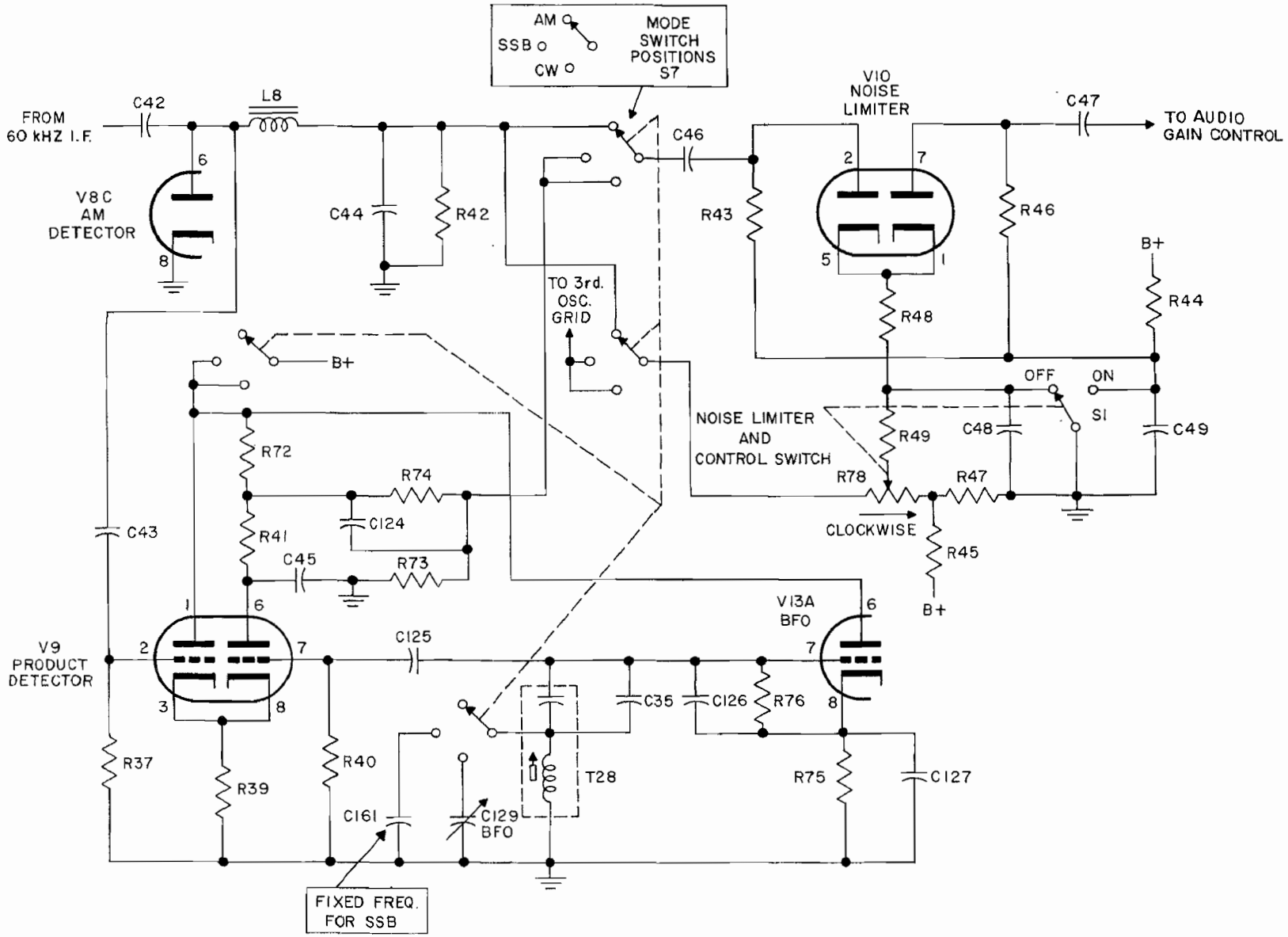

DETECTOR, BFO & NOISE LIMITER CIRCUITS

FIG. 10

The noise limiter is a very useful circuit that is designed to assure that no noise or interference signal peaks will be higher than the wanted signal. In the "OFF" position, B + is applied to the plates of V10 while the cathodes are grounded. Since the tube sections are conducting, any signal applied to V10 from the detectors is passed through to the audio gain control. In the "ON" position, the plates are connected to ground, while B + is applied to the cathodes through the noise limiter control. The circuit is arranged that when the control is at its counter-clockwise end of rotation, audio is permitted to pass through almost unreduced. As the control is turned clockwise, the B + applied to the cathodes increases so that strong peaks are clipped. In operation, it will be noted that the noise limiter is used to clip noise peaks that are higher than the desired audio; the control is therefore turned clockwise until it is noted that the wanted audio starts to be clipped (volume reduced). The correct position of the control is just below the point where this occurs. At this point, maximum clipping is occurring without reducing the wanted signal. The noise limiter is capable of operation on any type of signal, but it should be noted that less noise and interference can often be obtained by reducing the receiver bandwidth as well.

Automatic volume control voltages are developed from the two circuits illustrated. RF detection takes place through both V8B and the diode section of V16. Each circuit is arranged to produce a negative voltage that will increase as the received signal increases. Except in the "OFF" position, AVC voltages are applied to the RF amplifier, to the 2nd. IF amplifier, to the 3rd. mixer, and to the 1st. 60 kHz IF amplifier. The positive voltage developed across R92 prevents AVC from being applied to the RF amplifier until the incoming signal is high enough to overcome it. This delayed AVC improves the reception of weak signals.

The other AVC circuit is not biased in this fashion, but it is designed to allow for an adjustable decay characteristic. AVC is applied immediately, but its decay in the event of fading is adjustable to be slow, medium or fast depending on the type of signal and on the atmosphere conditions of the time. R83, R84 and R85 set the discharge time of C131, creating the appropriate AVC decay.

The carrier level "S" meter circuit operates on the same AVC signal just described. The circuit is a bridge, with the tube and R88 on one side, and R21, R20 and R22 with its switched resistors on the other. The meter is in the center of the bridge, set to zero in the absence of a signal (AVC zero). When a signal is received, AVC is developed, the tube current changes to unbalance the bridge, and the meter reads. The greater the signal, the greater the unbalance, and the higher the meter reading. The sensitivity setting is made only when a signal of known strength is applied to the receiver, usually from a precise signal generator whose output level can accurately be measured.

The audio stages are conventional in nature, except for the special auto-response circuit illustrated. This is a negative feedback system that provides maximum effect at low audio gain control settings. Strong signals are then permitted the highest fidelity of response and lowest distortion, while increasing the gain on weak signals narrows the audio response to improve signal selectivity. An improved signal-to-noise ratio results. A further advantage is the critical damping of the speaker for elimination of speaker resonance effects. Speech reception is improved and receiver output noise is reduced.

The receiver power supply is arranged to permit the 1st. oscillator and mixer to remain heated even when the rest of the set is turned off. As has been previously mentioned, this is to provide increased receiver stability. The schematic diagram shows these tubes heated from a separate filament transformer, connected to the power line through only the fuse. The electric clock timer is also connected to the line in the same manner. The timer switch mechanism is in series with the normal ON-OFF switch so that the set can be turned on automatically at any time. The time mechanism is designed so that it must be turned off manually to reset the mechanism for automatic turn-on in the next 24 hour period.

Plate voltage regulation is enhanced through the use of silicon rectifiers, and futher stability is established with a gas regulator tube for the critical RF stages and for the calibrated "S" meter.

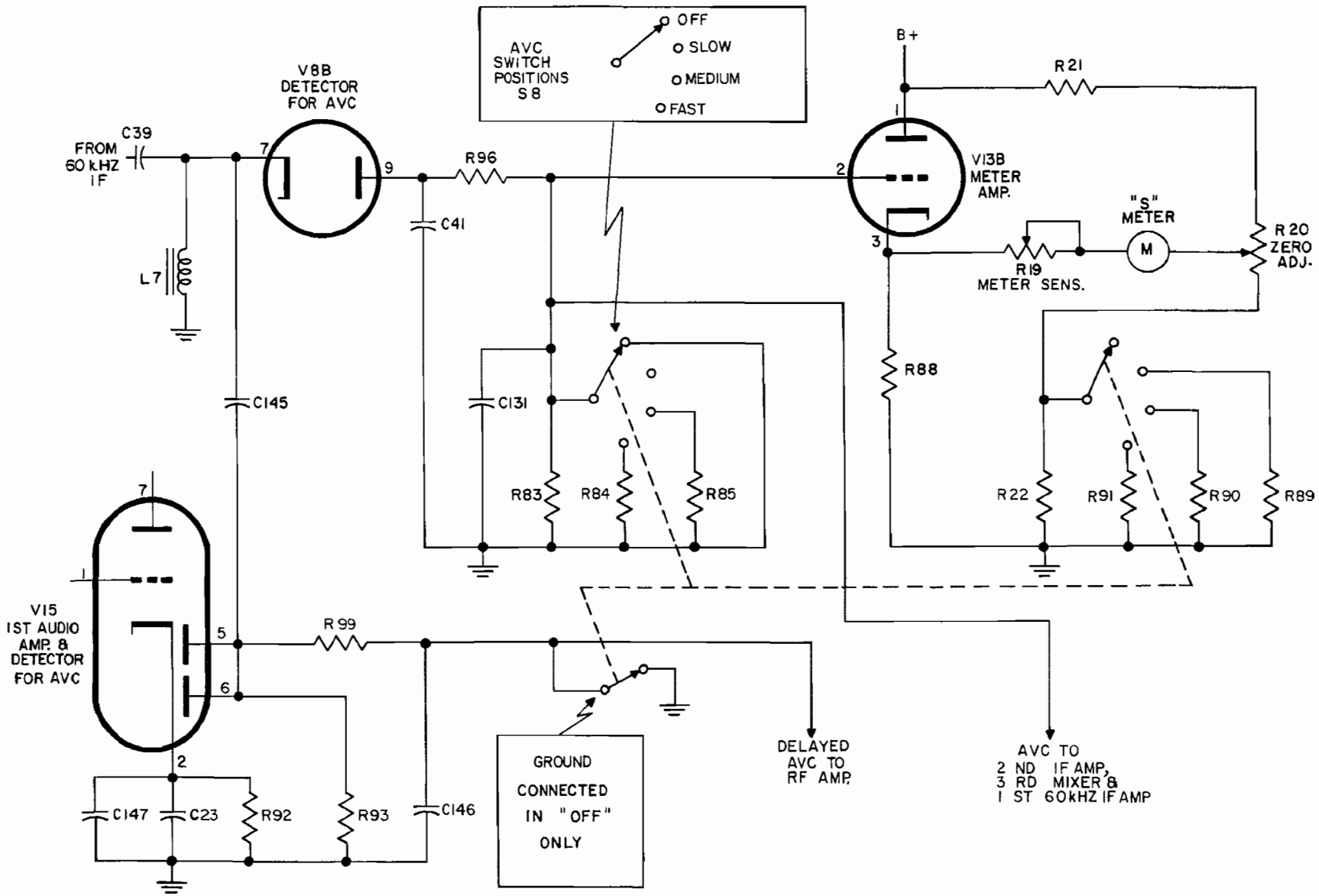

AVC & "S" METER CIRCUITS

FIG. 11

Except for the power transformer primary connections, the supply circuitry for the export version is the same.

Finally, there are the accessory and system sockets, and the SEND-RECEIVE switch, each clearly illustrated on the schematic diagram and self-explanatory. In the SEND position, the B+ to the RF amplifier, the 2nd. mixer and the 2nd. IF amplifier is removed, muting the receiver. Further or alternate muting can be applied through the system socket from the transmitter.

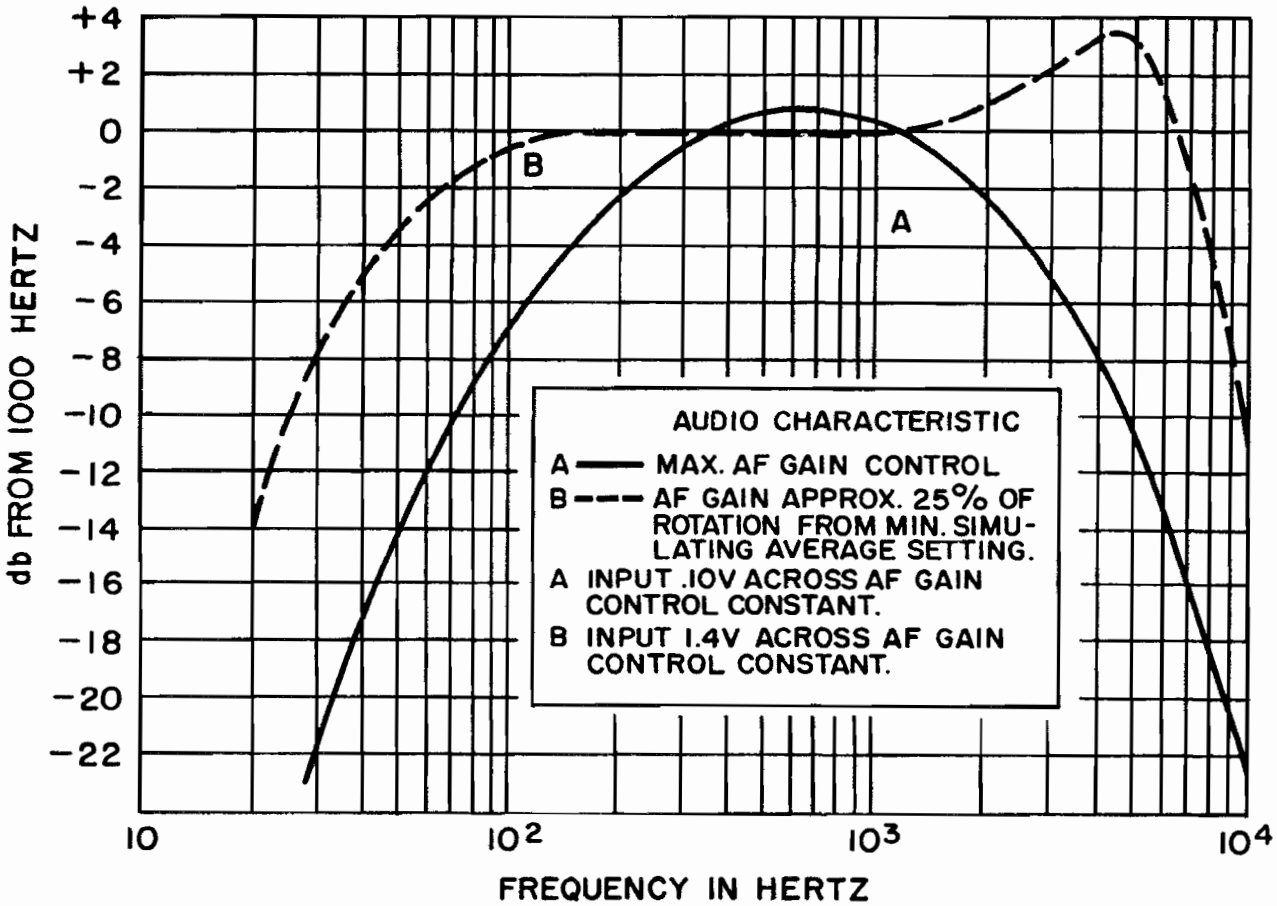

AUTO-RESPONSE CURVE

FIG. 12

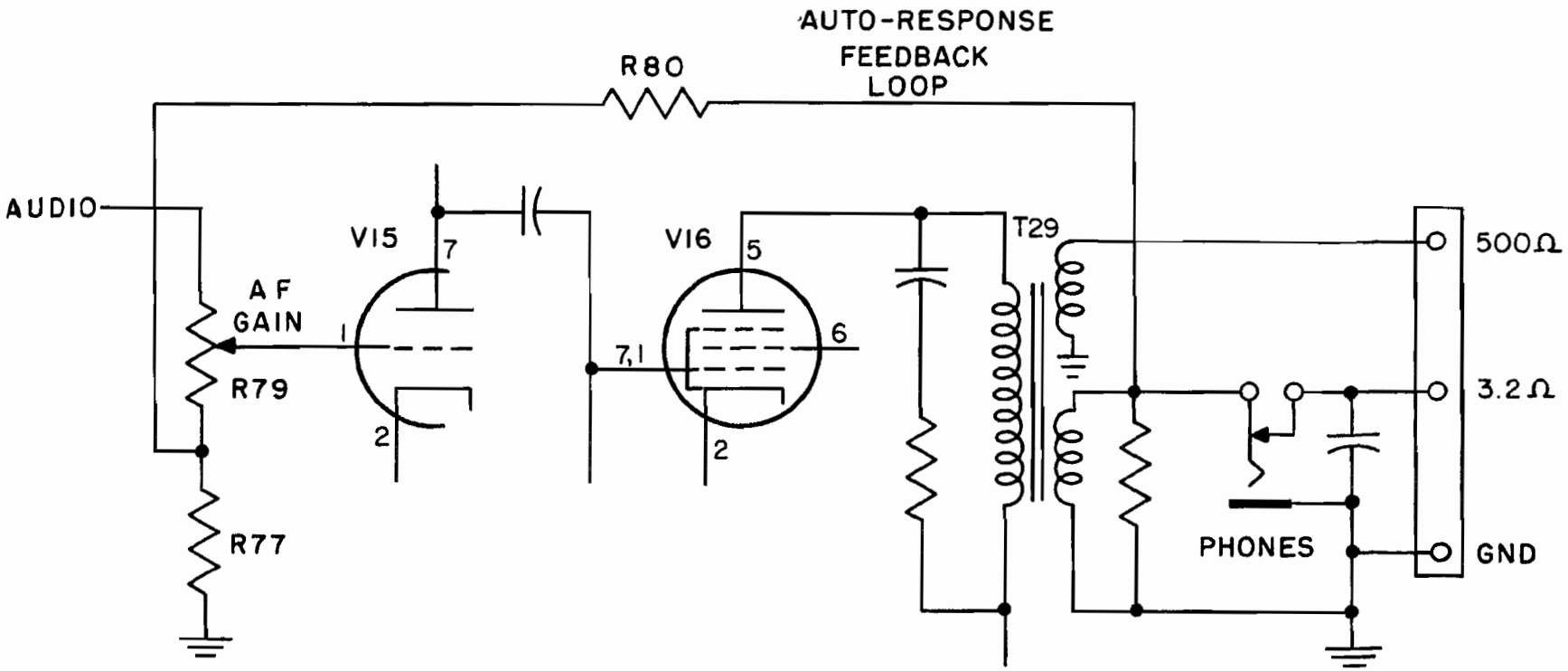

AUTO-RESPONSE CIRCUIT

FIG. 13

SECTION IV SERVICE AND MAINTENANCE

4.1 MAINTENANCE

This receiver has been carefully constructed, inspected, adjusted and aligned at the factory to provide a long period of trouble-free use. Unless you have the proper equipment and the detailed knowledge to service complex electronic circuitry, it is not recommended that any other maintenance but tube testing be attempted. In particular, DO NOT ADJUST TRIMMERS OR TRANSFORMER CORES, because this will reduce the reception capabilities, unless it is done while following the alignment instructions correctly.

4.2 CIRCUIT DESCRIPTION

Many receiver troubles can frequently be resolved simply by testing and changing tubes and by making a few minor adjustments, but in order to properly service this set it is important to be able to diagnose obscure troubles through an understanding of the circuits involved. It is for this purpose that this section is provided. A communications receiver of this type contains several special circuits not normally included in the home radio. Examples of such circuits are the BFO (beat frequency oscillator), the slot, triple conversion, delayed AVC (automatic volume control), etc.

4.3 GENERAL

This section will provide the instructions for the correct servicing of the receiver. While no particular unusual procedures are called for, it should be noted that proper tools and test equipment must be available to undertake the electrical alignment. Inadequate or inaccurate test equipment may result in generally poor operating results.

Excessive oscillator drift which is most noticeable on all of the high frequency bands plus a microphonic condition, is usually the result of a poor 6C4 (V12) high frequency oscillator. This tube is also capable of producing a poor beat note with a ripple in it, also especially noticeable on the high bands. Excessive drift can be attributed to a poor 6BE6 (V2). This tube can also cause hum modulation most evident on the two highest frequency bands. Some-

times interchanging the 6BE6's between V2 and V3 can produce a noticeable improvement.

Normally there is no reason to remove the chassis from the cabinet, because the top cover allows access to all of the tubes, and to the clock adjustment. However, in the case of RF and IF alignment, it will be necessary to take the chassis out to gain access to the under-chassis alignment settings.

Further disassembly is not recommended except in the case of dial cord replacement. As this is a steel cable, breakage is unlikely, but if it should, it will be required to remove the front panel from the chassis, and to remove the two calibrated dials.

The instructions for the removal of the chassis from the cabinet, and for the disassembly of the front panel, are presented here. Follow the instruction steps with care, and there will be no trouble identifying and replacing all of the parts. Note particularly the knob and dial alignment procedures.

4.4 REMOVING RECEIVER CHASSIS FROM THE CABINET

1. Disconnect all wires and cables at the rear of the chassis.

2. Tip the cabinet up from the front and remove the hex head screw on the bottom.

3. Remove the three hex head screws at the back of the cabinet.

4. Loosen the two Phillips head screws at the top front of the cabinet; do not remove them.

5. Slide the panel and chassis forward to clear the cabinet. Guide the line cord as necessary. It is advisable to set the chassis down so that the panel overhangs the edge of a table. This will protect the panel finish, and relieve strain on the panel mounting screws.

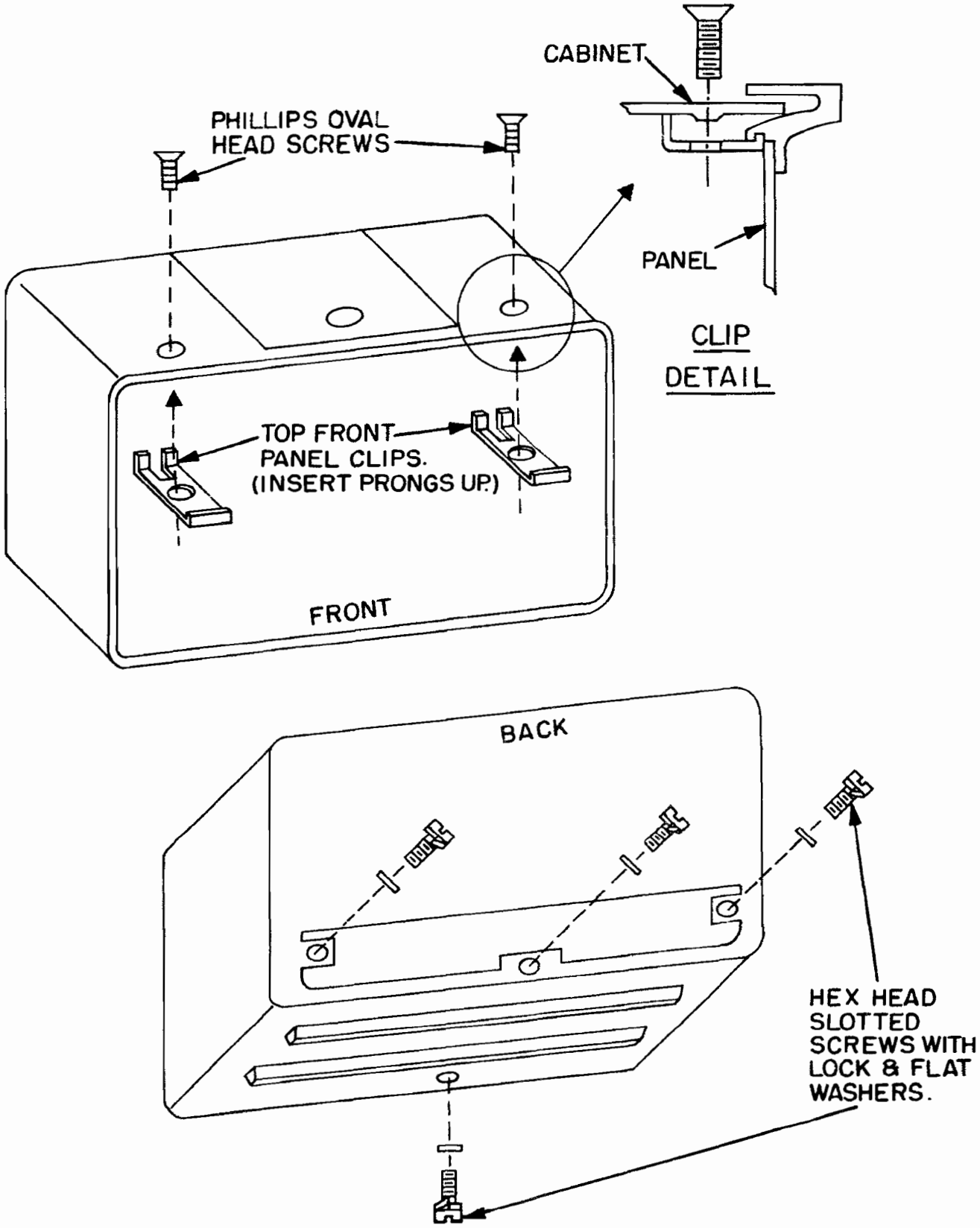

HARDWARE TO FASTEN CHASSIS TO CABINET

4.5 REPLACING RECEIVER CHASSIS IN THE CABINET

1. Slide the chassis and panel into the cabinet, guiding the line cord through the rear opening as necessary. Check that the "L" bracket under the chassis does not catch under the cabinet as the chassis is slid into it. Make sure the cabinet edges are fitted into the slot around the inside edge of the panel. Check that the clips fit under the panel edge as shown in the illustration.

2. Insert the three screws, lock and flat washers in the back of the cabinet. Do not tighten firmly yet.

3. Tip up the cabinet and insert the screw, lock and flat washer in the bottom front of the cabinet. Do not tighten yet.

4. Tighten the three screws in the rear first, then tighten the screw on the bottom.

5. Tighten the two Phillips head screws in the top of the cabinet.

4.6 REMOVAL OF THE FRONT PANEL FROM THE CHASSIS

Refer to the diagrams for the locations and identification of all parts.

1. Remove all knobs except those of the clock and dial calibration. Turn all capacitors so that their plates are fully meshed.

2. Remove the following:
   - Nuts from the controls shown on the diagram.
   - Nut and lock washer from the headphone jack.
   - Screws and lock washers from the capacitors.
   - Pry off the two red pointers; be careful not to bend them.

3. On the back of the front panel, remove the following:
   - Large nuts and fiber washers.
   - Dial Calibration drive discs.
   - "S" meter lamp assembly.

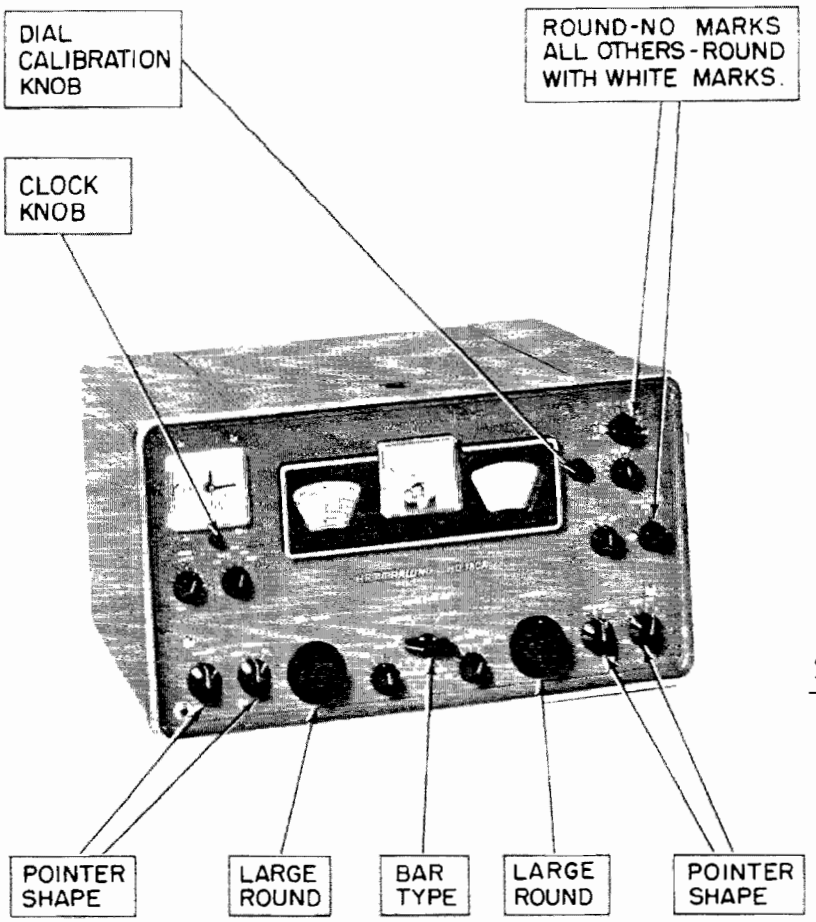

STEP 1

REMOVE ALL KNOBS EXCEPT CLOCK AND DIAL CALIBRATION

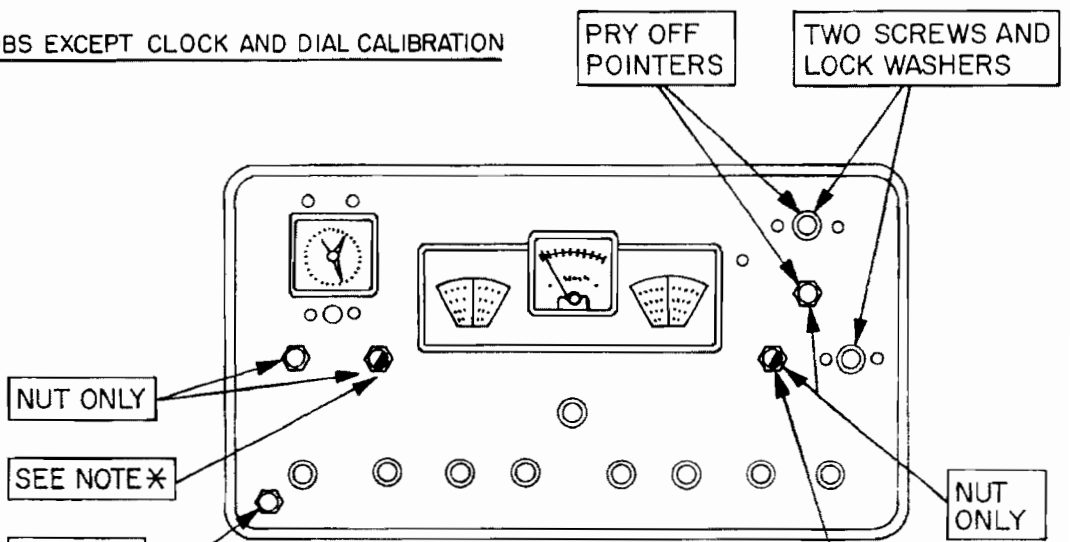

STEP 2

REMOVE NUTS, SCREWS AND WASHERS INDICATED.

✱ SET SCREW OF KNOBS TO LINE UP WITH FLATS OF SHAFTS.

CAUTION TO PREVENT DAMAGE TO CAPACITOR PLATES, MAKE SURE THEY ARE FULLY MESHED.

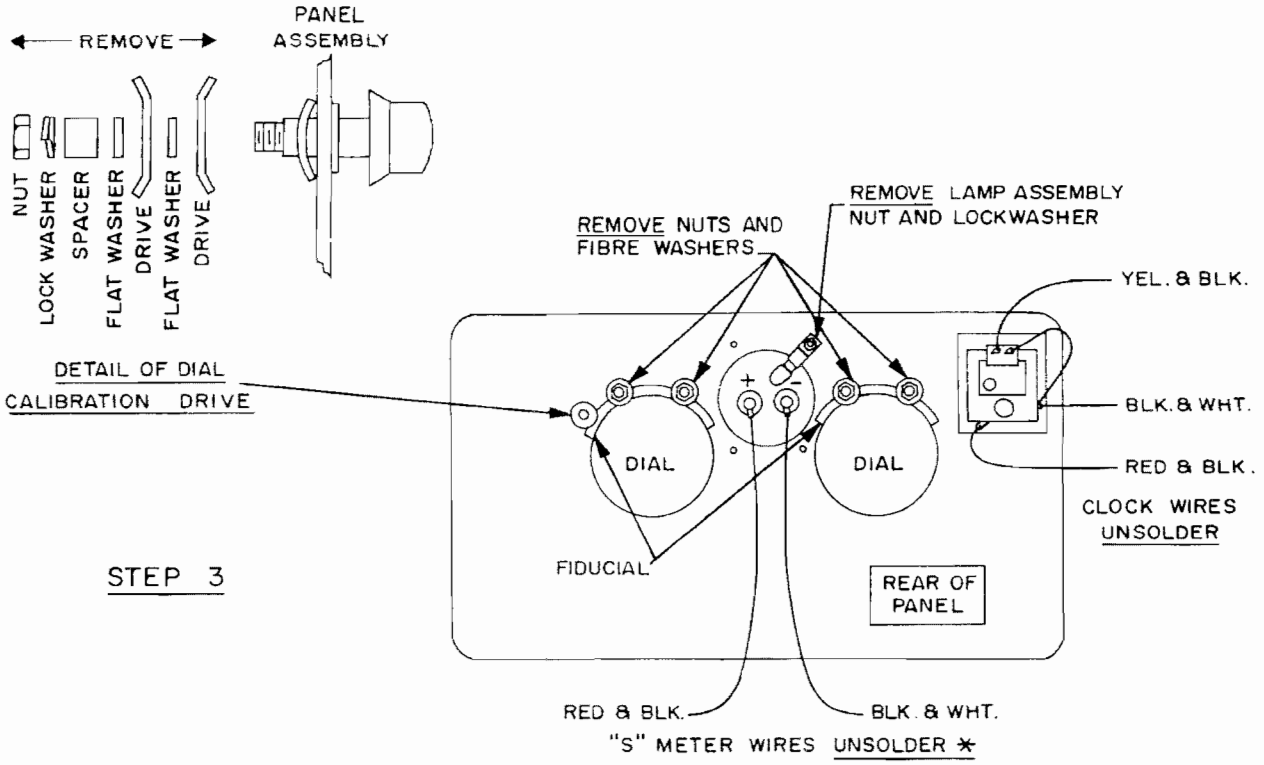

REMOVE AND UNSOLDER AS INDICATED - FOR CONVENIENCE, - PULL OFF OTHER TWO LAMPHOLDERS.

* DO NOT REMOVE NUTS FROM METER, THESE ARE INTERNAL MOUNTING STUDS.

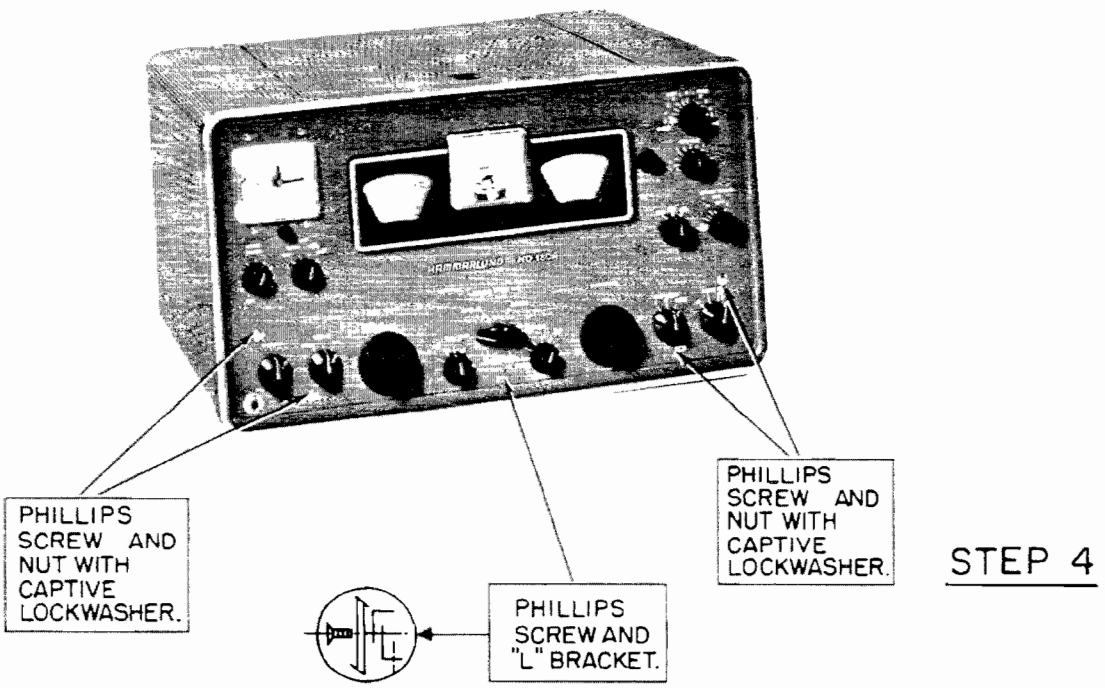

REMOVE SCREWS, NUTS AND BRACKET INDICATED

CAUTION - HOLD PANEL TO PREVENT FALLING

Unsolder the two wires to the meter, and the three wires on the clock.

Pull off the other two lamp assemblies for working convenience in later steps.

4. On the front of the panel, remove:
   Four Phillips screws and nuts.
   One smaller Phillips screw and "L" bracket.
   Hold panel to prevent it from falling as the last screw is removed.

This completes the removal of the front panel.

5. Loosen but do not remove the set screws on the two dials. DO NOT MOVE THE SET SCREWS OF THE PULLEYS. Now pull the two dial assemblies forward, at the same time guiding the left dial out of the tuning drive discs.

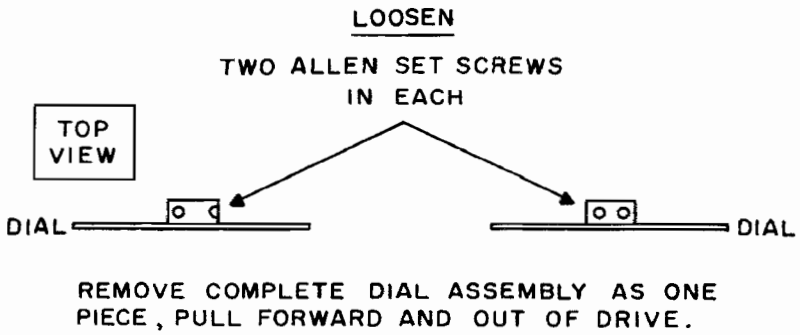

STEP 5.

6. Replace the two dial assemblies on their shafts, inserting the left dial into the tuning drive discs. Make sure that the tuning capacitor plates are fully meshed, then turn the dials so that the left end of each dial is approximately vertical.

   Push on the dials so that the shaft ends are about 1/8 inch recessed. It should be possible to see the previous set screw marks on the shafts to help in this setting.

   Now tighten one set screw on each shaft. Final setting will come in a later step.

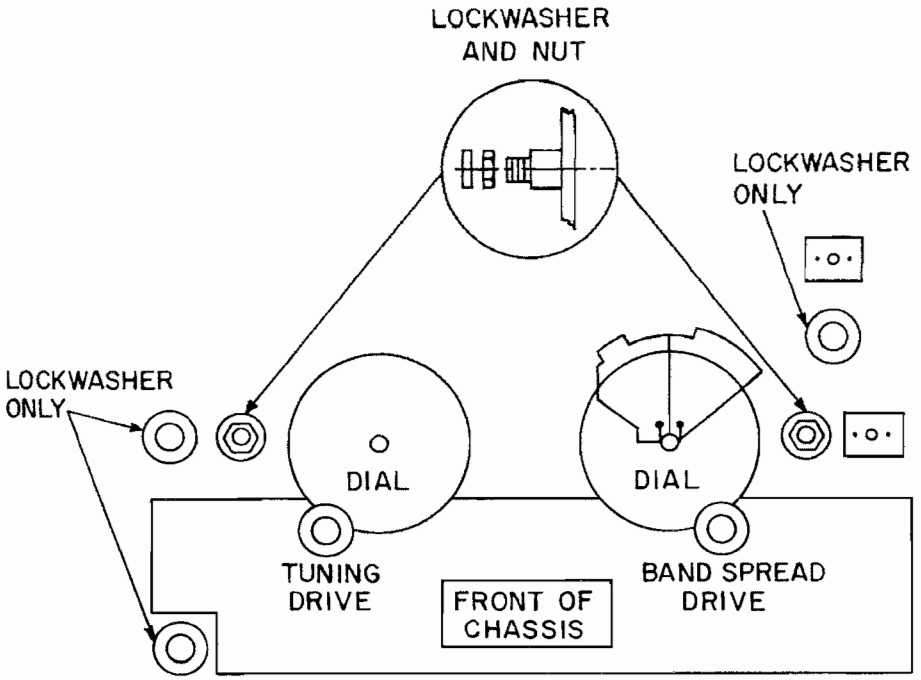

STEP 7

HARDWARE FOR MOUNTING CONTROLS - WHEN PANEL IS REMOVED

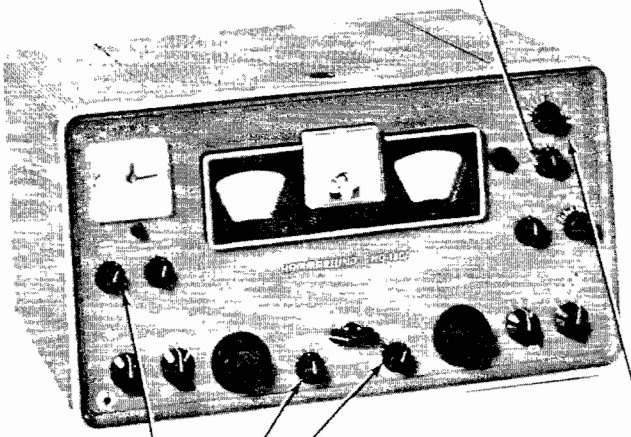

STEP 10

KNOB ALIGNMENT POSITIONS - REMAINING SHAFTS HAVE FLATS IF KNOB ALIGNMENT IS REQUIRED.

REPLACING POINTERS AND KNOBS

7. Check that the proper nuts and lock washers are in place on the controls that were removed from the front panel.

   Locate the panel in place, inserting the controls in their proper holes.

   Secure the front panel by replacing the hardware removed in step 4.

   Note that the "L" bracket fits over the small terminal strip located inside the chassis.

8. On the back of the front panel, replace the hardware removed in step 3. Check that the dial calibration drive is correctly restored with the transparent segment within the discs. Re-solder the wires to the meter and to the clock; see the step 3 illustration for the wire color code.

9. On the front of the panel, replace the hardware removed in step 2. Be careful not to scratch the panel when tightening the nuts, and remember to line up the flats of the two controls indicated in the step 2 illustration.

After step 9 is completed, check that the dials and the dial calibration system operate smoothly and without interference. If necessary, loosen the front panel screws of step 4 and readjust panel positioning to obtain proper dial operation.

10. Replace the two red pointers by pushing them onto the inner shafts. Be careful not to bend them. Follow the instructions on the step 11 diagram for capacitor plate meshing, then replace all knobs. Knob identification appears in step 1 illustration.

11. This step is for dial alignment.

    Reconnect the receiver and turn it on. Allow it to warm up for about a half hour.

    After the warm-up period, tune in to 4 MHz on the main tuning dial and 100 on the logging scale of the Band Spread Dial, and turn on the crystal calibrator.

Set the dial calibrator so that the hairline is in line with the mark on the top of the opening in the dial escutcheon.

Noting that the tuning capacitor plates are in the correct position for the low end of the band (fully meshed), tune for zero beat, ignoring the dial frequency setting.

Loosen the left dial set screw, hold the capacitor pulley to maintain zero beat, then set the dial to exactly 4 MHz. Now tighten the dial set screw again FIRMLY.

Turn the dial to gain access to the other set screw on that dial, and tighten it firmly as well. Repeat the same procedure for the right dial, but using 100 on the logging scale this time.

This completes the dial calibration procedure. Check on other bands; if dial calibration is far out, or not possible to be attained, RF alignment will have to be undertaken.

4.7 ALIGNMENT PROCEDURE

This receiver has been carefully aligned at the factory and should never require any more than a touch-up to retain the peak of its performance. If alignment is necessary, follow the instructions provided below with care.

For the alignment procedure, the equipment listed is required:

Non-metallic alignment tools, General Cement #5097 and #8282, or equivalents.

DC Vacuum-tube Voltmeter.

Signal Generator(s) capable of accurately producing unmodulated signals of:
60 kHz, 455 kHz, 3035 kHz, and RF ranging from .54 MHz to 30.0 MHz.

Alignment must be undertaken with the receiver out of its cabinet. Remove the chassis from the cabinet as instructed in this manual. When removed, set the chassis on its end with the power transformer down nearest the table top. This is to permit access to both the top and bottom of the chassis.

Before operating the receiver, adjust the "S" meter pointer screw on the front face of the meter to set the needle exactly over the zero mark on the scale.

Connect the speaker to the receiver, plug the set into a source of power, and turn it on.

BEFORE ALIGNMENT, THE RECEIVER MUST BE ALLOWED TO WARM UP FOR AT LEAST A HALF HOUR. This is to assure frequency stability.

KNOB FUNCTION	NORMAL POSITION
Band Selector	7.85 - 15.35 MHz band
Bandspread Tuning Dial (arbitrary)	100
AM-SSB-CW Selector	AM
Sideband Selector	U
Selectivity Selector	5 kHz
Slot Frequency	Counterclockwise
Slot Depth	See AM reception
Beat Frequency Oscillator	0
Noise Limiter	Off
AVC	Off
Antenna	Center
Calibration Reset	Center
SEND-RECEIVE Switch	RECEIVE
Audio & RF Gain	Adjust to Test Requirements

After warm-up, set the RF gain control fully counterclockwise without actually turning the set off, and adjust the meter zero control at the rear of the receiver chassis again for zero on the scale. The AVC switch must be set to a position other than "OFF" for the meter to read.

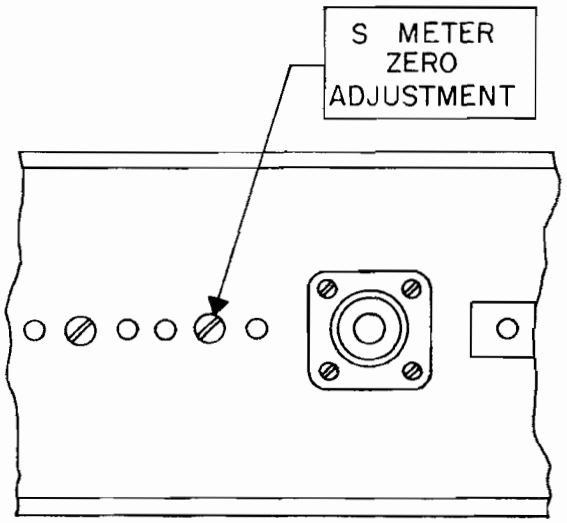

REAR OF CHASSIS

Set all of the front panel controls as shown in the illustration at the start of the alignment procedure. Changes to these settings will be required as the alignment progresses.

Except where noted in the diagrams, the coil slugs are set from the top of the can. Be careful that you are actually turning the proper slug; it is sometimes easy to be adjusting the wrong one, or even to be turning both at once if they happen to be close together inside the coil.

4.8 IF ALIGNMENT

1. Connect the VTVM to the junction of L8 and C44 and chassis ground.

   Connect the signal generator for the 60 kHz first adjustments to the junction of C28 and T5 and chassis ground.

   Apply an unmodulated 60 kHz, and set T6, T7, T8, T9, T10 and T11 for a maximum negative reading. Remember to reduce the IF input signal level as necessary to maintain about -5 volts DC.

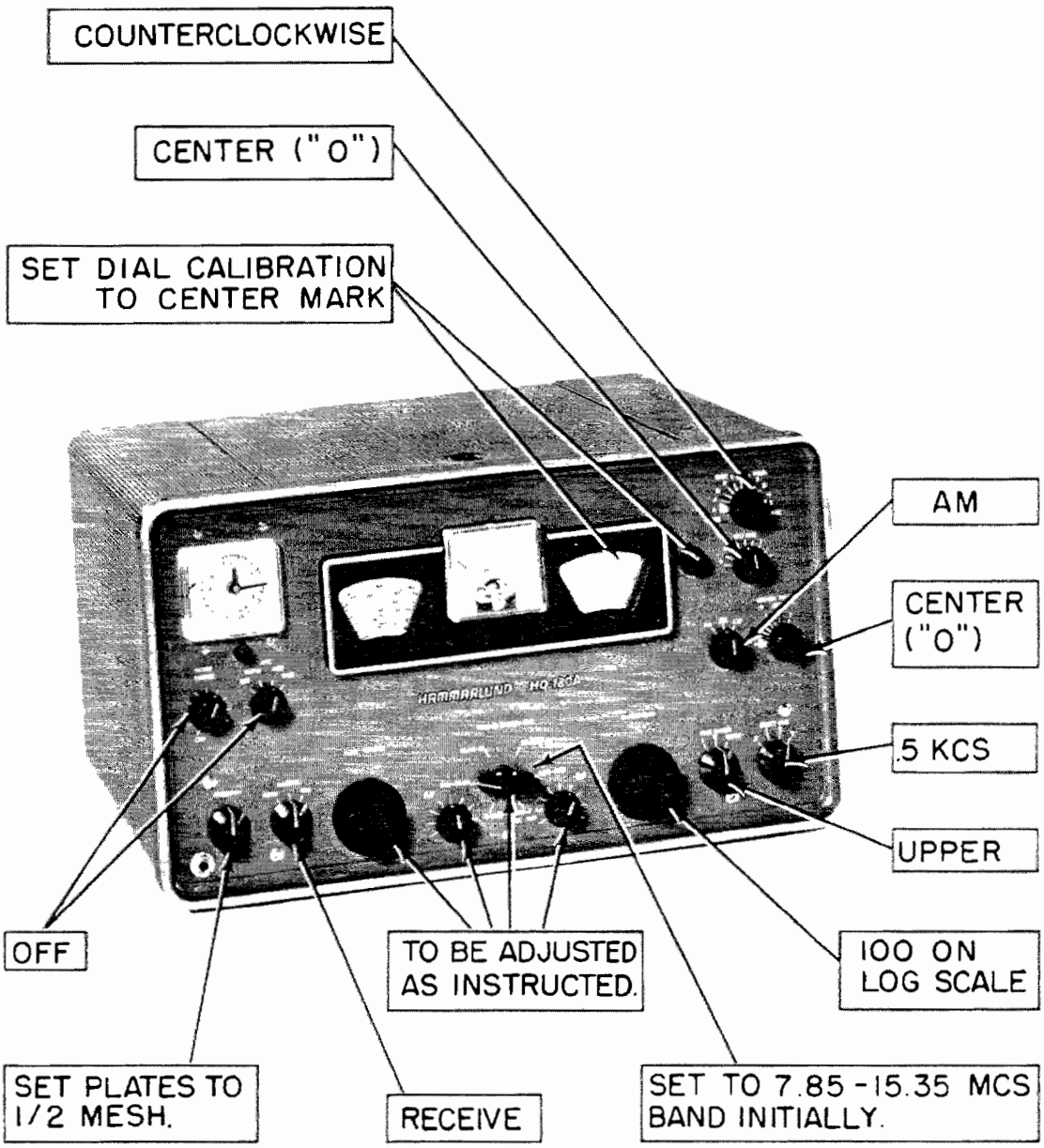

CONTROL SETTING AT START OF ALIGNMENT

FIG. 14

2. Turn the mode switch from AM to CW.

   Check that the BFO is set to zero, then adjust T28 for zero beat as heard in the loud speaker.

   Return the switch to AM.

   Sideband SW to BOTH.

   Selectivity SW to 3 kHz.

3. Disconnect the signal generator from T5 and C28, and reconnect to pin 7 of V2. Apply an unmodulated 455 kHz signal and adjust L4 for maximum meter reading. It should be noted that L4 has 2 peaks, the strongest peak must be used. After adjusting L4, adjust the top and bottom slugs of T3, T4 and T5 and top slug of T1. Remember to reduce the input signal level to maintain approximately -5 volts on the VTVM.

4. Turn the slot frequency control to zero on the front panel markings and the slot depth control (located on a bracket just behind the front panel) to the center of its' range. Adjust L3 for minimum meter reading. After a minimum reading is obtained, adjust the slot depth control to further minimize the reading. After adjusting the slot depth control readjust L3 for minimum reading leaving the slot depth control as previously set. After alignment return the slot frequency control to +5 on the front panel markings.

5. To align the 3035 kHz IF, leave the voltmeter connected as in step 3 and set the signal generator to 3035 kHz. Adjust the output of the generator as necessary to maintain approximately -5 volts on the VTVM. Adjust the bottom slug of T1 and the slug in T2 for maximum meter reading.

This completes the IF alignment procedure. For RF alignment, continue with step 6 below.

4.9 RF ALIGNMENT

6. All HF Oscillator and RF core adjustments are made from the top of the shield cans. RF trimmer adjustments are made from

the bottom of the chassis.

Connect the unmodulated signal generator to the antenna terminal and the generator output ground lead to the antenna ground terminal with the link closed.

Turn the Band Switch to the .54 to 1.05 MHz band and the Selectivity Switch to 1 kHz. Turn the Sideband Selector to BOTH.

Set the antenna control about 30 degrees to the left of vertical (approximately 10 o'clock) and the main tuning dial to .60 MHz.

Set the signal generator frequency to .60 MHz.

Make sure that the bandspread adjustable indicator is set at the center marker and the bandspread dial is set at 100 on the logging scale.

Adjust the top slug in T23, the top slug of T19, and the top slug of T12 for maximum negative reading of the VTVM.

Remember to adjust the generator output and RF gain control to maintain VTVM reading of approximately -5 volts.

Now adjust the top slug of T1 for maximum negative reading on the VTVM.

Set the main tuning dial to 1.0 MHz and the generator frequency to 1.0 MHz.

Adjust C144, C53 and the antenna control for maximum negative reading of the VTVM.

Note that the range of the antenna trimmer is 180 degrees and the control pointer is set for decreasing capacity from horizontal left to horizontal right and should be well within this range from the low frequency to the high frequency adjustments.

Check and if the pointer is at the either end of this range, reset it as required and adjust T12 as found necessary to keep it within range.

Since the adjustments at each alignment frequency of the band reacts on the other, it is necessary to repeat the adjustments until no improvement is obtained. The final adjustments of the band should be the trimmers C144 and C53 at the high frequency alignment point.

Band Switch to 1.05 to 2.05 position
Main dial to 1.1 MHz
Generator to 1.1 MHz
Adjust T23 and bottom slugs of T19 and T13 for maximum negative reading of VTVM.

Generator and main dial to 2.0 MHz.
Adjust C145 and C54 and antenna compensator for maximum negative reading on the VTVM. Repeat the two frequency adjustments until no further improvement can be noted. Finish with the high frequency adjustments.

Band Switch to 2.05 - 4.04 MHz
Dial and Generator to 2.1 MHz
Adjust T24, T14 and top of T20 for maximum negative reading on the VTVM.

Dial and Generator to 4.0 MHz
Adjust C146, C55, and antenna compensator for maximum negative reading on the VTVM.

Repeat the two frequency adjustments until no further improvement can be noted. Finish with the high frequency adjustments.

Band Switch to 4.0 - 7.85 MHz band
Generator and Dial to 4.0 MHz
Adjust T25, bottom slug of T20 and T15 for maximum negative reading on the VTVM.

Generator and Dial to 7.85 MHz
Adjust C147, C56, and the antenna compensator for maximum negative reading on the VTVM. Repeat the two frequency adjustments until no further improvements can be noted. Finish with the high frequency adjustments.

Band Switch to 7.85 - 15.35 MHz
Generator and Dial to 7.85 MHz
Adjust T26, top of T21 and T16 for maximum negative reading on the VTVM.

Generator and Dial to 15.0 MHz
Adjust C148, C57 and antenna compensator for maximum negative reading on the VTVM. Repeat the two frequency adjustments until no further improvement can be noted. Finish with the high frequency adjustments.

Band Switch to 15.35 - 30.0 MHz
Generator and Dial to 15.7 MHz
Adjust T27, bottom of T21, and T17 for maximum negative reading on the VTVM.

Generator and Dial to 30.0 MHz
Adjust C149, C58, and the antenna compensator for maximum negative reading on the VTVM. Repeat the two frequency adjustments until no further improvement can be noted. Finish with the high frequency adjustments.

4.10 "S" METER ADJUSTMENT

1. Turn receiver off, and if necessary adjust the mechanical zero of pointer with a small bladed screw driver.

2. Turn receiver on, and allow 1/2 hour warm-up.

3. Set Function Switch to RECEIVE and turn sensitivity (RF) control counterclockwise.

4. Adjust meter "zero adjust potentiometer" R2- (rear of chassis) to zero.

5. The meter sensitivity adjustment, R19, is set to obtain an S9 reading with 50 microvolts input with the RF gain control at maximum.

NOTE: Usually, R19 will not require readjustment, since the factory setting will vary only slightly as a result of tube changes, ageing, etc. R19 should, therefore, be adjusted only in the event that it is desirable to make the meter more sensitive, or as part of the complete realignment procedure.

RF TRIMMER ADJUSTMENTS MCS					
C57	C58	C55	C56	C53	C54
15.0	30.0	4.0	7.8	1.0	2.0

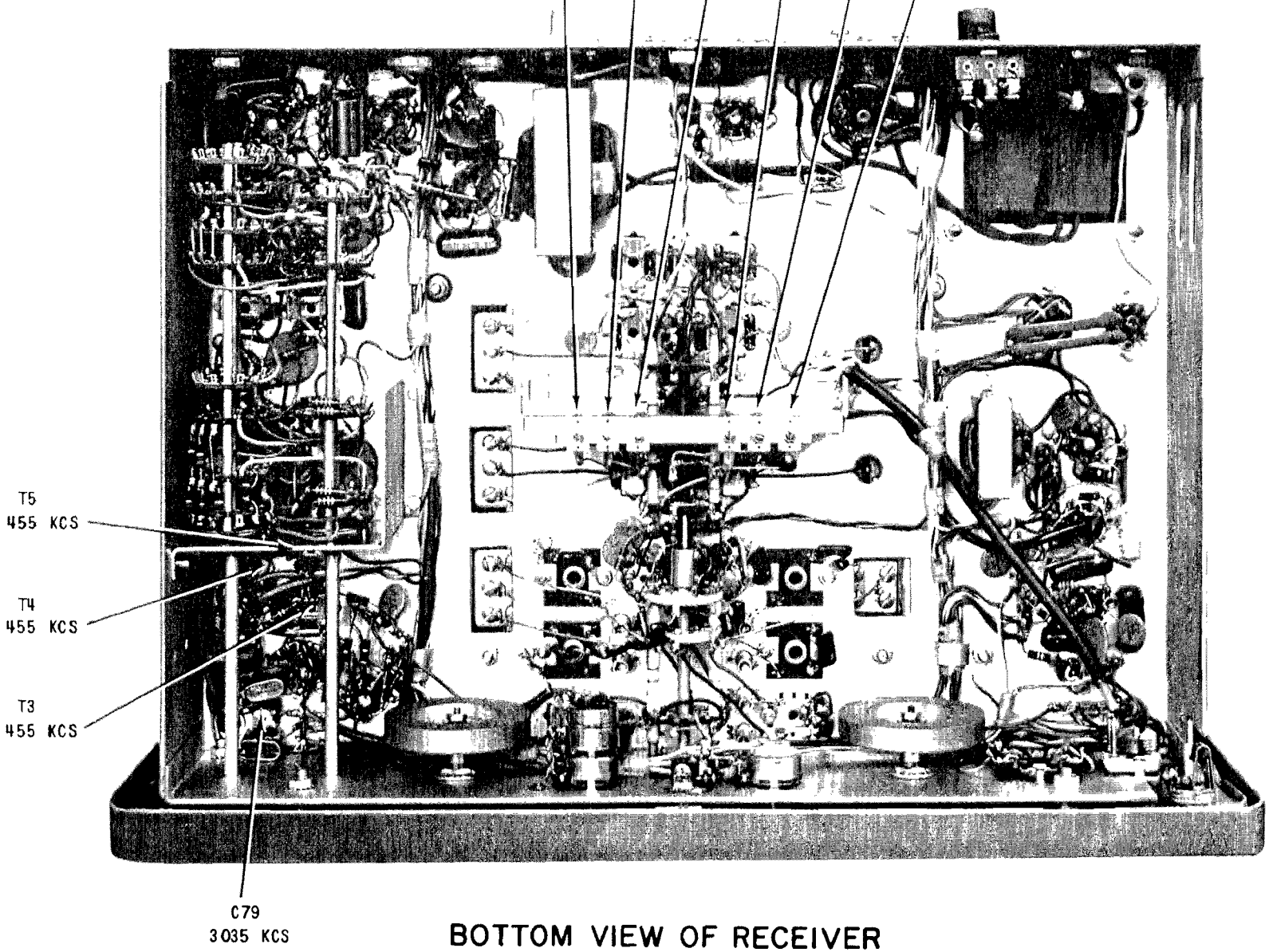

BOTTOM VIEW OF RECEIVER

FIG. 15

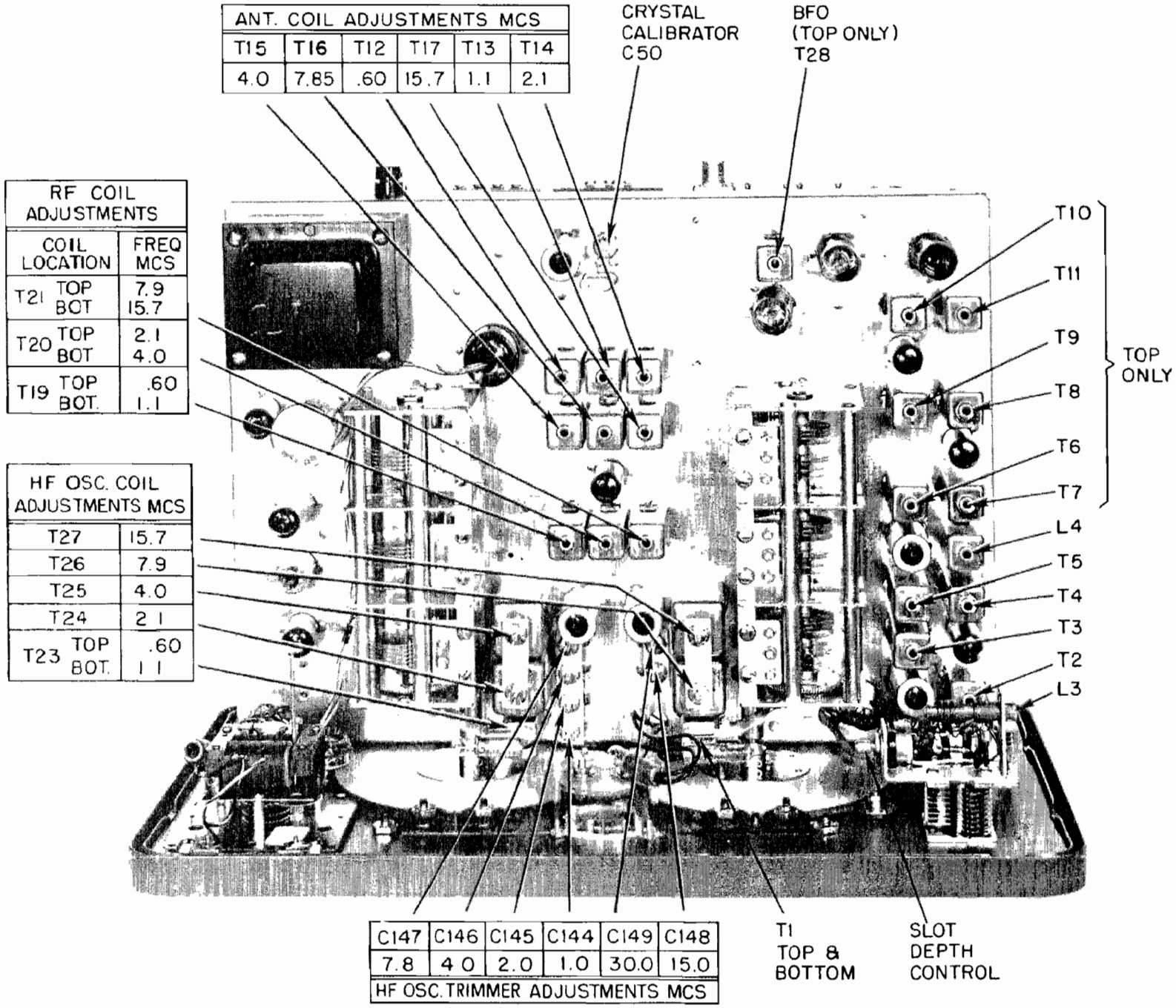

FIG.16 TOP VIEW OF RECEIVER

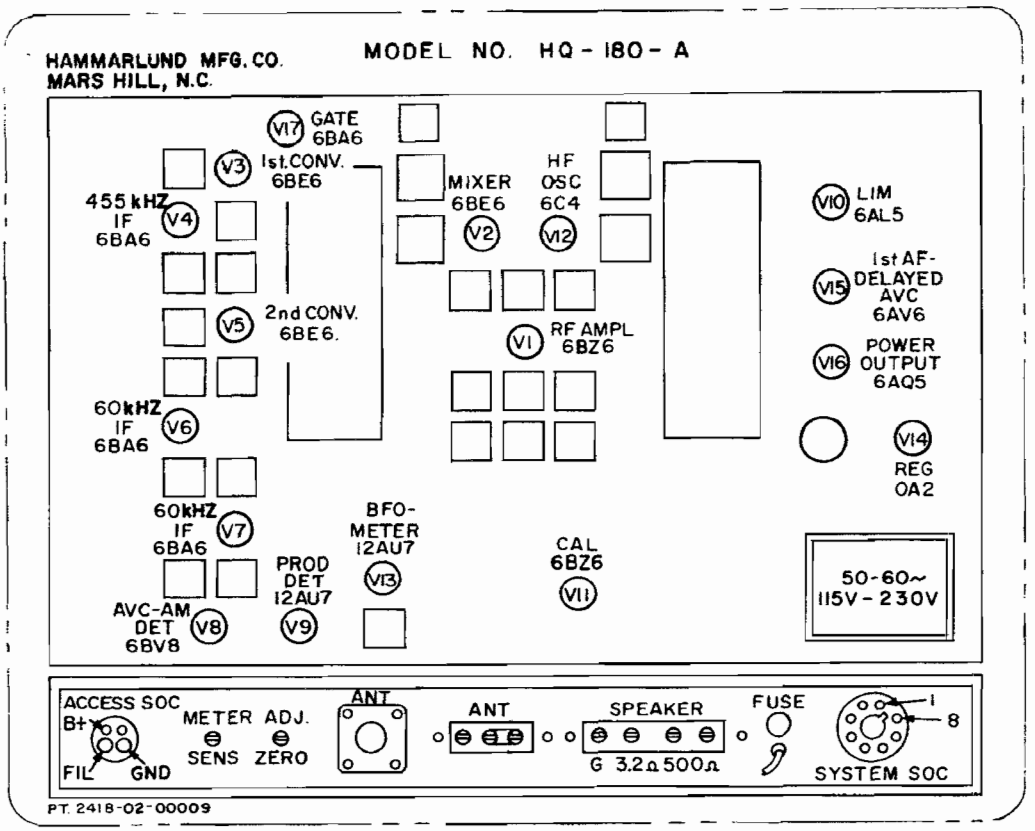

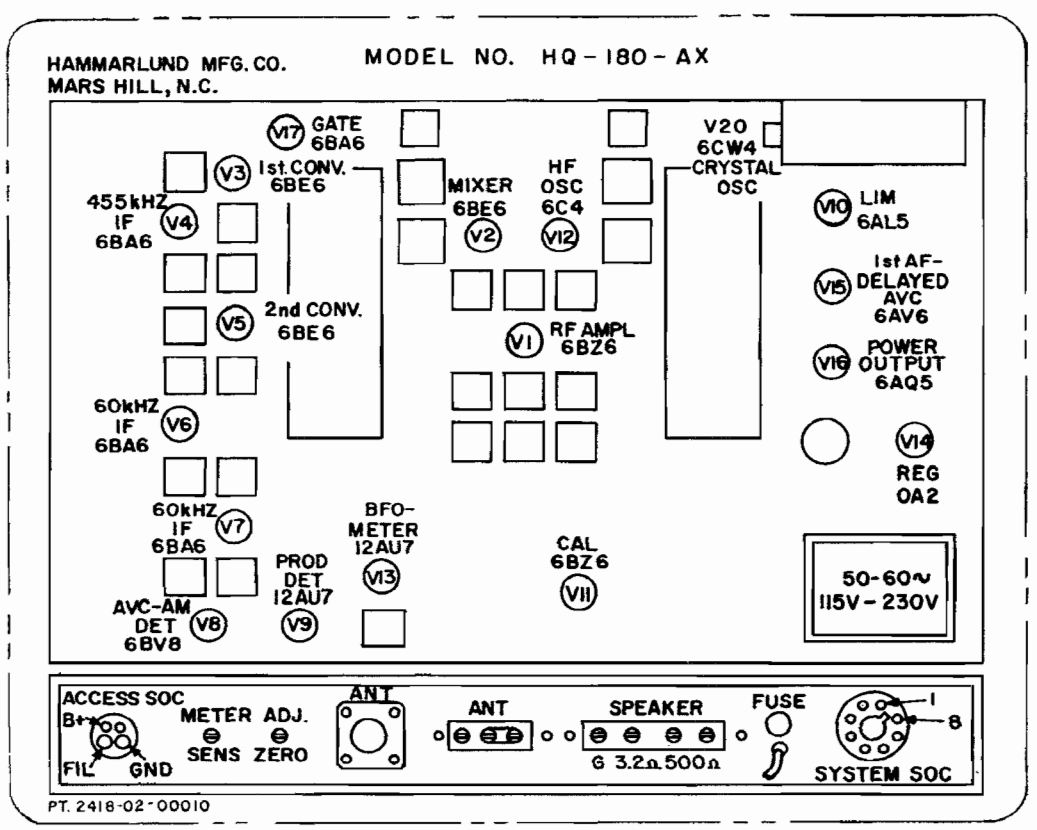

FIG.17 TUBE LOCATION LABELS

HQ-180-A

TABLE 1 TUBE SOCKET VOLTAGES

MEASURED WITH VTVM; 117 LINE VOLTS; NO ANTENNA; UNLESS OTHERWISE SPECIFIED, BAND AND DIAL 10 MC, AM, AVC OFF, 3 KC BOTH SIDEBANDS, REC., LIMITER OFF, RF GAIN MAX., AF GAIN MIN.

TUBE		SOCKET PIN NUMBERS								
		1	2	3	4	5	6	7	8	9
V 1	RF 6BZ6	0	1.5 RF 5.8 (min)	6.3 AC	0	245	105	0	--	--
V 2	Mixer #1 6BE6	-2.8 approx.	1.35	0	6.3 AC	245	110	0	--	--
V 3	Mixer #2 6BE6	-2.4 approx.	2	0	6.3 AC	250	74 0 (1 mc)	0	--	--
V 4	IF Amp 6BA6	0	0	6.3 AC	0	245	110	2.1 RF 29 (min)	--	--
V 5	Mixer #3 6BE6	-7.4 approx.	0	0	6.3 AC	250	84	0	--	--
V 6	IF Amp 6BA6	0	0	6.3 AC	0	240	83	1.0	--	--
V 7	IF Amp 6BA6	0	0	6.3 AC	0	230	82	1.0	--	--
V 8	DET AVC 6BV8	5	0	235	0	--	-.24	0	0	-4
V 9	Prod Det 12AU7	220 (SSB)	0	7.0 (SSB)	6.3 AC	6.3 AC	100 (SSB)	0	7.0 (SSB)	0
V 10	Limiter 6AL5	36 (off) .24 (max)	30 (off) 0 (max)	0	6.3 AC	36 (off) .24 (max)	0	30 (off) 0 (max)	--	--
V 11	Cal 6BZ6	-60 (cal) approx.	9.0 (cal)	6.3 AC	0	75 (cal)	88 (cal)	9.0 (cal)	--	--
V 12	HF Osc. 6C4	130	--	6.3 AC	0	130	-6.0	0	--	--
V 13	BFO Meter 12AU7	80	0	3.7	6.3 AC	6.3 AC	200 (SSB)	125 (SSB)	125 (SSB)	0
V 14	Volt. Reg. OA2	150	--	--	--	150	--	--	--	--
V 15	AF AVC 6AV6	0	1.3	6.3 AC	0	0	0	115	--	--
V 16	Power Amp 6AQ5	0	13	6.3 AC	0	275	250	--	--	--
V 17	IF Gate 6BA6	0	0	6.3 AC	0	250	0 88 (1 mc)	.02 4 (1 mc)	--	--
Systems Socket		0	A.V.C.	105	105	0	0	0	6.3 V.A.C.	--
Ace Socket		0	0	300 v D.C.	6.3 V.A.C.	--	--	--	--	--

TABLE 2 TUBE SOCKET RESISTANCES

MEASURED WITH VT OHMETER; POWER PLUG AND ANTENNA DISCONNECTED; UNLESS OTHERWISE SPECIFIED, BAND AND 10 MC, AM, AVC OFF, 3 KC BOTH SIDEBANDS, REC., LIMITER OFF, RF GAIN MAX., AF GAIN MIN.

TUBE		SOCKET PIN NUMBERS								
		1	2	3	4	5	6	7	8	
V 1	RF 6BZ6	480K	180 RF 1.7K (min)	--	0	19K	44K	0	--	--
V 2	Mixer #1 6BE6	47K	160	0	--	21K	25K	0	--	--
V 3	Mixer #2 6BE6	100K	470	0	--	21K	45K Inf (1 mc)	1.8	--	--
V 4	IF Amp 6BA6	1.1 meg	0	--	0	19K	33K	180 RF 10K (min)	--	--
V 5	Mixer #3 6BE6	22K	.8	0	--	22K	44K	1.2 MEG	--	--
V 6	IF Amp 6BA6	1.47 MEG	0	--	0	19K	61K	68	--	--
V 7	IF Amp 6BA6	470K	0	--	0	20K	60K	68	--	--
V 8	Det. AVC 6BV8	560	17	30K	0	--	47K	70	0	4.7
V 9	Prod Det 12AU7	INF 20K (SSB)	470K	820	--	--	55K	100K	820	0
V 10	Limiter 6AL5	210K	1.4 MEG 200K (LIM ON)	0	--	220K	0	1.5 MEG 470K (LIM ON)	--	--
V 11	Cal. 6BZ6	470K	4.7K	--	0	INF 500K (CAL)	INF 110K (CAL)	4.7K	--	--
V 12	HF Osc 6C4	24K	--	--	0	24K	100K	27	--	--
V 13	BFO Meter 12AU7	17K	0	1K	--	---	INF 20K (SSB)	545K	47K	0
V 14	Volt. Reg. OA2	24K	--	--	--	24K	--	0	--	-
V 15	AF AVC 6AV6	50 Approx.	5.6K	--	0	235K	235K	540K	--	-
V 16	Power Amp 6AQ5	500K	430	--	0	22K	21K	500K	--	-
V 17	IF Gate 6BA6	1.1 MEG	0	--	0	21K	INF 61K (MC)	1K	--	
Systems Socket		0	2.2 MEG	B + 20K	B + 20K	0	∞	0	0	
Ace Socket		0	∞	B + 20K	0					

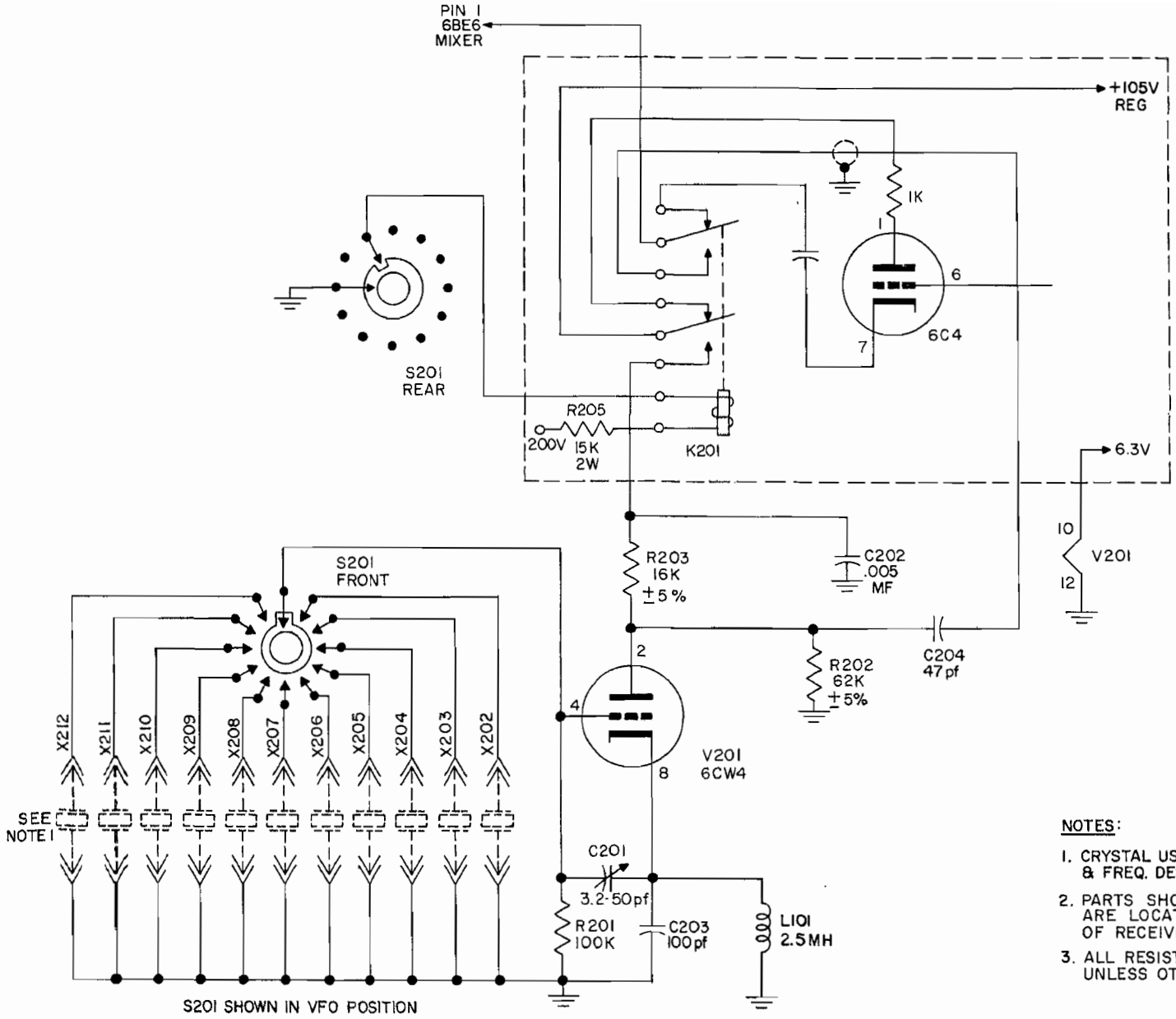

NOTES:

1. CRYSTAL USED DEPENDS ON BAND & FREQ. DESIRED.
2. PARTS SHOWN INSIDE DOTTED AREA ARE LOCATED ON MAIN CHASSIS OF RECEIVER.
3. ALL RESISTORS ARE 1/2 W ± 10% UNLESS OTHERWISE SPECIFIED.

FREQUENCY CONTROL UNIT DIAGRAM

FIG. 18

HQ-180A
PARTS LIST

ITEM	HAMMARLUND PART NO.	DESCRIPTION
C1, A-C	9441-60-40011	Capacitor, Variable, Main Tuning
C2, A-I	9441-60-40013	Capacitor, Variable, Band-spread Tuning
C3, 8, 31, & 157	1519-01-00001	Capacitor, Fixed, Silver Dur Mica DM-15, 100 pf, 500 W.V.D.C.
C4, 5, 7, 9, 10, 11, 15, 17, 18, 21, 32, 41, 47, 75, 76, 124, 130, 133, 135, 158 152	1509-01-01011	Capacitor, Fixed, Ceramic Disc, .01 uf, 600 W.V.D.C.
C12, 33, 36, 38, 40, 46, 136 & 137	1509-01-01002	Capacitor, Fixed, Ceramic Disc, .02 uf, 600 W.V.D.C.
C13, 89, 97 111, 113, 120 & 123	1519-01-00010	Capacitor, Fixed, Silver Dur Mica, DM-15, 20 pf, 500 W.V.D.C.
C14	1519-01-03004	Capacitor, Fixed, Silver Dur Mica, DM-15, 560 pf, 500 W.V.D.C.
C16, 93, 101, 103 & 114	1519-01-00011	Capacitor, Fixed, Silver Dur Mica, DM-15, 3 pf, 500 W.V.D.C.
C19, 20 & 85	1509-01-01005	Capacitor, Fixed, Ceramic Disc, .04 uf, 600 W.V.D.C.
C22 & 27	1509-01-01014	Capacitor, Fixed, Ceramic Disc, .01 uf, 10%, 1000 W.V.D.C.
C23	1519-02-00022	Capacitor, Fixed, Silver Dur Mica, DM-15, 15 pf 300 W.V.D.C.
C24	1519-01-03003	Capacitor, Fixed, Silver Dur Mica, DM-15, 1200 pf 500 W.V.D.C.
C25	1528-01-00001	Capacitor, Fixed, Mylar, .033 uf, 200 W.V.D.C.
C26	1501-01-00020	Capacitor, Variable, Slot Tuning
C28, 104, 110, 115, 117 & 122	1519-01-00017	Capacitor, Fixed, Silver Dur Mica, DM-15, 7 pf 500 W.V.D.C.
C29	1519-01-00026	Capacitor, Fixed, Dur Mica, DM-15, 780 pf, 500 W.V.D.C. Silver
C30, 63, 64, 78 & 143	1519-01-00031	Capacitor, Fixed, Silver Dur Mica, DM-15, 47 pf 300 W.V.D.C.
C34 & 37	1519-01-00005	Capacitor, Fixed, Silver Dur Mica, DM-15, 24 pf 500 W.V.D.C.
C35	1509-01-00008	Capacitor, Fixed, Ceramic Disc, Temp. Comp. 330N750
C39 & 42	1509-01-01006	Capacitor, Fixed, Ceramic Disc, 500 pf, 1000 W.V.D.C.
C43 & C162	1519-01-00006	Capacitor, Fixed, Silver Dur Mica, DM-15, 10 pf 500 W.V.D.C.
C44 & 45	1509-01-01010	Capacitor, Fixed, Ceramic Disc, .002 uf, 1000 W.V.D.C.
C48, 87 & 131	1523-01-01002	Capacitor, Fixed, Dur Paper .1 uf, 200 W.V.D.C.
C49, 95 & 105	1523-01-01001	Capacitor, Fixed, Dur Paper .047 uf, 400 W.V.D.C.
C50	1513-01-00002	Capacitor, Variable, Calibrator 8 - 50 pf
C51	1519-02-00060	Capacitor, Dur Mica, DM-15 68 pf, 500V
C52	9434-45-40038	Capacitor, Variable, Antenna Tuning
C53, 54, 55, 56, 57, & 58	1521-01-00003	Capacitor, Variable, Mica Trimmer, 1.5 to 20 pf
C59	1509-01-00016	Capacitor, Fixed, Ceramic Disc, Temp. Comp. 27N470
C60	1509-02-00015	Capacitor, Fixed, Ceramic Disc, Temp. Comp. 27N220
C61	1509-01-00013	Capacitor, Fixed, Ceramic Disc, Temp. Comp. 27N470
C62	1509-02-00014	Capacitor, Fixed, Ceramic Disc, Temp. Comp. 27N750
C65	1519-02-00033	Capacitor, Fixed, Silver Dur Mica, DM-15, 60 pf 300 W.V.D.C.
C66	1519-01-00002	Capacitor, Fixed, Silver Dur Mica, DM-15, 85 pf 500 W.V.D.C.
C67	1519-02-00034	Capacitor, Fixed, Silver Dur Mica, DM-15, 150 pf 300 W.V.D.C.
C68 & 80 & C160	1519-01-00007	Capacitor, Fixed, Silver Dur Mica, DM-15, 220 pf 500 W.V.D.C.
C69	1519-02-00036	Capacitor, Fixed, Silver Dur Mica, DM-15, 180 pf 300 W.V.D.C.
C70	1519-02-00037	Capacitor, Fixed, Silver Dur Mica, DM-15, 333 pf 300 W.V.D.C.
C71	1519-02-00035	Capacitor, Fixed, Silver Dur Mica, DM-15, 673 pf 300 W.V.D.C.
C72	1519-02-03008	Capacitor, Fixed, Silver Dur Mica, DM-15, 1030 pf 300 W.V.D.C.
C73	1519-02-00046	Capacitor, Fixed, Silver Dur Mica, DM-15, 363 pf 300 W.V.D.C.
C74	1519-02-00045	Capacitor, Fixed, Silver Dur Mica, DM-15, 438 pf 300 W.V.D.C.
C77	1509-02-00019	Capacitor, Fixed, Ceramic Disc, Temp. Comp. 100N470
C79	1501-01-00009	Capacitor, Variable, Crystal Phasing 1.5 - 9.1 pf
C81	1519-01-03005	Capacitor, Fixed, Silver Dur Mica, DM-15, 1000 pf 300 W.V.D.C.
C82, A-C	1517-01-00003	Capacitor, Fixed, Electrolytic, 60-40-40-40 uf

PARTS LIST (Continued)

ITEM	HAMMARLUND PART NO.	DESCRIPTION
C83 & 84	1509-01-00015	Capacitor, Fixed, Ceramic Disc, .01 uf, 1400 W.V.D.C.
C86 & 94	1519-01-00008	Capacitor, Fixed, Silver Dur Mica, DM-15, 31 pf 500 W.V.D.C.
C88, 90, 96 & 98	1519-01-00009	Capacitor, Fixed, Silver Dur Mica, DM-15, 29 pf 500 W.V.D.C.
C91 & 99	1519-01-00012	Capacitor, Fixed, Silver Dur Mica, DM-15, 28 pf 500 W.V.D.C.
C92 & 100	1519-01-00013	Capacitor, Fixed, Silver Dur Mica, DM-15, 27 pf 500 W.V.D.C.
C102, 109, 118, 153, 154 & 155	1519-01-00014	Capacitor, Fixed, Silver Dur Mica, DM-15, 9 pf 500 W.V.D.C.
C106	1519-01-00015	Capacitor, Fixed, Silver Dur Mica, DM-15, 10 pf 500 W.V.D.C.
C107 & 116	1519-01-00018	Capacitor, Fixed, Silver Dur Mica, DM-15, 14 pf 500 W.V.D.C.
C108 & 119	1519-01-00019	Capacitor, Fixed, Silver Dur Mica, DM-15, 21 pf 500 W.V.D.C.
C112 & 121	1519-01-00016	Capacitor, Fixed, Silver Dur Mica, DM-15, 16 pf 500 W.V.D.C.
C125	1519-01-00004	Capacitor, Fixed, Silver Dur Mica, DM-15, 47 pf 500 W.V.D.C.
C126 & 127	1528-01-00002	Capacitor, Fixed, Mylar .01 uf, 500 W.V.D.C.
C128	1509-01-01019	Capacitor, Fixed, Ceramic Disc,.001 uf, 500 W.V.D.C.
C129	9411-73-00009	Capacitor, Variable, BFO 100 pf
C132	1509-01-01003	Capacitor, Fixed, Ceramic Disc, .005 uf, 1000 W.V.D.C.
C134	1519-01-00024	Capacitor, Fixed, Silver Dur Mica, DM-15, 2 pf 500 W.V.D.C.
C138	1509-01-02001	Capacitor, Fixed, Ceramic Temp. Comp. 47N750
C139 & 141	1509-01-01001	Capacitor, Disc Ceramic, .01 uf 600 V
C140	1515-01-02001	Capacitor, Fixed, Electrolytic, 20 uf, 25 W.V.D.C.
C142	1509-02-00017	Capacitor, Fixed, Ceramic Disc, Temp. Comp. 440N750
C144, 145, 146, 147, 148 & 149	1527-01-00002	Capacitor, Variable, Cylindrical Trimmer, 1-8 pf
C150	1509-01-00004	Capacitor, Fixed, Ceramic Disc, Temp. Comp. 110N750
C151	1509-02-00018	Capacitor, Fixed, Ceramic Disc, Temp. Comp. 500N1500
C156	1501-02-00018	Capacitor, Variable, Vernier Tuning, 24 pf
C159	1515-02-04003	Capacitor, Electrolytic, 25 uf 25 V
	2411-01-00005	Crystal panel, Clock window
CMC	2212-06-00002	Clock, Telechron auto-timer (50 cycle operation)
CR2 & 3	4807-01-00001	Rectifier, Silicon (CER72C)
CR4	4823-02-00001	Diode 1N34A

ITEM	HAMMARLUND PART NO.	DESCRIPTION
E1	5136-01-00002	Fuse, Holder
F1	5134-01-00204	Fuse, 3 Amp. Type 3 AGC for 115 V operation
F1	5134-01-00202	Fuse, 1½ Amp. Type 1½ AGC for 230 V operation
I1, 2 & 3	3901-01-00001	Lamp, pilot, No.47, 6.3V .15 A
J1 & 5	2126-01-00009	Socket (8 Pin)
J2	2109-01-00001	Phone Jack
J3	2111-01-00001	Antenna Connector, SO-239
J4	2102-01-00013	Connector, Female
K1	4512-01-00001	Relay, 5 Amps.
L1, 9, & 10	1802-01-00001	RF Choke, 2.5 mH
L2	1804-01-00162	Bifilar Coil
L3	1803-01-00106	Slot Filter Coil
L4	1803-01-00051	Passband Tuning Coil
L5, 7 & 8	1801-01-00001	RF Choke, 330 mH
L6	5627-01-00004	Filter Choke, 8.0 H
M1	2902-01-00003	Meter "S" (carrier level)
R1, 16, 41, 82, & 95	4703-01-00344	Resistor, 10K Ω, 1/2 W,10%
R2, 9, 12, 17 & 62	4703-01-00332	Resistor, 1K Ω, 1/2 W, 10%
R3	4704-01-00642	Resistor, 6.8K Ω, 1 W, 10%
R4	4703-01-00308	Resistor, 10Ω, 1/2 W, 10%
R5, 14 & 80	4703-02-00429	Resistor, 180Ω, 1/2 W, 5%
R6	4735-01-16000	Resistor, Variable, 1.5K Ω, dual with R15 and S3
R7, 42, 49, 65, 70, 72, 73, 75, 84, & 100	4703-01-00352	Resistor, 47K Ω, 1/2 W,10%
R8	4703-02-00428	Resistor, 160Ω, 1/2 W, 5%
R10, 13, 27, 36, 40, 51, 74 & 107	4703-01-00356	Resistor, 100K Ω, 1/2 W,10%
R11, 29, 97 & 101	4703-01-00348	Resistor, 22K Ω, 1/2 W, 10%
R15		Resistor, Variable, 10K Ω, Part of R6
R18	4705-01-00952	Resistor, 47K Ω, 2 W, 10%
R19	4735-01-00404	Resistor, Variable, 1.5K Ω, Meter Sens Adj.
R20	4735-01-00404	Resistor, Variable, 1.5K Ω, Meter Zero Adj.
R21	4704-01-00648	Resistor, 22K Ω, 1 W, 10%
R22	4703-01-00328	Resistor, 470 Ω, 1/2 W,10%
R23 & 44	4703-01-00368	Resistor, 1 megΩ, 1/2 W,10%
R24	4703-02-00425	Resistor, 120Ω, 1/2 W, 5%
R25	4703-02-00413	Resistor, 39Ω, 1/2 W, 5%
R26	4735-01-00201	Resistor, Variable, 200Ω Slot Depth
R28, 43, 45, 48, 68 & 71	4703-01-00360	Resistor, 220K Ω, 1/2 W,10%
R30, 32, 37, 46, 76, 85, 91, 93 & 104	4703-01-00364	Resistor, 470K Ω, 1/2 W, 10%
R31	4703-01-00318	Resistor, 68Ω, 1/2 W, 10%
R33	4703-02-00437	Resistor, 390Ω, 1/2 W, 5%
R34	4703-01-00329	Resistor, 560Ω, 1/2 W, 10%

PARTS LIST (Continued)

ITEM	HAMMARLUND PART NO.	DESCRIPTION
R35	4704-01-00632	Resistor, 1K Ω, 1 W, 10%
R39	4703-01-00331	Resistor, 820Ω, 1/2 W, 10%
R47	4703-01-00336	Resistor, 2.2K Ω, 1/2 W,10%
R50	4703-02-00406	Resistor, 20Ω, 1/2 W, 5%
R52	4703-02-00399	Resistor, 10Ω, 1/2 W, 5%
R53	4714-01-01002	Resistor, 4K Ω, 10 W, 10%
R54	4703-01-00330	Resistor, 680Ω, 1/2 W,10%
R55	4703-02-00458	Resistor, 3K Ω, 1/2 W, 5%
R56	4703-01-00346	Resistor, 15K Ω, 1/2 W,10%
R57	4703-01-00342	Resistor, 6.8K Ω, 1/2W,10%
R58	4705-01-00949	Resistor, 27K Ω, 2 W, 10%
R59, 63, 69 & 99	4703-01-00336	Resistor, 2.2K Ω, 1/2 W,10%
R60, & 66	4703-01-00362	Resistor, 330K Ω, 1/2 W,10%
R61, & 67	4703-01-00367	Resistor, 820K Ω, 1/2 W,10%
R64	4703-01-00325	Resistor, 270Ω, 1/2 W, 10%
R77	4703-01-00313	Resistor, 27Ω, 1/2 W, 10%
R78	4735-01-08001	Resistor, Variable, 500K Ω Limiter includes 61
R79	4735-01-00002	Resistor, Variable, 1 megΩ Audio Gain
R81	4704-01-00634	Resistor, 1.5K, 1W, 10%
R83, & 113	4703-01-00376	Resistor, 4.7 megΩ, 1/2W,10%
R86	4704-02-00738	Resistor, 430 Ω, 1 W, 5%
R87, & 98	4703-01-00328	Resistor, 470Ω, 1/2 W, 10%
R88	4703-01-00337	Resistor, 2.7K Ω, 1/2 W,10%
R89	4703-02-00466	Resistor, 6.2K Ω, 1/2 W, 5%
R90	4703-01-00460	Resistor, 3.6K Ω, 1/2 W, 5%
R92	4703-01-00341	Resistor, 5.6K Ω, 1/2 W,10%
R94	4703-02-00419	Resistor, 68Ω, 1/2 W, 5%
R96	4703-01-00340	Resistor, 4.7K Ω, 1/2 W,10%
R102, & 112	4703-01-00372	Resistor, 2.2 megΩ, 1/2W,10%
R103	4704-02-00774	Resistor, 13K Ω, 1 W, 10%
R105	4703-02-00472	Resistor, 11K Ω, 1/2 W, 5%
R111	4704-01-00612	Resistor, Fixed, 22Ω, +10%,1W
S1		Noise Limiter, ON-OFF (Part of R78) Switch
S2A	5105-02-00016	Switch Wafer, Ant. primary
S2B, C	5105-02-00015	Switch Wafer, Ant. sec. mixer grid
S2D	5105-02-00014	Switch Wafer, RF Plate
S2E	5108-02-00002	HF Oscillator Switch Assem.
S2F & G		(Included in S2E)
S3		AC ON-OFF (Part of R6 and R15) Switch
S4	5106-02-00010	Send-Receive-Calibrate Switch
S5	5110-01-00001	Selectivity Switch
S6	5109-01-00001	Sideband Switch
S7	5107-02-00003	AM-SSB-CW Switch
S8	5106-01-00013	AVC Switch
T1	1814-02-00002	Transformer, Mixer Plate 3035 and 455 kHz
T2	1810-02-00003	Transformer, IF, Crystal Grid
T3	1811-01-00019	Transformer, IF, 355 kHz
T4 & 5	1811-01-00020	Transformer, IF, 455 kHz
T6, 7, 8, 9, 10 & 11	1802-01-00100	Transformer, IF, 60 kHz
T12	1809-02-00001	Transformer, Antenna, .54 to 1.05 MHz
T13	1809-02-00002	Antenna Transformer, 1.05 to 2.05 MHz
T14	1810-02-00001	Antenna Transformer, 2.05 to 4.04 MHz
T15	1811-02-00001	Antenna Transformer, 4.0 to 7.85 MHz
T16	1811-02-00002	Antenna Transformer, 7.85 to 15.35 MHz
T17	1812-02-00001	Antenna Transformer, 15.35 to 30 MHz
T18	5603-01-00002	Power Transformer
T19	1814-02-00003	RF Transformer, .54 to 1.05 and 1.05 to 2.05 MHz
T20	1814-02-00004	RF Transformer, 2.05 to 4.04 and 4.0 to 7.85 MHz
T21	1814-02-00005	RF Transformer, 7.85 to 15.35 and 15.35 to 30 MHz
T22	5602-01-00003	Filament Transformer
T23	1809-02-00003	Osc. Coils, .54 to 1.05 and 1.05 to 2.05 MHz
T24	1810-02-00002	Osc. Coils, 2.05 to 4.04 MHz
T25	1811-02-00003	Osc. Coils, 4.0 to 7.85 MHz
T26	1811-02-00004	Osc. Coils, 7.85 to 15.35 MHz
T27	1812-02-00002	Osc. Coils, 15.35 to 30 MHz
T28	1802-01-00101	BPO Transformer, 60 kHz
T29	5618-01-00003	Audio Output Transformer
Y1	2304-01-00004	Quartz Crystal, 2.580 MHz
Y2	2305-01-00061	Quartz Crystal, 100.0 kHz
Y3	2304-02-00010	Crystal, 3035 kHz
Z1	1711-01-00003	RC Printed Network (Calibrator)
Z2	1711-01-00001	RC Printed Network (Audio)

OPTIONAL ACCESSORIES

		Telechron Clock Assembly Conversion Kits including instructions for converting Model HQ-180-C are listed as follows:
	9207-00-00052	24 Hour Clock Kit (115V/230V - 50 cycles)
	9207-00-00053	24 Hour Clock Kit (11V/230V - 60 cycles)
	9210-00-00011	Loudspeaker assembly in cabinet matched to the models HQ-180, HQ-180-C and HQ-180-E

NOTES

ADDENDUM TO INSTRUCTION MANUAL 9001-06-00001
ISSUE 4 (February 1970)

THIS ADDENDUM IS TO BE USED WITH HQ-180A RECEIVERS SUPPLIED THE UNITED STATES NAVY UNDER CONTRACT #N00123-70-C-0114.

The following changes or additions should be made in the instruction manual for the HQ-180A Communications Receiver:

Pages 10 and 11

The wiring of J1, the systems socket, has been changed to accomodate the M-23 modification and the wiring is no longer as shown in Figures 4 and 5. Refer to page 5 of this addendum for the revised wiring of J1. When J1 is wired for use with the M-23 modification it normally would not be used for interconnecting the HQ-180A with a transmitter unless special cable configurations are used.

Page 13

Delete paragraph 2.2.3 "S" Meter (Index #3) and add the following:
2.2.3 Meter (Index #3).
The meter is used to indicate a change in signal strength. With the M-23 cable assembly connected to a variable DC "Slide Back" voltage source and a 1.0 microvolt signal injected at the antenna input, the voltage source is adjusted for 0 meter reading. A change of +1 db or -1 db in the strength of the signal will produce a +4 or -4 minor division change respectively on the meter.

Pages 17, 42, 43, 45 and 50

Figures are incorrect in that a "S" meter is shown in the figures rather than the meter used in the M-23 modification.

Pages 18 and 19

In paragraph 2.3, 2.4 and 2.5 the last sentence should be changed to read: Use the meter to indicate the maximum signal when tuning the main tuning dial and peaking the antenna, an increase in signal strength will move the meter in a + direction.

Page 28

The "S" meter should be removed from the block diagram for the HQ-180A Receiver and the HQ-180AX Receiver.

Page 35

The "S" meter should be taken off the schematic. R19, and the wiper of R20 left open.

Page 51

Add paragraph 4.8.1.

4.8.1 Alignment of 455 kHz IF rejection

The receiver must be set up for reception at 540 kHz. Connect a 455 kHz signal to the antenna input. By monitoring either the AVC as in the IF alignment or by listening tune L901 for minimum reception of the 455 kHz signal.

Page 54

Delete paragraph 4.10 "S" Meter Adjustment. Add new paragraph.

4.10 Meter Adjustment

With the receiver turned off the pointer must indicate 0 on the meter scale. Turn the receiver on, and allow ½ hour warm up.

Apply a 1.0 microvolt signal to the antenna input at any frequency within the range of the receiver and connect a variable DC slide-back voltage source, through M-23 cable assembly, to J1. Adjust the slide-back voltage for zero meter reading.

With the meter set up as above a +1 db or -1 db change in the level of the input signal will produce a +4 or -4 minor division change in the meter reading respectively.

Page 62

1. Add capacitor C901 after C159.
   C901 = 1519-01-03001, Capacitor, DM-19, 1100pf, 2%
2. Add capacitor C902 after C901
   C902 = 1509-01-01017, Capacitor, Disc Ceramic, .01uf
3. Change J3 from 2111-01-00001 antenna connector SO-239 to 2111-02-00016, antenna connector UG-58A/U.
4. Add Coil L901 after L6
   L901 = 1803-01-00106, Coil, IF rejection tuning.
5. Change meter M1 from 2902-01-00003 meter "S" (carrier level) to SKA-0186 meter (Simpson 4306 modified).

Page 63

1. Change resistor R53 from 4714-01-01002 resistor 4KΩ, 10 watts, 10% to 4714-01-01001 resistor 3KΩ, 10 watts, 10%.
2. Add resistor R901 after R111
   R901 = 4703-02-00416, Resistor, 51Ω, 5%, ½ watt
3. Add resistor R902 after R901
   R902 = 4703-01-00356, Resistor, 100KΩ, 10%, ½ watt
4. Add M-23 cable assembly as optional accessory part number SKB-0185.

HQ-180A SCHEMATIC REVISIONS

The schematic diagram as it appears in the HQ-180A manual should be changed to agree with the sketches below if the receiver was supplied to the United States Navy under Contract N00123-70-C-0114 and contains U.S. Navy M-23 modification.

LEGEND: Normal Wiring ———————

Wiring Removed - - - - - - - -

Wiring Added ———————

(A)

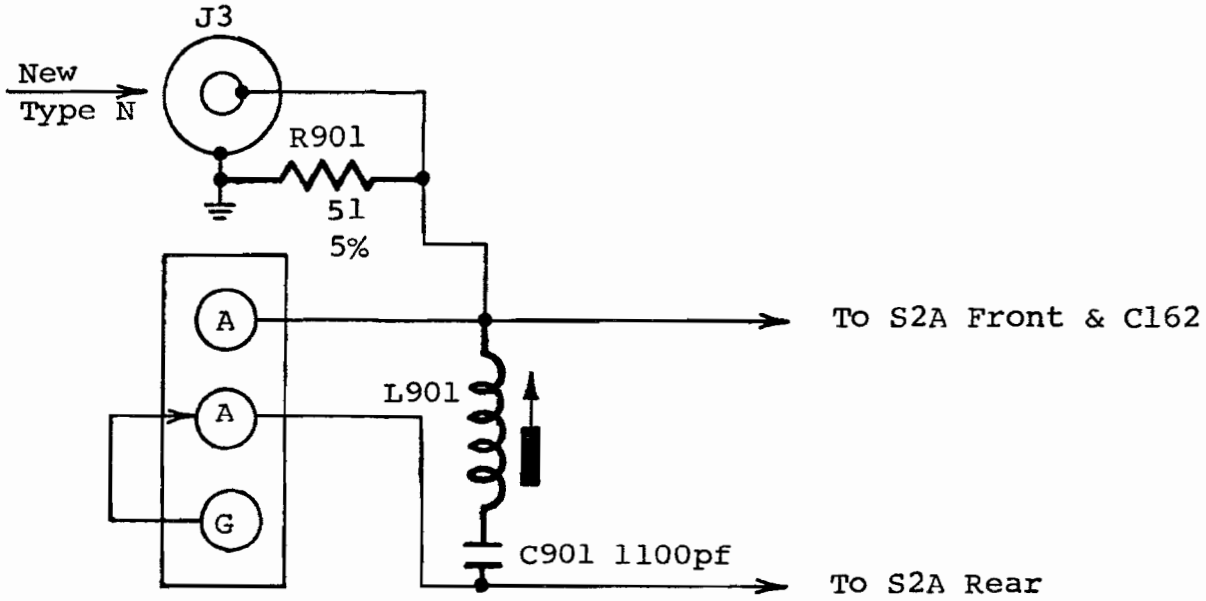

(B)

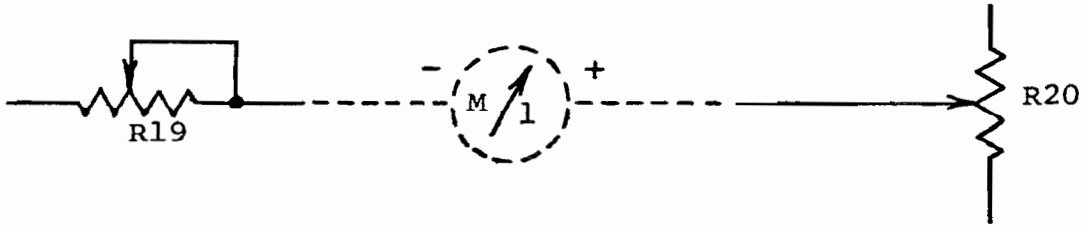

(C.)

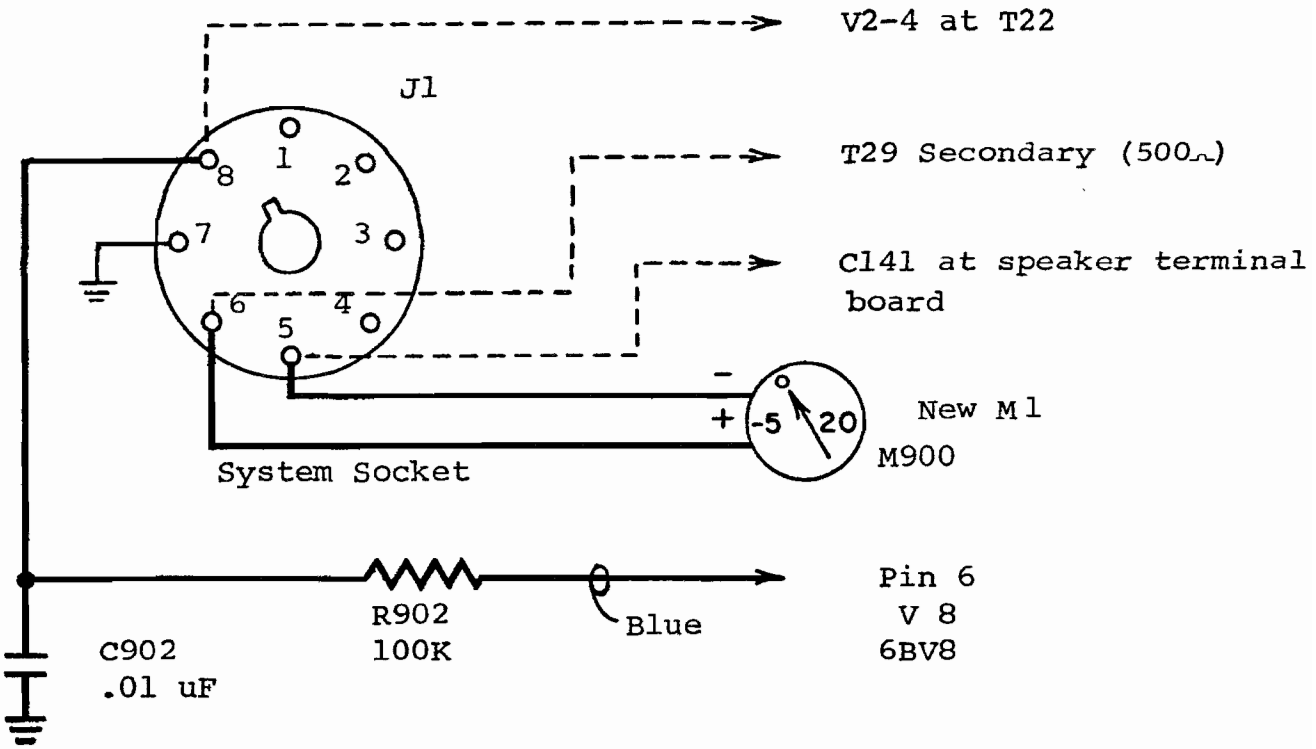

(D.)

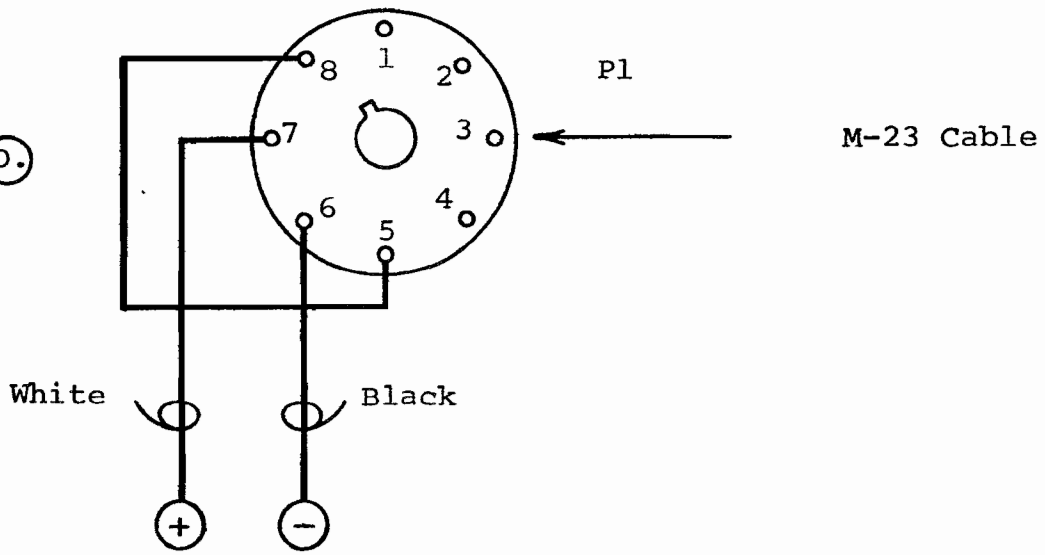

(E.) NOTE: Change R53 from 4K to 3K

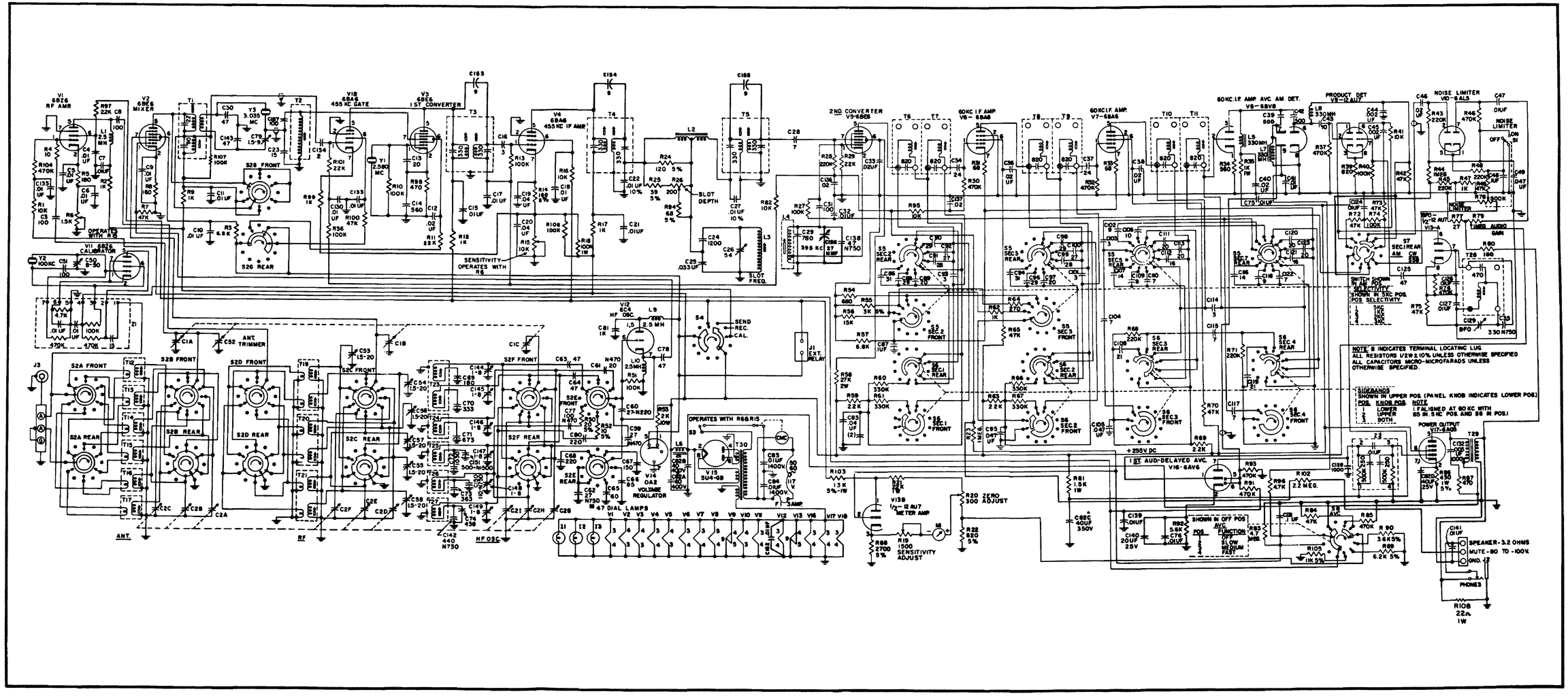

FIG.20 CIRCUIT DIAGRAM OF RECEIVER HQ-180

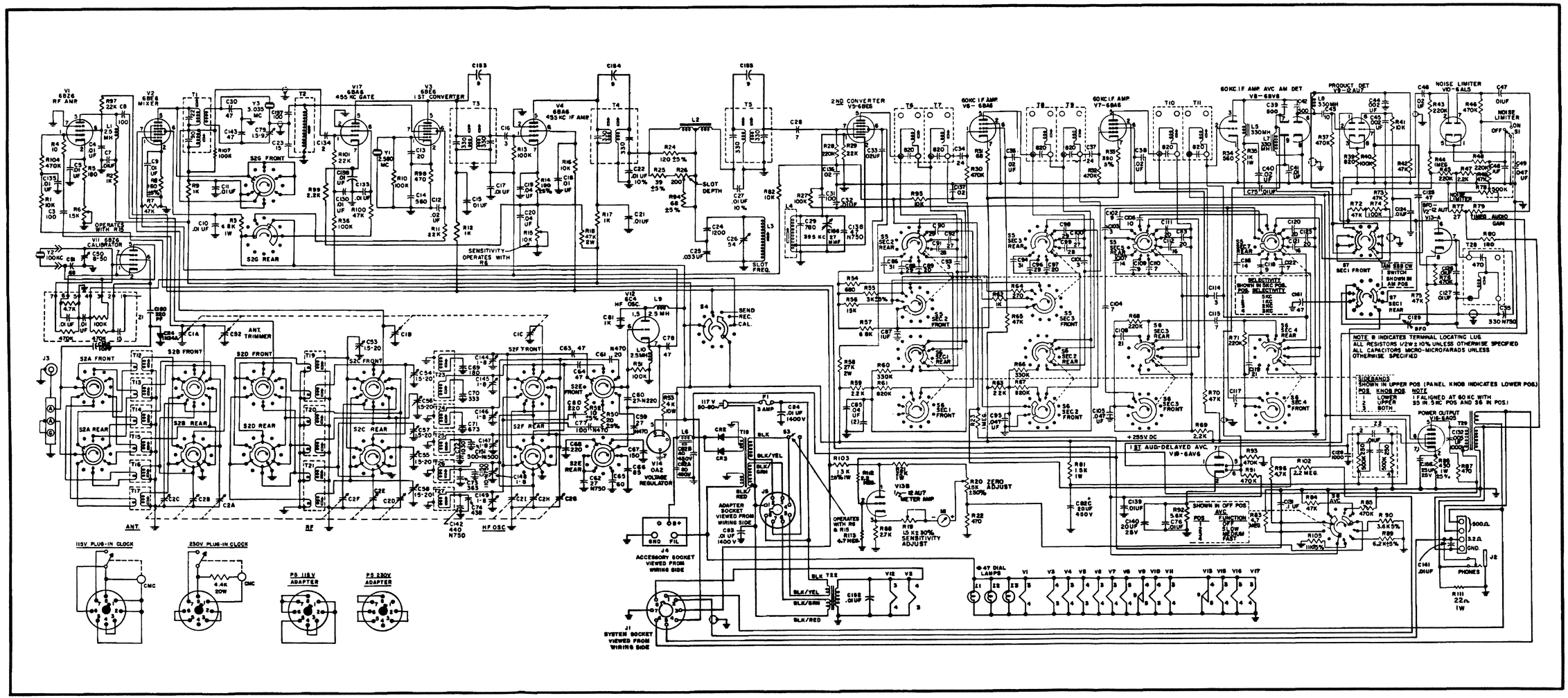

FIG.19 CIRCUIT DIAGRAM OF RECEIVER HQ-180A

THE HAMMARLUND MANUFACTURING COMPANY INCORPORATED

Standard Warranty

The Hammarlund Manufacturing Company, warrants this equipment to be free from defects in workmanship and materials under normal and proper use and service for the uses and purposes for which it is designed, and agrees to repair or replace, without charge, all parts thereof showing such defects which are returned for inspection to the Company's factory, transportation prepaid, within a period of 90 days from date of delivery, provided such inspection discloses to the satisfaction of the Company that the defects are as claimed, and provided also, that the equipment has not been altered, repaired, subjected to misuse, negligence or accident, or damaged by lightning, excessive current or otherwise, or had its serial number or any part thereof altered, defaced, or removed. Tubes shall be deemed to be covered by the manufacturers standard warranty applicable thereto, and such items shall be and are hereby excluded from the provisions of this warranty. Pilot lamps and fuses are not guaranteed for length of service.

Except as herein specifically provided, no warranty, express or implied, other than that of title, shall apply to any equipment sold hereunder. In no event shall the Company be liable for damages by reason of the failure of the equipment to function properly or for any consequential damages.

This warranty is valid for the original owner of the equipment, and is contingent upon receipt of the Warranty Registration Card by the Comapny. No equipment shall be returned to the factory for repairs under warranty unless written authorization is obtained from the Company, and the equipment is shipped prepaid by the owner. The Company maintains Authorized Service Stations, names and locations of which will be sent upon request of the owner.

With regard to FM Communications equipment, the performance of equipment and the liability of the Company under this warranty provision is contingent upon a systematic program of routine maintenance by a qualified communications technician, holding a first or second class Radio Telephone or Telegraph operators license in accordance with FCC regulations. The nature of electronic communication equipment is such that routine maintenance by a qualified technician is essential to reliable operation and minimized maintenance costs.

THE HAMMARLUND MANUFACTURING COMPANY INCORPORATED
73-88 Hammarlund Drive, Mars Hill, N.C. 28754
a subsidiary of Electronic Assistance Corporation

The policy of the Hammarlund Manufacturing Company is one of continued improvement in design and manufacture wherever possible, to provide the highest attainable quality and performance. Hence, specifications finishes, etc. are subject to change without notice and without assumption by Hammarlund of any obligation or responsibility to provide such features as may be changed, added or dropped from previous production runs of this equipment.

DO NOT MAKE ANY RETURNS WITHOUT AUTHORIZATION FROM THE FACTORY. ALL AUTHORIZED RETURNS SHOULD BE SHIPPED TO THE HAMMARLUND MANUFACTURING COMPANY INCORPORATED, ATTN: CUSTOMER SERVICE, MARS HILL, NORTH CAROLINA 28754