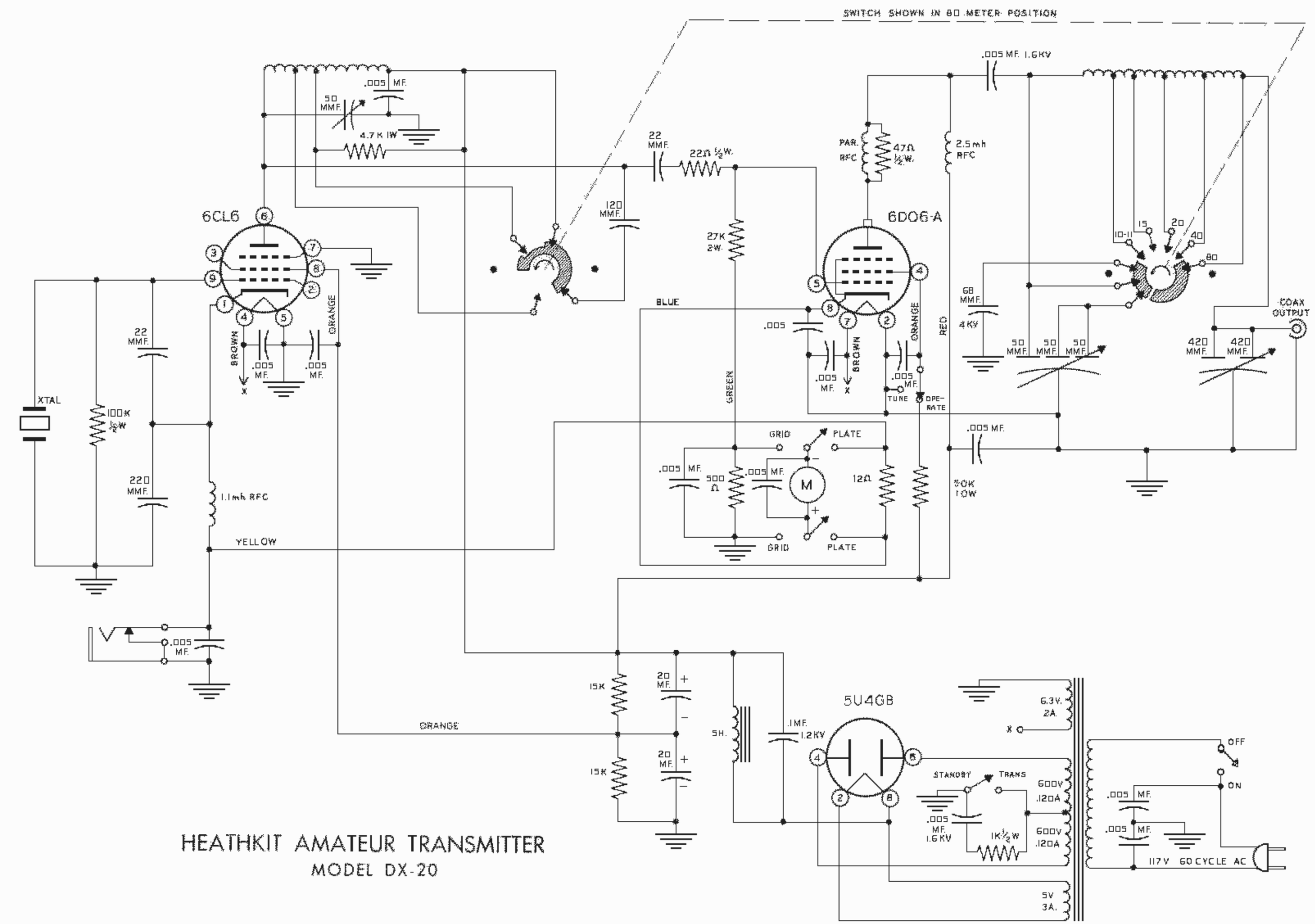

HEATHKIT AMATEUR TRANSMITTER

MODEL DX-20