PRICE 17/6

Assembling and Using Your...

Heathkit

DAYSTROM

"MOHICAN" COMMUNICATIONS RECEIVER

MODEL GC-1U

DAYSTROM LIMITED

A Subsidiary of the Daystrom Group,
Manufacturers of the world's finest
Electronic Equipment in Kit Form.

GLOUCESTER, ENGLAND

COLOUR CODE FOR FIXED RESISTORS - (B.S.1852-1952)
COLOUR BAND MARKING

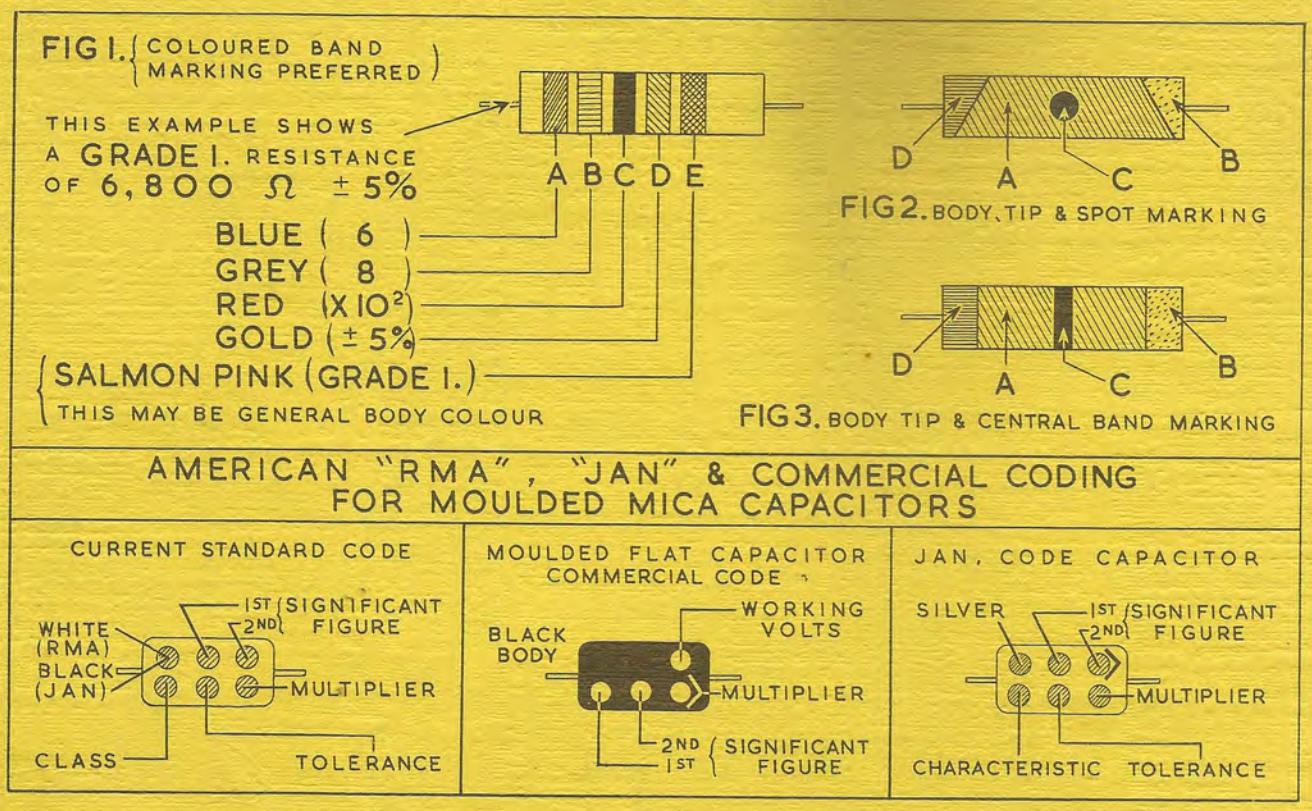

COLOUR CODE FOR RESISTORS AND CAPACITORS

Colour	Value in Ohms of pF for Cols. A, B & C.				COL. D. (TOLERANCE RATING)			CAPACITORS COL. E. TEMP. COEFFICIENT per 10^6 per °C.
	COL. A. 1st Figure	COL. B. 2nd Figure	COL. C. (MULTIPLIER) Resistors ohms	COL. C. (MULTIPLIER) Capacitors pF	Resistors	Ceramic Capacitors Up to 10 pF	Ceramic Capacitors Over 10 pF	
BLACK	-	0	1	1	-	2 pF	± 20%	0
BROWN	1	1	10	10	± 1%	0.1 pF	± 1%	-30
RED	2	2	100	100	± 2%	-	± 2%	-80
ORANGE	3	3	1,000	1,000		-	± 2.5%	-150
YELLOW	4	4	10,000	10,000		-	-	-220
GREEN	5	5	100,000	-		0.5 pF	± 5%	-330
BLUE	6	6	1,000,000	-		-	-	-470
VIOLET	7	7	10,000,000	-		-	-	-750
GREY	8	8	100,000,000	.01		0.25 pF	-	+30
WHITE	9	9	1,000,000,000	.1		1 pF	± 10%	+100
SILVER			.01	-	± 10%	-	-	
GOLD			.1	-	± 5%	-	-	
SALMON								
PINK			-	-	-	-	-	
NO "D" COLOUR			-	-	-	-	-	

The Colour coding should be read from left to right, in order, starting from the end and finishing near the middle.

Standard ± tolerances for resistors are:- Wire-wound: 1%, 2%, 5%, 10%. Composition, Grade 1: 1%, 2%, 5%. Grade 2: 5%, 10%, 20%. (20% is indicated by 4th (or 'D') colour). Grade 1: ("high-stability") composition resistors are distinguished by a salmon-pink fifth ring or body colour. (Reference: B.S.1852: 1952 B.S.I.).

N.B. High-Stability Resistors supplied with this kit are not as a rule colour coded but enamelled in one colour on which the value in Ohms is printed in figures. Capacitors supplied in this kit usually have their capacity clearly marked in figures. Some Capacitors coded as above also have additional "voltage rating" coding.

Assembly and Operation of the "MOHICAN" Communications Receiver

MODEL GC-1U

LIST OF CONTENTS

	PAGE
Circuit Diagram	2
Graphs	3
Specifications	5
Introduction	6
Circuit Description	7
Radio Frequency Amplifier	7
Mixer Section	8
Oscillator Section	9
455 Kc/s IF Amplifier & Detector	10
Audio Section	11
BFO	12
Construction Notes	12
Proper Soldering Techniques	13
Chassis Wiring and Soldering	14
Circuit Board Wiring and Soldering	15
Step-By-Step Assembly	16
IF and Audio Circuit Board Wiring	17
Parts Installation and Wiring Chassis Base Assembly	22
Front Panel & Dial Assembly	26
Front Panel Wiring	30
Dial Cord Assembly	32
Cabinet Assembly	40
Coil Pack Layout	41
Receiver Alignment	42
Preliminary Tests	42
Alignment of the IF Amplifier	42
Front End Alignment	43
Band A Alignment	43
Band B Alignment	44
Band C Alignment	44
Band D Alignment	45
Band E Alignment	46
BFO Alignment	46
Operation	47
Tuning AM Signals	48
Tuning SSB or CW Signals	49
Fixed Station Receiver	49
In Case of Difficulty	50
Introduction to Transistors	52
Glossary of Radio Terms	54
Replacements	56
Service	56
Guarantee	57
Parts Illustrated	58
Parts List	59

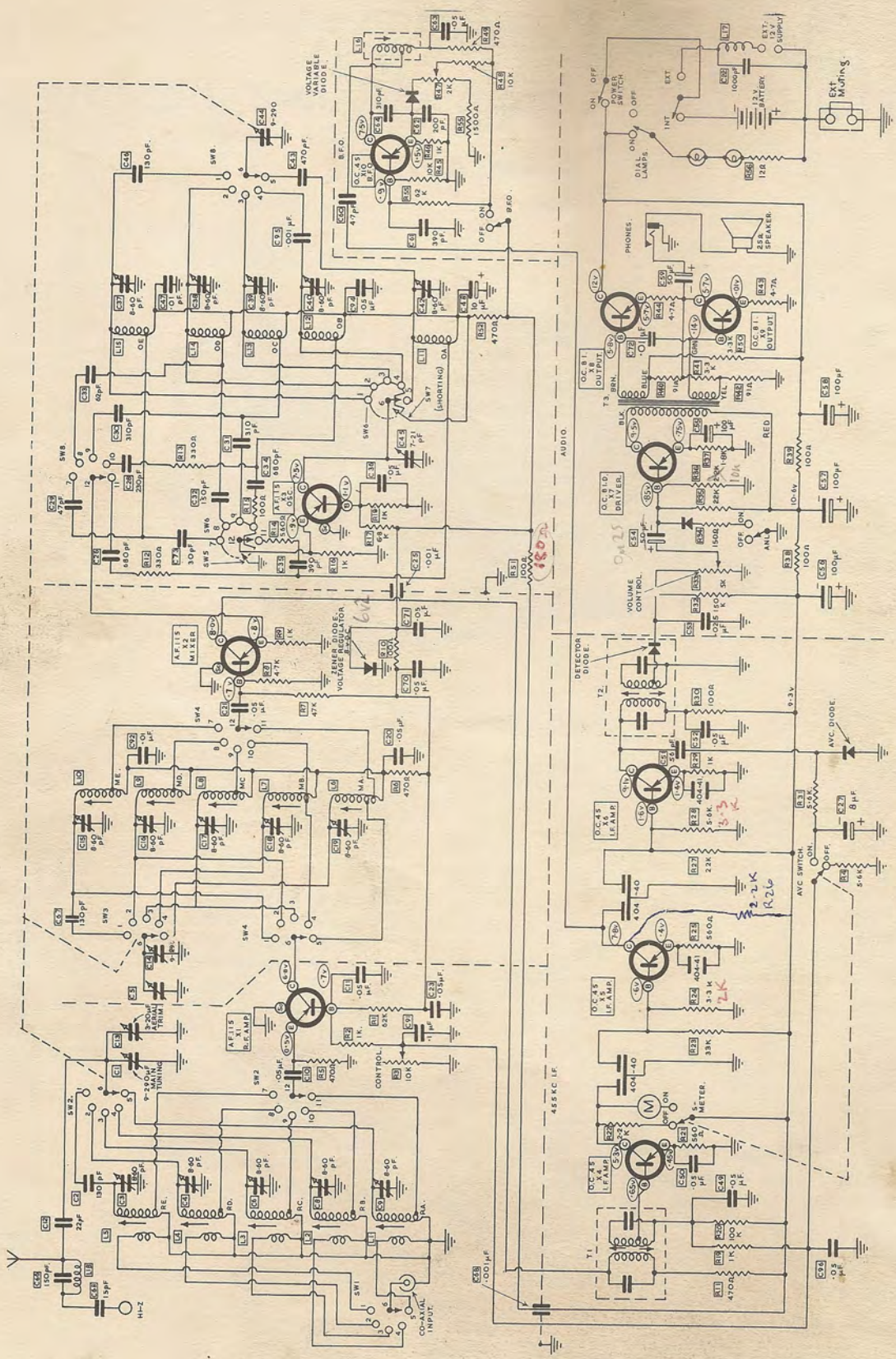

THE GC-1U CIRCUIT DIAGRAM.

(Component Values for Early Versions)

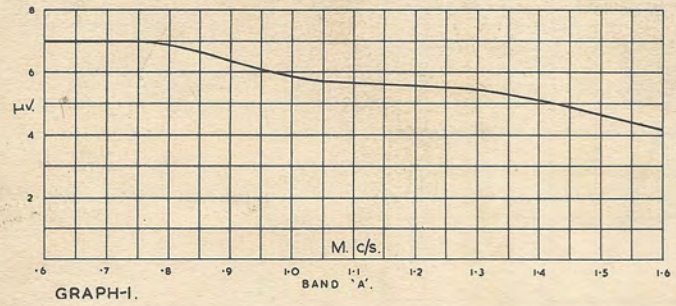

GRAPH-1.

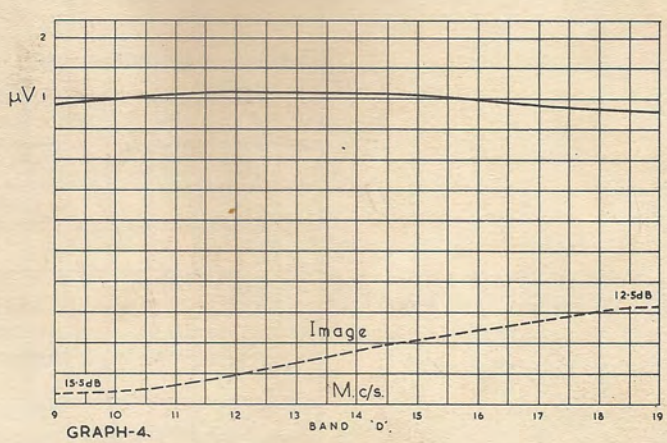

GRAPH-4.

fosc. on L.F. side of sig.

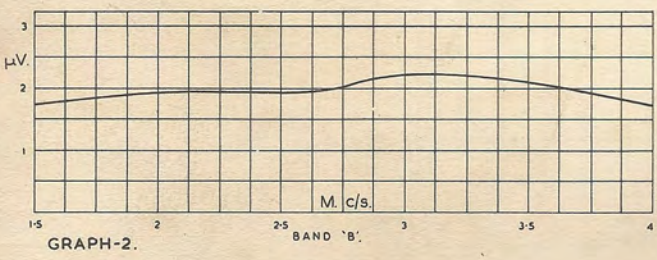

GRAPH-2.

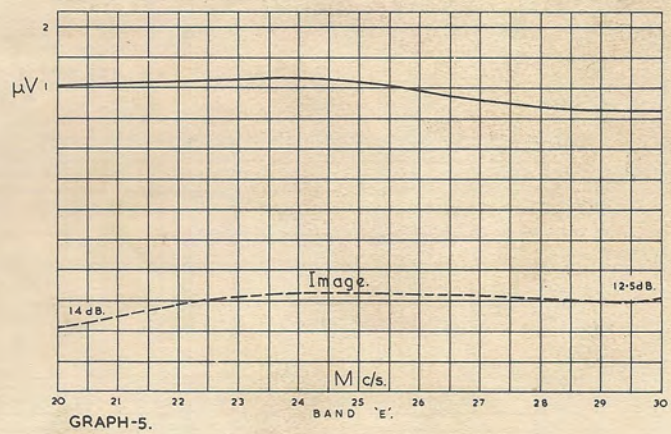

GRAPH-5.

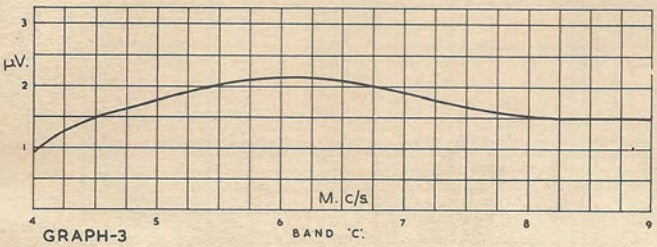

GRAPH-3

The above sensitivity curves are for an average "Mohican" receiver. They are based on a 10 dB or better signal to noise ratio with an audio output of 50 mW.

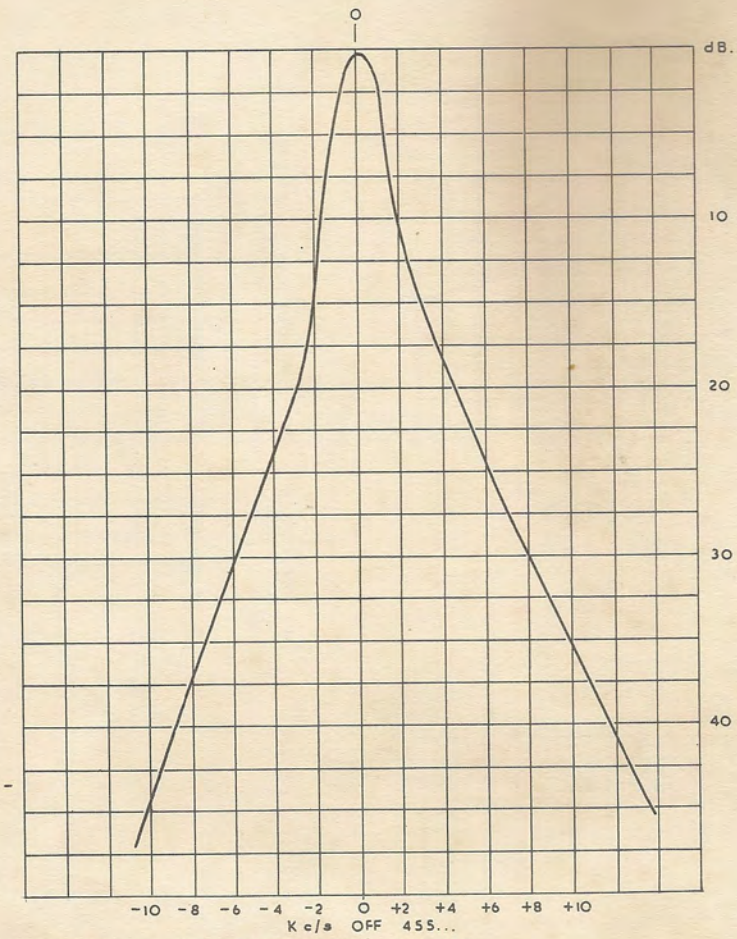

GRAPH-7 I.F. SELECTIVITY CURVE.

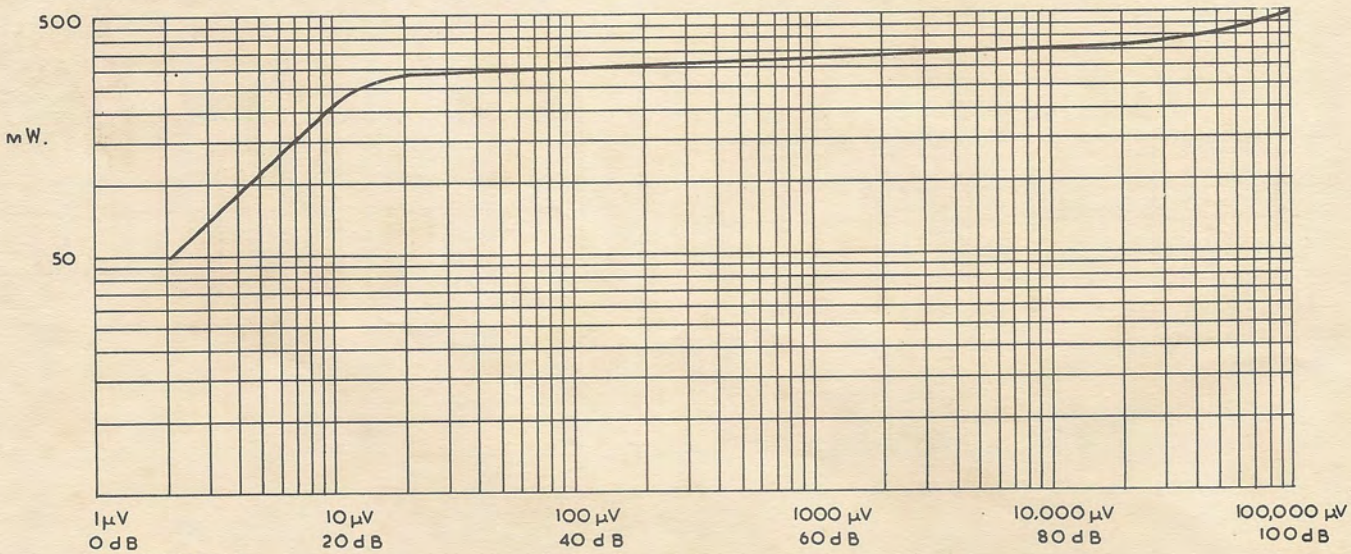

GRAPH-6

The above graph shows the A.G.C. Characteristic of the Mohican receiver, taken at 1 Mc/s with the R.F. gain control in its mid position.

SPECIFICATIONS

10 transistor superheterodyne general coverage receiver.

IF Frequency: . . . . . 455 kc.

Frequency Coverage: . . . . . .

Band	Frequency
A	550 kc - 1650 kc
B	1650 kc - 4.5 mc
C	4.5 mc - 9.0 mc
D	9.0 mc - 20.0 mc
E	20.0 mc - 30.0 mc

Selectivity: . . . . . 3 kc wide at 6 db down

Sensitivity: . . . . . Band A - 10 microvolt - 10 db or better signal to noise ratio at 50 milliwatt audio output. Band B, C, D and E - 2 microvolts = 10 db or better, signal to noise ratio at 50 milliwatt audio output.

Panel Controls: . . . . . .
RF GAIN
VOLUME w/ON and OFF switch
MAIN TUNING
BANDSPREAD TUNING
BFO w/ON and OFF switch
AVC switch
ANL switch
Dial light switch
Antenna trimmer
Band switch

Rear Chassis: . . . . . .
Aerial Inputs
Muting Terminals
External Supply.

Transistor Complement: . . . . . .

AF115	RF Amplifier
AF115	Mixer
AF115	Oscillator
OC45	1st IF Amplifier
OC45	2nd IF Amplifier
OC45	3rd IF Amplifier
OC81D	Audio Driver
OC81	Audio Output
OC81	Audio Output
OC45	BFO

Battery Life (Two 6v PP1 or equivalent): . . . . . Up to 400 hours normal intermittent service.

Image Rejection: . . . . . 30 db average.

Output: . . . . . 400 milliwatts at 10% distortion.

Power Required: . . . . . 12 volts at 35 ma - 50 milliwatt output.

Weight: . . . . . 17 lbs.
Shipping Weight: . . . . . 20 lbs.

Size: . . . . . 6-7/8" high x 12" wide x 10" deep.

INTRODUCTION

The HEATHKIT Mohican, model GC-1U, is a fully transistorized general coverage receiver, designed primarily for amateur and Short Wave Listener use. Many new circuit components and design concepts have been used, to provide the amateur or Short Wave Listener with a portable receiver having many features of the higher priced units. Provision for external muting is included. Reception of CW and SSB signals is made possible with the BFO. Also featured is a slide rule dial, RF gain control, antenna trimmer, and calibrated bandspread on the amateur bands.

The Mohican circuit layout is shown in the Block Diagram in Detail 1.

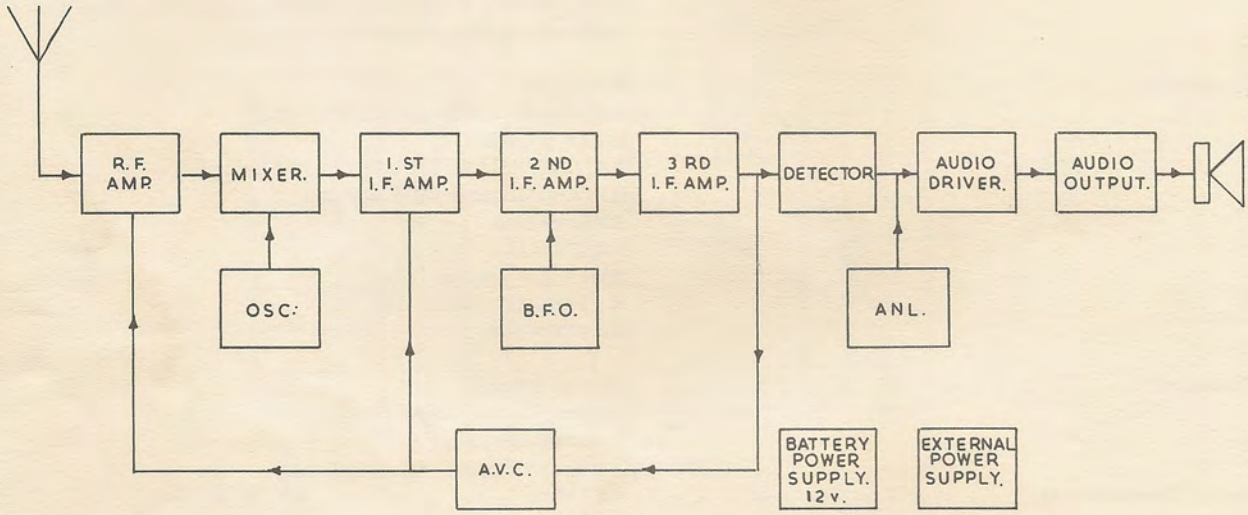

DETAIL-1.

The RF amplifier, mixer and oscillator sections use high frequency, alloy diffused, transistors. The majority of the parameters of a transistor, such as input and output impedance and transfer admittance, are influenced to a greater degree by the base resistance. It is important therefore, that this resistance should be as low as possible. This has been achieved with the alloy-diffusion technique by the use of pre-diffused material.

The advantages result from their high input and output impedances, negligible phase shift at low frequencies and an extremely low feedback capacitance. These factors facilitate a higher overall gain without neutralising and because the circuit impedances can be arranged to be low compared with the device impedances, the overall circuit spreads due to the device are low.

The IF amplifier sections (1st, 2nd and 3rd) use "transfilters" for shaping the band-pass. These transfilters use the piezoelectric effect of ceramic. No alignment is required and a fixed narrow band-pass is achieved.

The beat frequency oscillator uses the variable capacity effect of a diode for tuning; thereby eliminating the need for linkage that would be required for a variable capacitor. A potentiometer, on the front panel, varies the back bias voltage of a diode resulting in a change of the diode capacity, which tunes the BFO tank circuit.

CIRCUIT DESCRIPTION

RF Amplifier Section

Refer to Detail 2.

An AF115 transistor X1 is used as the RF amplifier. This stage is operated in a grounded base configuration to maintain a flat alpha gain (current gain between emitter and collector) over a wide frequency range. The current gain of a grounded base transistor is always less than unity, however, due to the low input and high output resistance the voltage gain is very high.

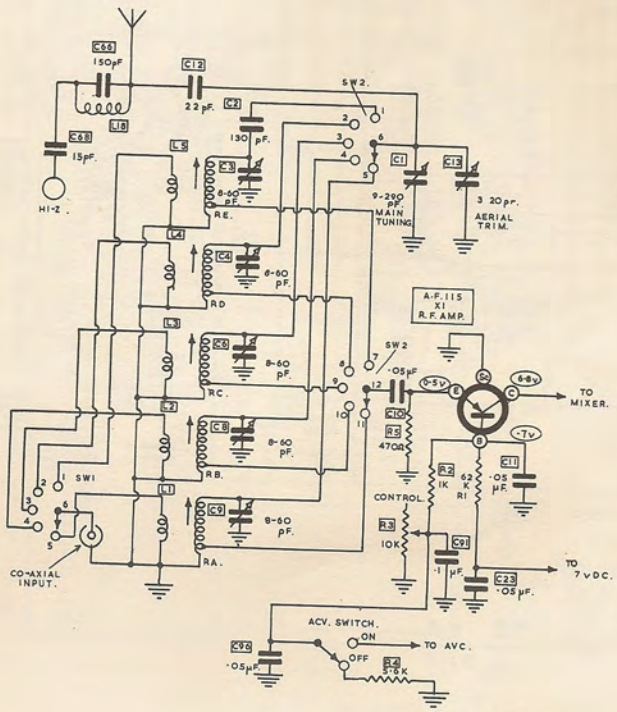

DETAIL-2.

Base bias is set by the voltage divider network consisting of resistor R1 and R2, in series with the parallel combination of resistors R3 and R4. With AVC OFF base bias is taken from the junction of R1 and R2 and can be varied with the RF gain control R3 is placed in parallel with the AVC supply through switch SW1.

Switch selected high or low impedance antenna inputs have been provided. These inputs are accessible on the chassis rear apron. The built-in whip aerial, being of high impedance, is coupled to the selected antenna coil through C12. The signal is then coupled from the low impedance tap, through C10 to the emitter of the RF amplifier. When using a low impedance aerial, the incoming signal is coupled transformer through C10 to the emitter of the RF amplifier, the impedance of which is in the order of 75Ω.

Capacitor C11 provides an RF ground and prevents loss caused by degeneration across the bias network. The case of X1 is grounded to act as an RF shield.

The band switch connects the antenna coil for the selected band in parallel with the main tuning capacitor section C1. The signal, from the collector of the RF amplifier is coupled to the mixer base through the corresponding mixer coil. The variable capacitor, C13, parallels the main tuning capacitor C1 and provides front panel tuning to compensate for antenna variations.

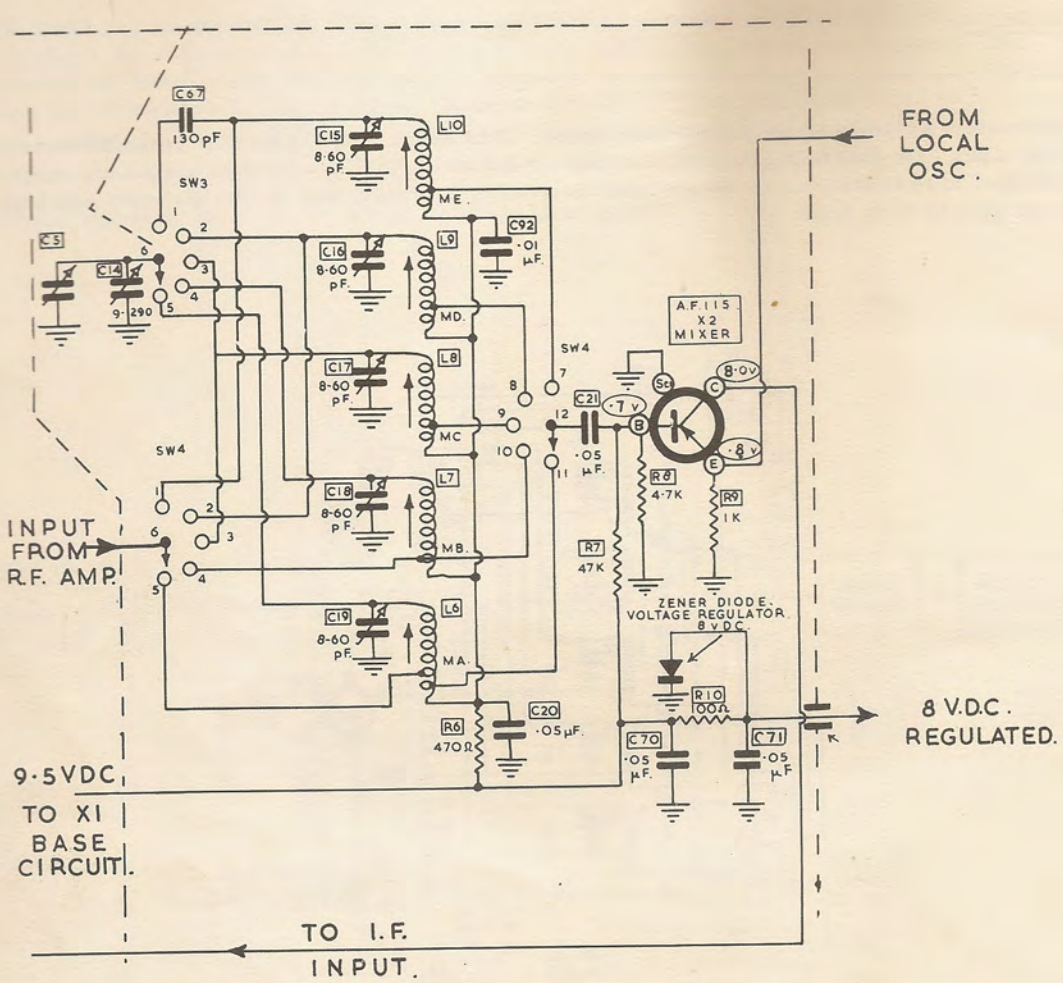

DETAIL. 3.

Mixer Section

An AF115 transistor X2 is operated in a common emitter configuration, as the mixer. A transistor operated in this configuration has a high beta gain (current gain between the base and collector). A voltage divider network consisting of R7 and R8 provide the base bias. The incoming signal from the collector of the RF amplifier is fed to the top or the tap of the mixer coil as required for proper impedance matching. The signal is then fed from the mixer coil, through C21 DC blocking capacitor, and into the base of the mixer. The mixer coil is tuned by the main tuning capacitor section C14 and bandspread capacitor C5 The local oscillator output is injected into the emitter of the mixer transistor through the coupling capacitors,(as described in the oscillator section). These correctly set the oscillator injection level for each band.

The IF output of the mixer is applied to the IF input transformer primary, (see Detail 5) from which the mixer collector voltage is derived. The IF signal is decoupled from the negative supply line by resistor R11. R9 resistor establishes the DC operating point of the emitter and also compensates for circuit and transistor variations.

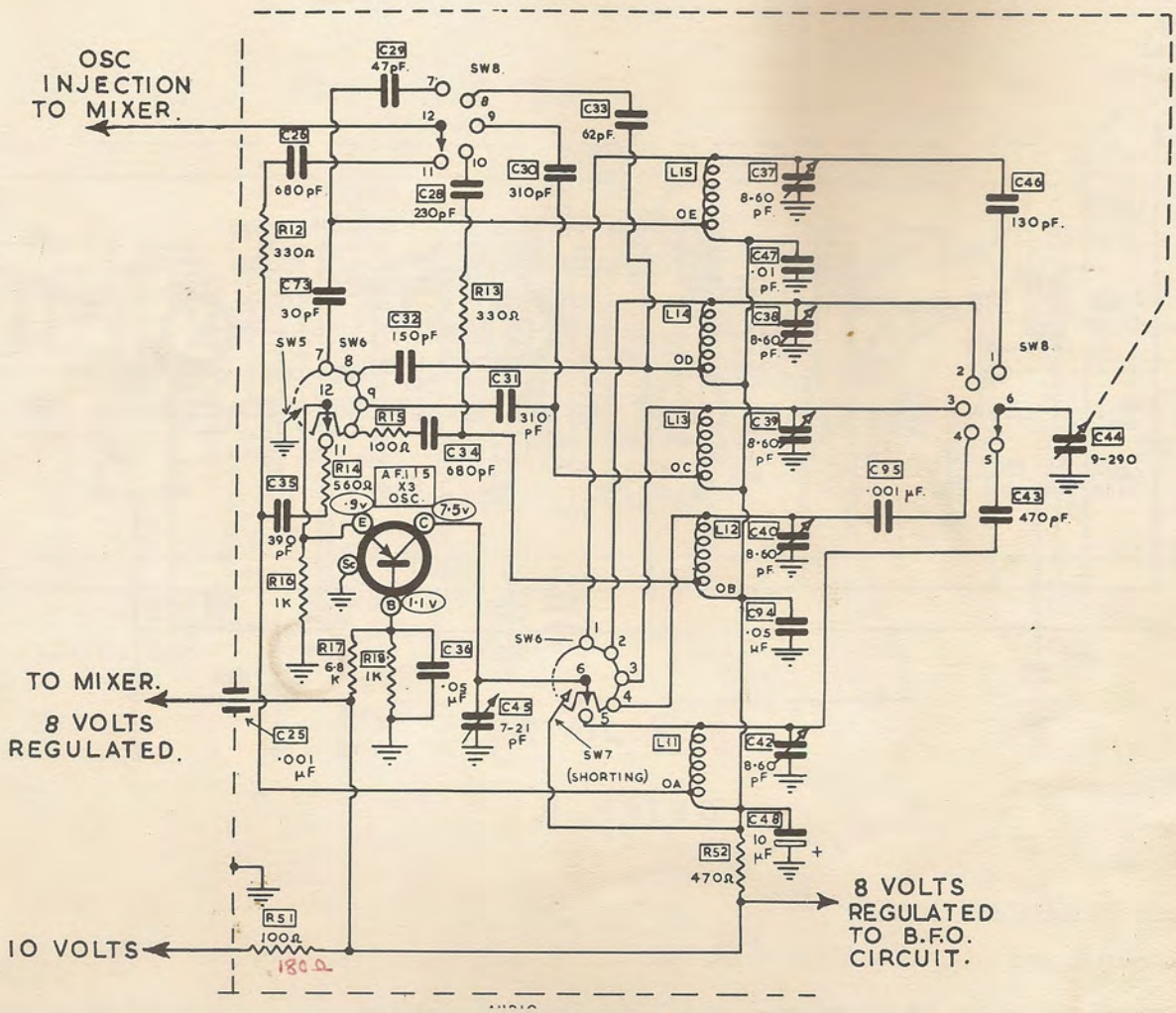

DETAIL.4

Oscillator Section

Refer to Detail 4.

An AF115 transistor, X3, operated in a common base configuration, is used as the local oscillator. Base bias is set by the voltage divider network consisting of R17 and R18. The base is effectively placed at RF ground with the bypass capacitor C36. Emitter feedback is coupled from the oscillator coil tap through the series capacitors and resistors as selected by the band switch. These capacitors keep the DC collector voltage off the emitter and in conjunction with the tap placement, establish the feedback required for proper operation of the oscillator. The main tuning capacitor, section C44, is band switch connected to the desired oscillator coil. C43 is placed in series with C44 to provide the proper tuning capacitor range for band A. C46 is placed in series with C44 to provide the proper tuning capacitor range on band E. The tuning range of C44 does not require compensation for bands B, C, and D. The collector voltage is applied through the oscillator coils, the start of which are heavily bypassed by C47 and C48 capacitors. Variable capacitor C45 is connected directly to the collector of the oscillator and provides electrical bandspread. The RC networks in the oscillator output circuit set the proper oscillation injection level to the mixer for each band.

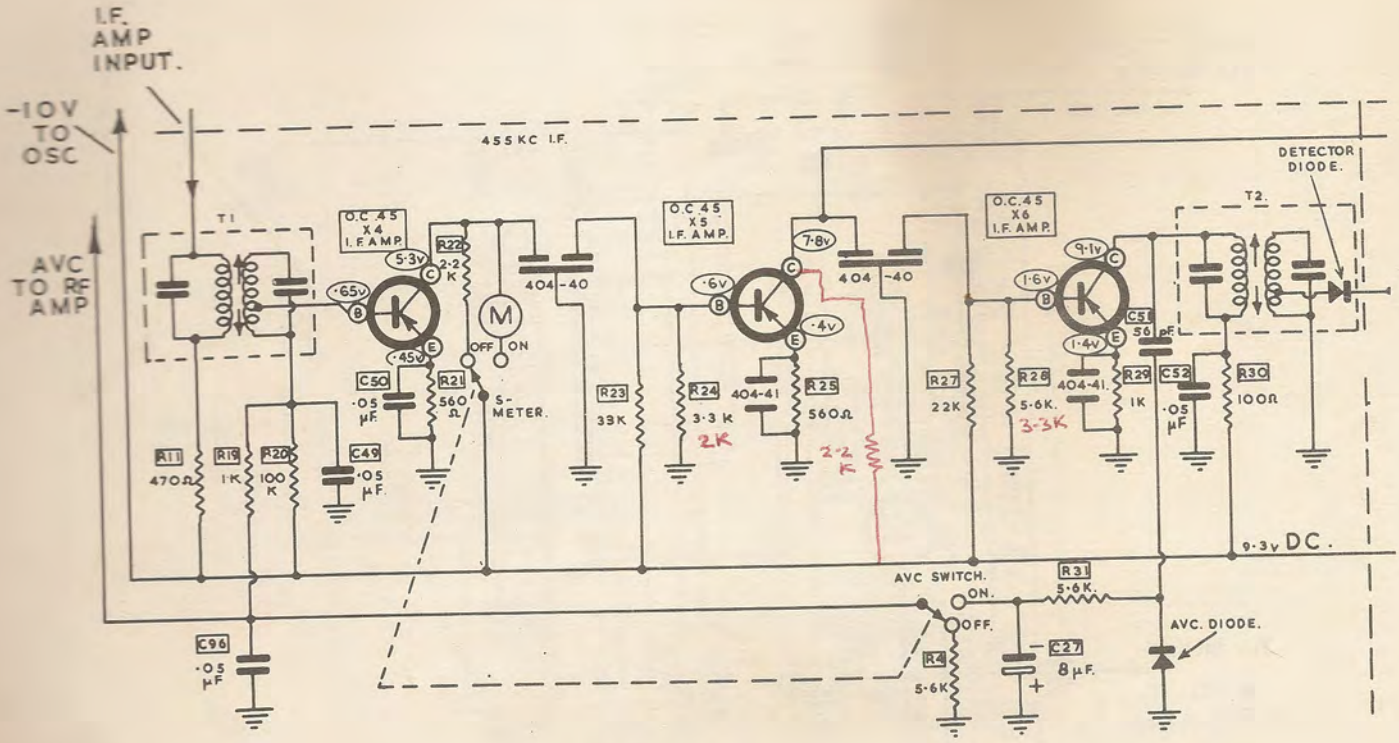

DETAIL.5.

455 Kc/s IF Amplifier and Detector

Refer to Detail 5.

Three OC45 transistors (X4, X5 and X6) operated in a common emitter configuration are used as the IF amplifiers.

The output of the mixer (455 kc) is inductively coupled to the base of the 1st IF amplifier through the input IF transformer T1. The circuitry for the three IF stages are similar in configuration. The secondary of T1 has been tapped down to match the base input impedance of X4. Base bias of X4 is set by the voltage divider network of R19 and R20 resistors. R19 is switched in series with R4 resistor to ground in AVC OFF position. With the AVC ON R19 is placed in series with the AVC isolating resistor R31. The emitter of X4 is stabilized by R21 resistor and bypassed by C50 to eliminate degeneration caused by placing the emitter above the chassis potential. The collector voltage is applied through R22 resistor or through the 1 ma meter (4.5 KΩ internal resistance) as selected by AVC switch SW1. The output of X4 is fed into the transfilter (404-40). This device uses the piezoelectric effect of a ceramic material to produce a narrow band-pass at 455 kc with a high input impedance and a low output impedance. The operation of the transfilter is not dissimilar to the more familiar crystal lattice filter. In the emitter circuits of X5 and X6 there are other transfilters (404-41). These are series tuned ceramic filter devices used in place of emitter bypass capacitors, and are series resonant at 455 kc. The use of these transfilters provide an RF ground at 455 kc and further improves the IF skirt selectivity. The collector of X5 is coupled to the base of X6 through a transfilter in the same manner as the previous stage.

The output of the 3rd IF transistor X6 is coupled to the primary of the detector transformer T2. The signal is inductively coupled to the secondary of T2 and through the tap to the detector diode. Both T1 and T2 are double slug tuned to provide sharp band-pass characteristics. The AVC voltage is coupled from the collector by C51, rectified by the diode (OA81) and the positive rectified AVC voltage is isolated by R31 resistor before being applied to the RF amplifier and the first IF amplifier. An increase in the signal level at the collector of X6 will cause an increase in the AVC voltage being applied to X1 and X4.

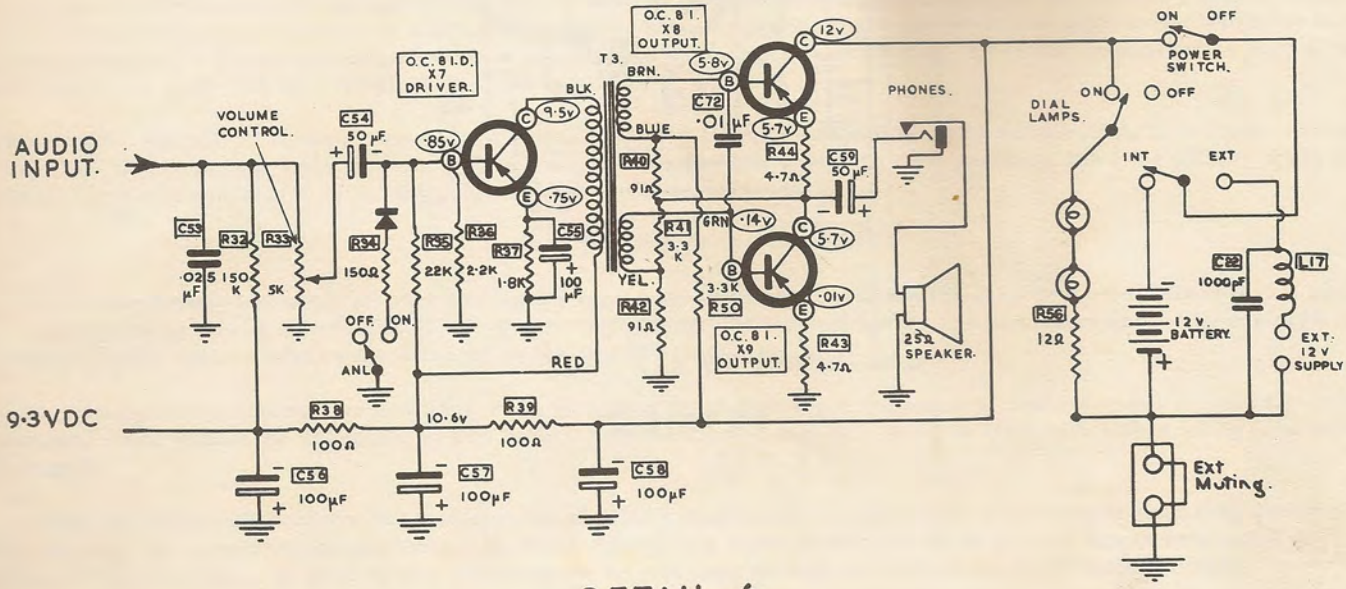

DETAIL. 6.

Audio Section

Refer to Detail 6.

The audio section consists of an OC81D driver X7 and two OC81 transistors X8 and X9 operated in a modified push-pull circuit. The signal from the detector is coupled to the base of the driver transistor through C54. The audio control R33 controls the signal level being applied to the driver transistor. The voltage divider network, consisting of resistors R35 and R36, sets the base bias. The diode (OA81), in conjunction with R34, makes up an automatic noise limiter which is switch selected by SW4. The emitter of the driver X7 is stabilized for circuit or manufacturing variations by R37. The emitter is bypassed by capacitor C55 to eliminate degeneration. This bypass capacitor is large, compared to the previous emitter bypass, to increase audio response. The driver collector voltage is applied through the primary of T3 from the filtered (-) minus supply line. The driver transformer T3 is designed with a high impedance primary to match the collector and a split low impedance secondary to match the base of the audio output transistors. Audio output transistor X8 has -12 volts applied directly to the collector from the battery; however, due to the voltage divider network, consisting of R41, R50, approximately 6 volts appear on the base leaving a 6 volt difference between the emitter and the collector.

The collector of X9 is at -6 volts and the emitter is at approximately chassis potential, leaving a 6 volt difference between the emitter and the collector. In this manner the two transistors run at equal voltage level. The audio output is coupled through C59 to the 25Ω speaker and then to ground. R43 and R44 are used to provide stabilization against transistor or circuit variations. R38, R39, C56, C57 and C58 are used as a filter network to keep audio signal voltage out of the IF amplifier stages.

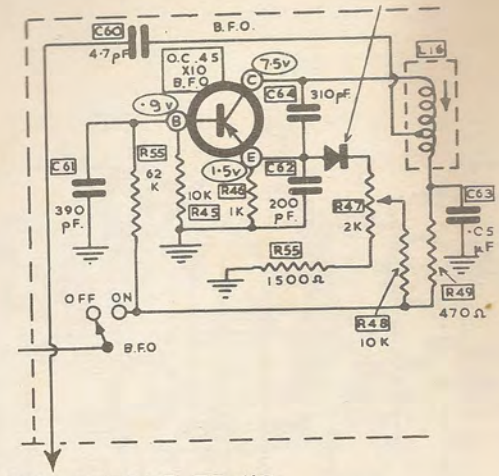

B.F.O. OUTPUT TO X5.

DETAIL .7.

BFO

Refer to Detail 7.

An OC45 transistor X10, operating in a common base oscillator circuit, is used as the BFO. The voltage divider network, consisting of R55 and R45, sets the base bias. C61 places the base at an effective RF ground. The 455 kc tank circuit is comprised of the series capacitors C64 and C62 in parallel with L16. Feedback is applied to the emitter through C64. The variable capacity phenomena of a diode with adjustable back bias is used to tune the BFO through the band-pass of the receiver. R47 is used to vary the diode back bias voltage. The collector voltage is applied through R49, a decoupling resistor, and bypassed by capacitor C63. The output of the BFO is coupled from the tap on L16, through capacitor C60 to the collector of X5. SW5 turns the BFO ON or OFF as selected.

CONSTRUCTION NOTES

This manual is supplied to assist you in every way to complete your kit with the least possible chance of error. The arrangement shown is the result of extensive experimentation and trial. If followed carefully, the result will be a stable instrument, operating at a high degree of dependability. We suggest that you retain the manual in your files for future reference, both in the use of the instrument and for its maintenance.

UNPACK THE KIT CAREFULLY AND CHECK EACH PART AGAINST THE PARTS LIST. In so doing, you will become acquainted with the parts. Refer to the charts and other information on the inside covers of the manual to help you identify the components. If some shortage or parts damage is found in checking the Parts List, please read the REPLACEMENT section and supply the information called for therein. Include all inspection slips in your letter to us. Hardware items are counted by weight, therefore, there may be a few more or less than the quantity specified. If a few are missing, please obtain them locally if at all possible.

In order to expedite delivery to you, we are occasionally forced to make minor substitution of parts. Such substitutions are carefully checked before they are approved and parts supplied will work satisfactorily. In checking the Parts List for resistors, for example, you may find that a resistor with a 5% tolerance has been substituted for a resistor with a 10% tolerance, as shown in the Parts List. These changes are self-evident and are mentioned here only to prevent confusion in checking the contents of your kit.

Resistors generally have a tolerance rating of 10% unless otherwise stated in the Parts List. Tolerances on capacitors are generally even greater. Limits of +100% and -50% are common for electrolytic capacitors.

PROPER SOLDERING TECHNIQUES

Only a small percentage of HEATHKIT equipment purchasers find it necessary to return an instrument for factory service. Of these, by far the largest portion of malfunction is due to poor or improper soldering.

If all tags or terminals are bright and clean, free from wax and other foreign substances, no difficulty will be experienced when soldering. Correctly soldered connections are essential if the performance engineered into a kit is to be fully realized. If you are a beginner with no previous experience in soldering, a few minutes practice with a few odd lengths of wire will be a worthwhile investment.

For most wiring a 30 to 60 watt iron or its equivalent in a soldering gun will be very satisfactory. A lower wattage iron than this may not heat the connection enough to allow the solder to flow smoothly over the joint. Keep the copper tip clean and bright by wiping it from time to time with a cloth.

CHASSIS WIRING AND SOLDERING

1) Unless otherwise indicated, all wire used is the type with coloured insulation, the size of the conductor is the same for all colours provided with this Kit. In preparing a length of insulated wire the insulation should be stripped for ¼" at each end, unless other wise directed in the construction step.

2) To avoid breaking internal connections when stripping insulation from the leads of transformers or similar components, care should be taken not to pull directly on the lead. Instead, hold the lead with pliers while it is being stripped.

3) Leads or wires on resistors, capacitors and similar components are generally much longer than they need to be for making the required connections. In these cases, the leads should be cut to proper length before the part is added to the chassis. In general the leads should be just long enough to reach their terminating points.

4) Wherever there is a possibility of bare wires shorting (touching) to other parts or to the chassis, the wires should be covered with insulating sleeving. Where the use of sleeving is specifically intended the phrase "use sleeving" is included in the associated construction step. In any case where there is a possibility of an unintentional short circuit, sleeving should be used. Extra sleeving is provided for this purpose.

5) Crimp or bend the lead (or leads) around the tag to form a good mechanical joint without relying on solder for physical strength. If the wire is too large to allow bending, or if the step states that the wire is not to be crimped, position the wire so that a good solder connection can still be made.

6) Position the work, if possible, so that gravity will help to keep the solder where you want it.

7) Always place a flat side of the soldering iron tip against the joint to be soldered, feeding in the flux cored solder provided when the joint has reached soldering temperature. It is usually not necessary to fill the entire hole in the tag with solder.

8) Remove the solder and then the iron from the completed junction, taking care not to move the leads until the solder has solidified.

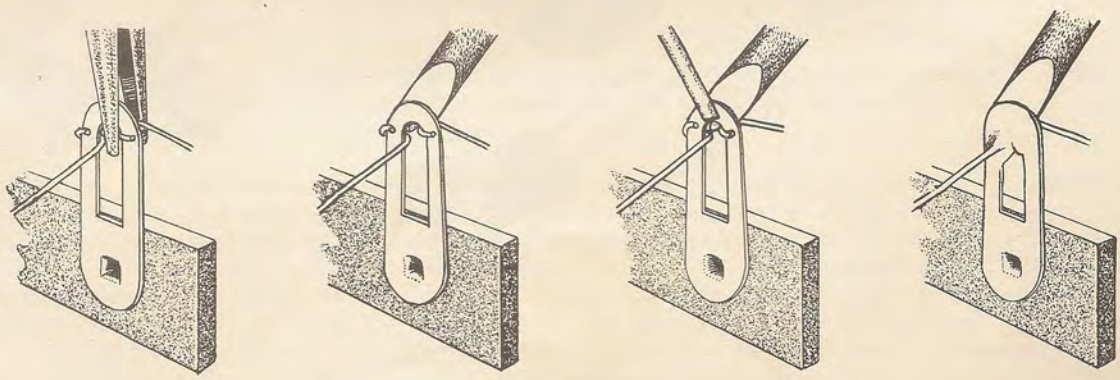

CRIMP WIRES — HEAT CONNECTION — APPLY SOLDER — ALLOW SOLDER TO FLOW

The Company reserves the right to make such circuit modification and/or component substitutions as may be found desirable, indication being by "Advice of Change" included in the kit.

NOTE: Daystrom Ltd. will not accept any responsibility or liability for any damage or personal injury sustained during the building, testing, or operation of this instrument.

> ALL GUARANTEES ARE VOIDED AND WE WILL NOT REPAIR OR SERVICE INSTRUMENTS IN WHICH ACID CORE SOLDER OR PASTE FLUXES HAVE BEEN USED. WHEN IN DOUBT ABOUT SOLDER, IT IS RECOMMENDED THAT ONLY "60/40" RESIN CORE RADIO SOLDER BE PURCHASED.

PROPER SOLDERING PROCEDURE

Only a small percentage of Heathkit purchasers find it necessary to return an instrument for factory service. Of these, by far the largest proportion function improperly due to poor or improper soldering.

Correct soldering technique is extremely important. Good soldered joints are essential if the performance engineered into the kit is to be fully realised. If you are a beginner with no experience in soldering, half an hour's practice with odd lengths of wire and a valveholder, etc., will be invaluable.

Highest quality resin-cored solder is essential for efficiently securing this kit's wiring and components. The resin core acts as a flux or cleaning agent during the soldering operation.

NO SEPARATE FLUX OR PASTE OF ANY KIND SHOULD BE USED. We specifically caution against the use of so-called "non-corrosive" pastes or liquids. Such compounds, although not corrosive at room temperature, will form residues when heated. These residues are deposited on surrounding surfaces and attract moisture. The resulting compounds are not only corrosive but actually destroy the insulation value of non-conductors. Dust and dirt will tend to accumulate on these "bridges" and eventually will cause erratic or degraded performance of the instrument.

IMPORTANT

IN THE "STEP-BY-STEP" PROCEDURE the abbreviation "NS" indicates that the connection should not yet be soldered, for other wires will be added. At a later stage the letter "S" indicates that the connection must now be soldered. Note that a number appears after each solder (S) instruction. This number indicates the number of leads connected to the terminal in question. For example, if the instructions read, "Connect one lead of a 47 KΩ resistor to tag 1 (S-2)", it will be understood that there should be two leads connected to the terminal at the time it is soldered. This additional check will help to avoid errors.

SPECIAL NOTE: Where a wire is passed through a tag to other parts of the circuit, this will be regarded as two connections (S-2).

When two or more connections are made to the same solder tag a common mistake is to neglect to solder the connections on the bottom. Make sure all the wires are soldered.

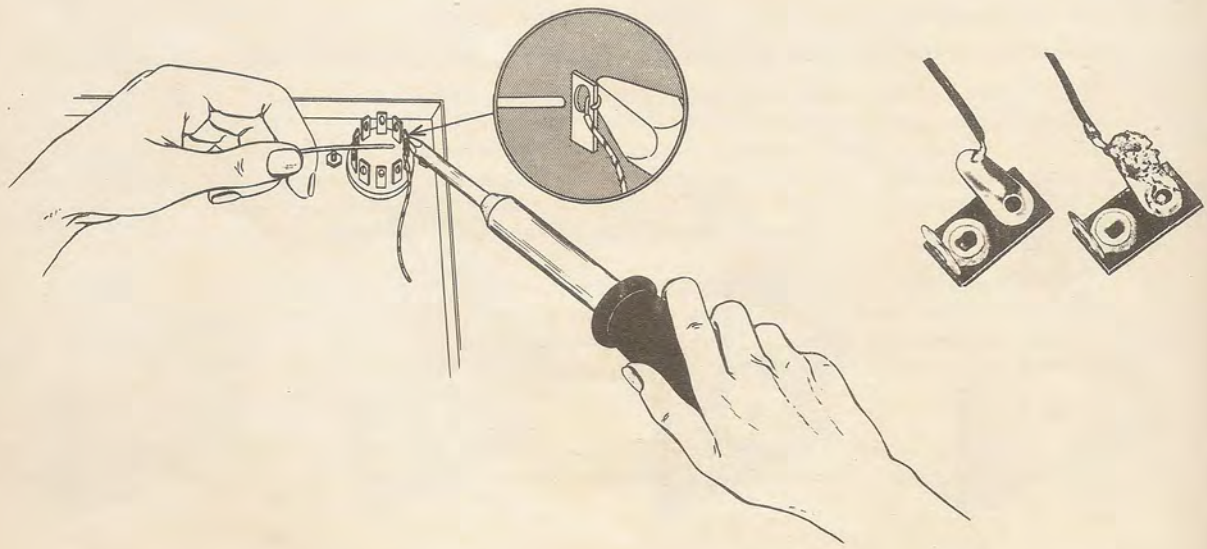

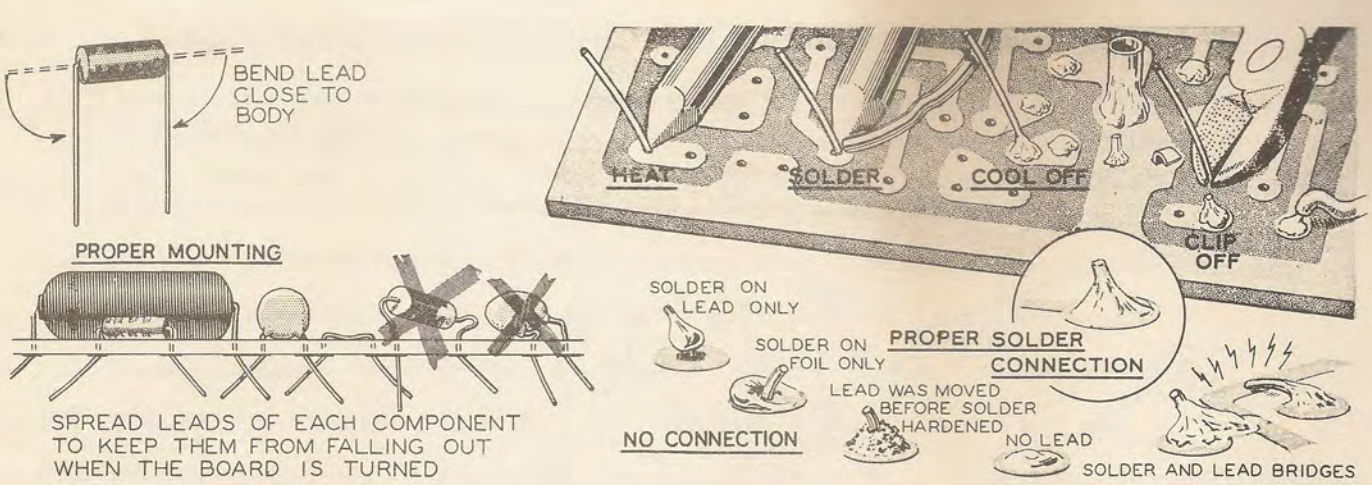

CIRCUIT BOARD WIRING AND SOLDERING

Before attempting any work on the circuit board, read the following instructions carefully and study the figures shown. It is only necessary to observe a few basic precautions which will ensure proper operation of the unit the first time it is turned on.

Proper mounting of components on the board is essential for good performance. A good general rule to follow is that all components on the board should be mounted tightly to the board, unless instructions state otherwise. All leads should be kept as short as possible to minimize the effects of stray capacity in the wiring. Proper and improper methods of mounting are illustrated in the accompanying Figures.

Tubular capacitors and resistors will fit properly if the leads are bent, as shown. Disc capacitors will generally fit in place with no lead preparation other than determining that the leads are straight. Components with tags normally require no preparation unless the tags appear to be bent, in which case they can be straightened with a pair of pliers. Parts should be inserted as instructed, and the leads bent outward slightly, as illustrated, to lock them in place.

Components will be soldered in groups: after a group of components have been installed, instructions will be given to solder them. When the components have been soldered, diagonal cutters may be used to cut off the excess leads close to the board.

The actual technique of soldering leads to a circuit board is quite simple. Position the tip of the soldering iron so that it firmly contacts both the circuit board foil and the wire or tag to be soldered, as shown. Then the solder should immediately be placed between the iron and the joint to be soldered. Remove the solder as soon as it begins to melt and flow on to the lead and foil. Hold the tip of the iron in place only until the solder begins to flow outward over the foil. Then remove the iron quickly.

Avoid overheating the connection. A soldering pencil or small iron (approximately 30 watts) is ideal for use in circuit board work. If a higher wattage iron or soldering gun must be used, precautions must be taken to avoid circuit board damage due to overheating.

The use of excessive amounts of solder will increase the possibility of bridging between foil conductors or plugging holes which are to be left open for wires which may be added later on. If solder is accidentally bridged across insulating areas between conductors, it can be cleaned off by heating the connection carefully and quickly wiping the solder away with a soft cloth. Holes which become plugged can be cleared by heating the area immediately over the hole while gently pushing the lead of a resistor through the hole from the opposite side, and withdrawing the lead before the solder rehardens. Do not force the wire through: too much pressure before the solder has time to soften may separate the foil from the board. In cases where foil does become damaged, repairs can usually be made with little difficulty. A break in the foil can be rejoined with a small piece of bare wire soldered across the gap, or between the foil and the lead of a component.

I.F. AND A.F. AMPLIFIER CIRCUIT BOARD WIRING.

NOTE: Wiring of the circuit board will now commence.
Read carefully the information on circuit board wiring presented on page 15.

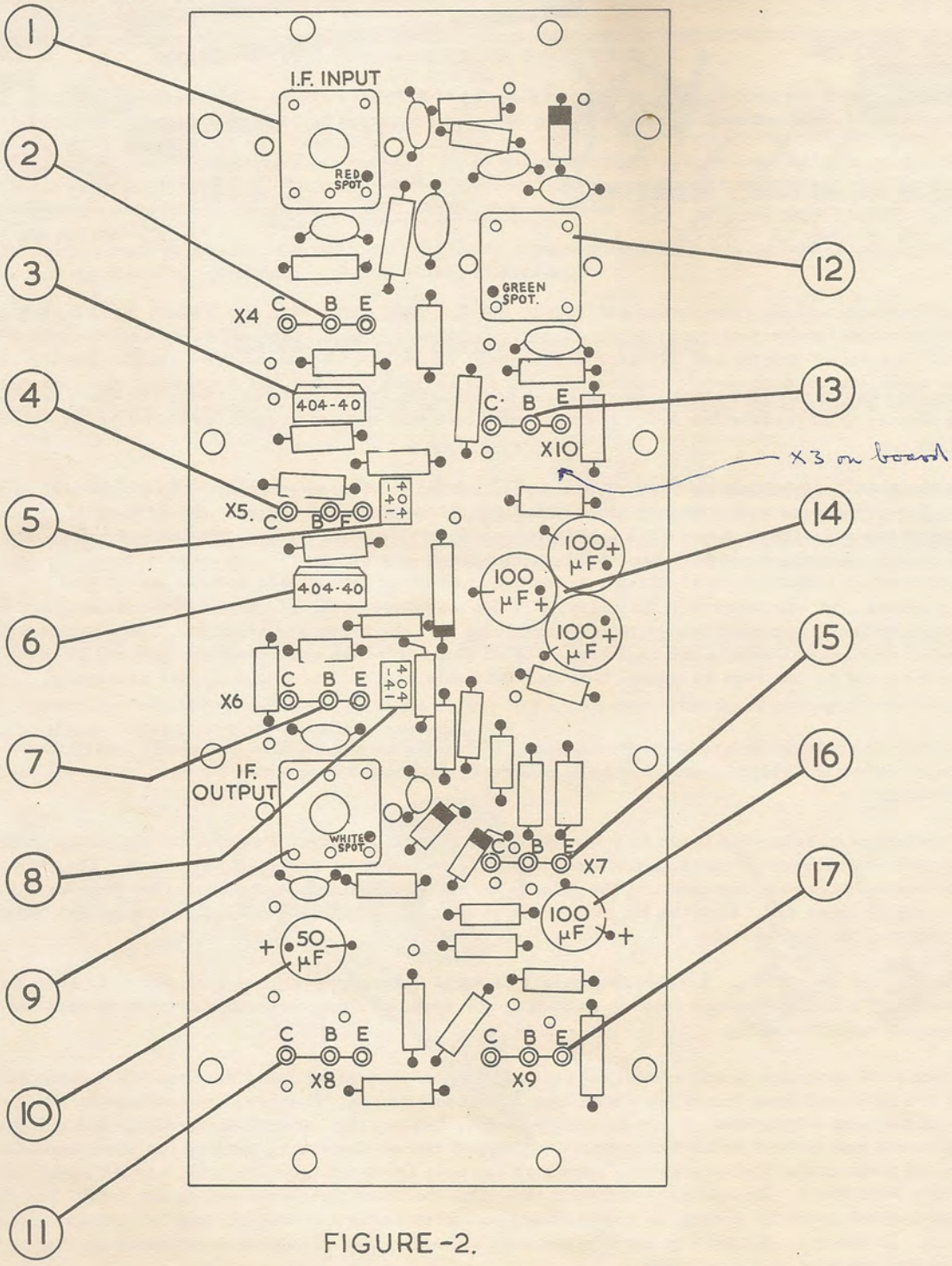

FIGURE-2.

CIRCUIT BOARD WIRING (STAGE 1)

Refer to Figure 2 and Detail 8.

(✓) Install transistor spills in holes e, b, c, at locations 2, 4, 7, 11, 13, 15 and 17. Insert each spill as shown in the detail and solder.

1. (✓) Install the red spot IF input transformer T1 (Part No. 52-505). Colour dot on the base of the transformer must align with colour dot on circuit board. Solder all pins and earth tags.

3. (✓) Install a band-pass transfilter (Part No. 404-40), as shown in Detail. Solder all three pins.

5. (✓) Install a bypass transfilter (Part No. 404-41), as shown in Detail. Solder both pins.

6. (✓) Install a band-pass transfilter (Part No. 404-40), as shown in Detail. Solder all three pins.

8. (✓) Install a bypass transfilter (Part No. 404-41), as shown in Detail. Solder both pins.

9. (✓) Install the White spot IF output and detector transformer T2 (Part No. 52-506). The colour dot on the base of the transformer must align with the colour dot on circuit board. Solder all pins and earth tags.

10. (✓) Install a 50µfd electrolytic capacitor as shown. Carefully observe polarity; see enlarged capacitor Detail. Solder both connections.

12. (✓) Install the Green spot BFO coil (Part No. 40-544). The colour dot on the base of the transformer must align with the colour printed on the circuit board. Solder all pins and earth tags.

14. (✓) Install the three 100 µfd electrolytic capacitors. The centre tags are connected in the holes nearest the edge marked +. Solder all tags.

16. (✓) Install the 100 µfd electrolytic capacitor as shown. Carefully observe polarity - see enlarged capacitor Detail. Solder both connections.

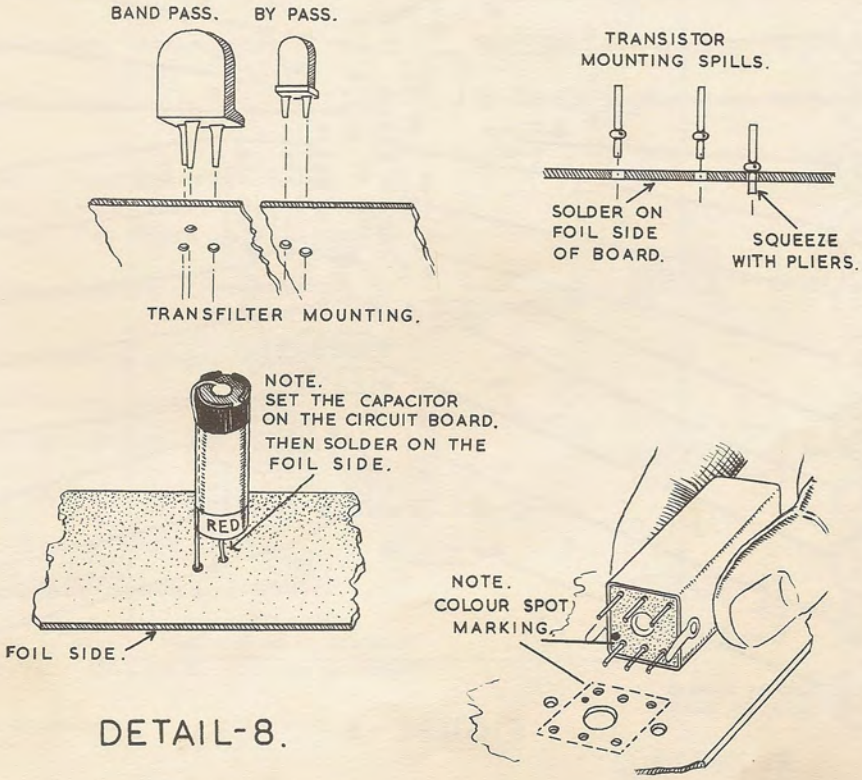

DETAIL-8.

NOTE: Mount each of the following components. Bend leads slightly after installing so that they will not fall out before soldering. Note the Red Spot on the crystal diodes and mount them as shown.

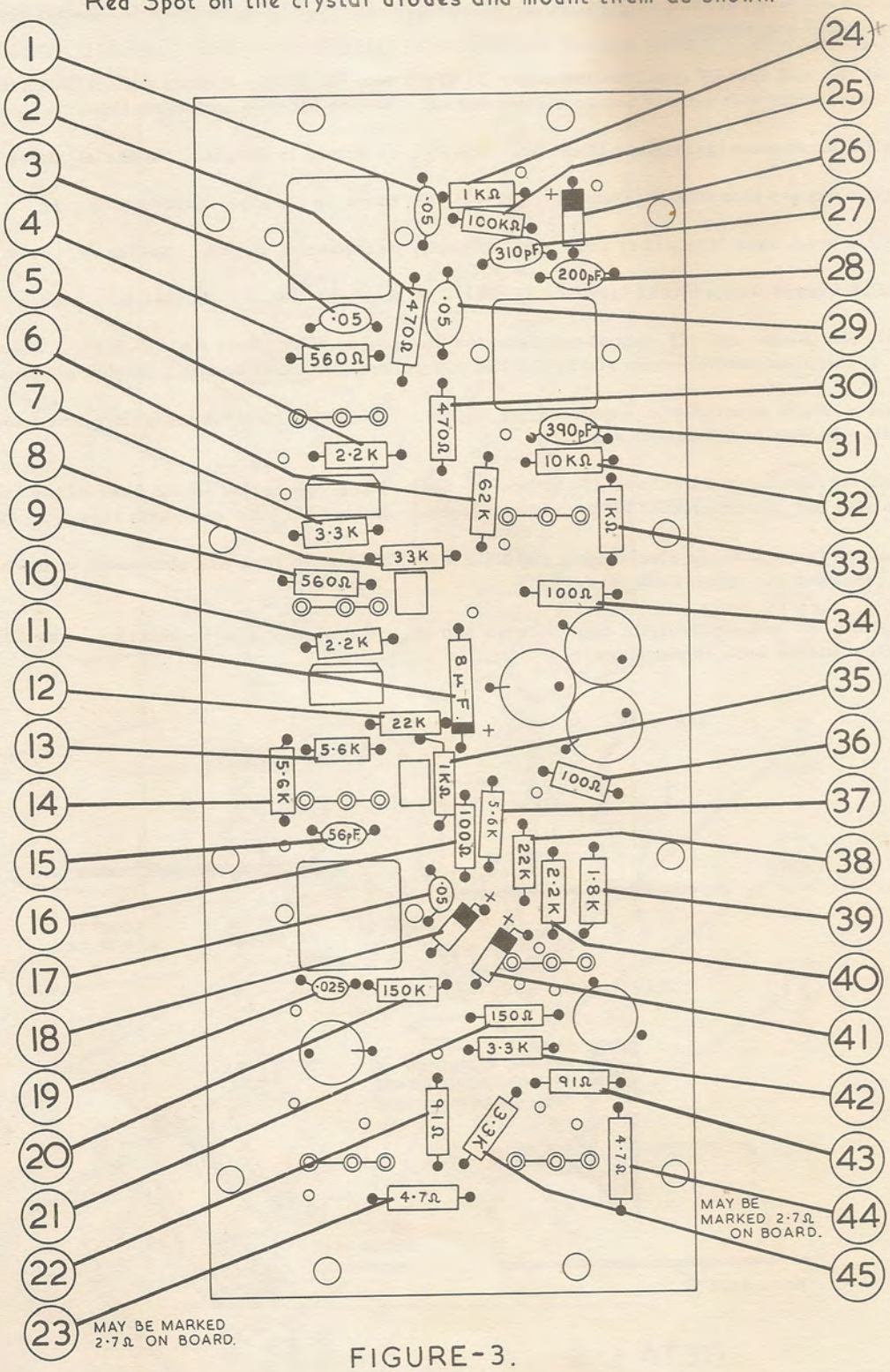

FIGURE-3.

CIRCUIT BOARD WIRING (STAGE 2) - Fig. 3.

1. (✓) .05 µfd ceramic capacitor (green, black, orange) refer to Detail 9.
2. (✓) 470Ω resistor (yellow, violet, brown)
3. (✓) .05 µfd ceramic capacitor (green, black, orange).
4. (✓) 560Ω resistor (green, blue, brown).
5. (✓) 2.2KΩ resistor (red, red, red).
6. (✓) 62KΩ resistor (blue, red, orange).
7. (✓) 3.3KΩ resistor (orange, orange, red).
8. (✓) 33KΩ resistor (orange, orange, orange).
9. (✓) 560Ω resistor (green, blue, brown).
10. (✓) 2.2KΩ resistor (red, red, red).
11. (✓) 8 µfd. 12 v electrolytic capacitor C27. Observe polarity. Red end must be conn. to cct board conn marked +
12. (✓) 22KΩ resistor (red, red, orange).
13. (✓) 5.6KΩ resistor (green, blue, red).
14. (✓) 5.6KΩ resistor (green, blue, red).
15. (✓) 56 pF mica capacitor.
16. (✓) 100Ω resistor (brown, black, brown).
17. (✓) .05 µfd ceramic capacitor (green, black, orange).
18. (✓) Crystal diode. Connect Red end to x on circuit board. CAUTION. Do not overheat when soldering. Use pliers as heat shunt.
19. (✓) .025 µfd ceramic capacitor (red, green, orange).
20. (✓) 150KΩ resistor (brown, green, yellow).
21. (✓) 150Ω resistor (brown, green, brown).
22. (✓) 91Ω resistor 5% (white, brown, black).
23. (✓) 4.7Ω resistor 5% (value marked). May be 2.7Ω on cct board
24. (✓) 1KΩ resistor (brown, black, red).
25. (✓) 100 KΩ resistor (brown, black, yellow).
26. (✓) Crystal diode. Connect Red end to +, marked on circuit board. CAUTION. Do not overheat
27. (✓) 310 pF mica capacitor.
28. (✓) 200 pF mica capacitor.
29. (✓) .05 µfd ceramic capacitor (green, black, orange).
30. (✓) 470Ω resistor (yellow, violet, brown).
31. (✓) 390 pF mica capacitor.
32. (✓) 10KΩ resistor (brown, black, orange).
33. (✓) 1KΩ resistor (brown, black, red).
34. (✓) 100Ω resistor (brown, black, brown)
35. (✓) 1KΩ resistor (brown, black, red).
36. (✓) 100Ω resistor (brown, black, brown).
37. (✓) 5.6KΩ resistor (green, blue, red).
38. (✓) 22KΩ resistor (red, red, orange).
39. (✓) 1.8KΩ resistor (brown, grey, red)
40. (✓) 2.2KΩ resistor (red, red, red). wrongly marked on 10K on PCB ~~X should be 10K~~
41. (✓) Crystal diode, connect red end to + marked on circuit board. CAUTION. Do not overheat.
42. (✓) 3.3KΩ resistor (orange, orange, red). X 2.2K
43. (✓) 91Ω resistor 5% (white, brown, black).
44. (✓) 4.7Ω resistor 5% (value marked). May be 2.7Ω on cct board
45. * ( ) 3.3KΩ resistor (orange, orange, red). X 2.2K

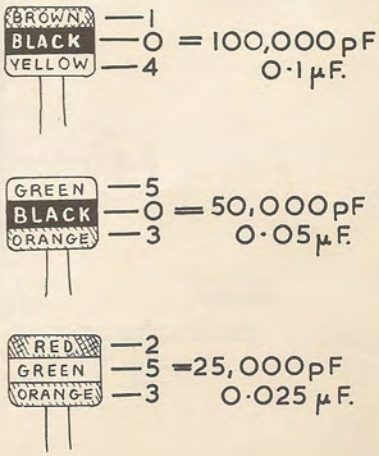

DETAIL-9.

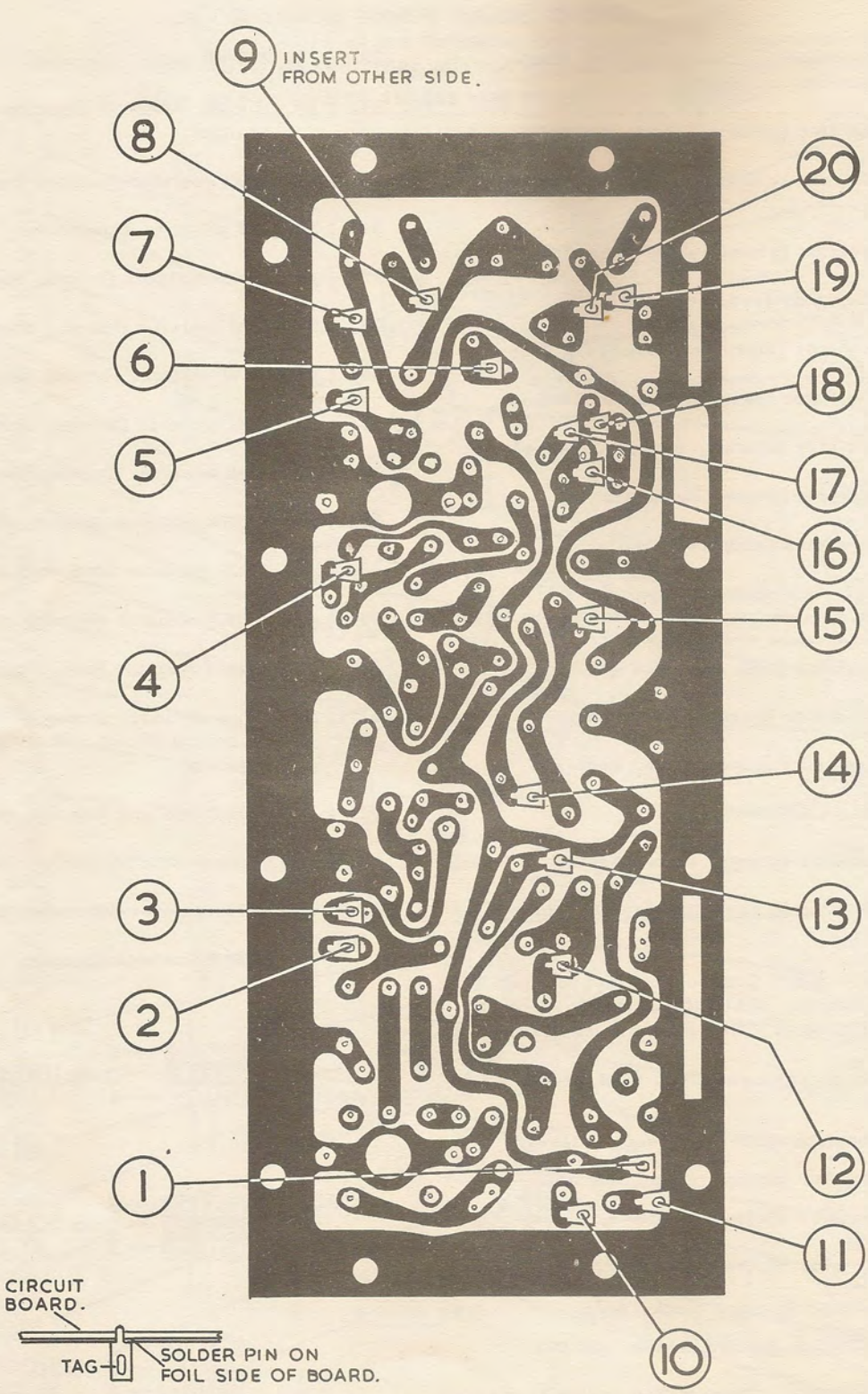
9
INSERT
FROM OTHER SIDE.
8
7
6
5
4
3
2
1
20
19
18
17
16
15
14
13
12
11
10
CIRCUIT
BOARD.
TAG
SOLDER PIN ON
FOIL SIDE OF BOARD.

FIGURE-4.

CIRCUIT BOARD WIRING (STAGE 3)

Refer to Figure 4 for the following steps and insert the printed circuit solder tags on the copper foil side of the circuit board except for step 9 which is inserted from the other side.

METHOD OF INSERTION

Grip a tag with a pair of pliers and with the small tapered end protruding, press into the correct hole in the circuit board. The shoulder of the tag should touch the copper foil. If necessary clear the hole of solder which may be there from joints previously soldered nearby.

1. (✓) Install a tag near 100KΩ resistor (S-1).
2. (✓) Install a tag at AVC-2 (S-1).
3. (✓) Install a tag at S-METER (S-1).
4. (✓) Install a tag at AVC-3 (S-1).
5. (✓) Install a tag at IF Output (S-1).
6. (✓) Install a tag at T6 (S-1).
7. (✓) Install a tag at Speaker (S-1).
8. (✓) Install a tag at T1 (S-1).
9. (✓) Install a tag on the other side at -12 VOLT (S-1).
10. (✓) Install a tag at AVC-1 (S-1).
11. (✓) Install a tag at BFO-1 (S-1).
12. (✓) Install a tag at BFO-3 (S-1).
13. (✓) Install a tag at BFO-2 (S-1).
14. (✓) Install a tag at AVC-4 (S-1).
15. (✓) Install a tag at T5 (S-1).
16. (✓) Install a tag at AF INPUT (S-1).
17. (✓) Install a tag at T-4 (S-1).
18. (✓) Install a tag at ANL (S-1).
19. (✓) Install a tag at T3 (S-1).
20. (✓) Install a tag at T2 (S-1).

INSTALLING TRANSISTORS

Refer to Figure 2 for the following steps.

(✓) Install as shown the OC45 (or equivalent) transistors at locations X4, X5, X6 and X10. Transistor loc. X10 is wrongly marked X3 on cct board.

(✓) Install the ~~OC78D~~ OC81D transistor (Purple spot on top) at location X7.

(✓) Install the matched pair of ~~OC78~~ OC81 transistors at locations X8 and X9.

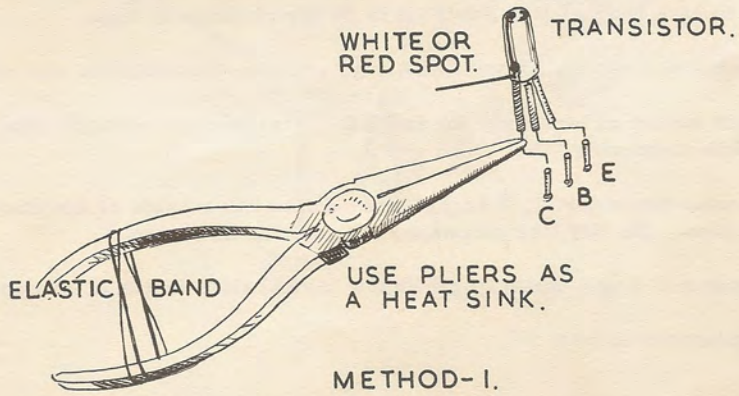

METHOD-I.

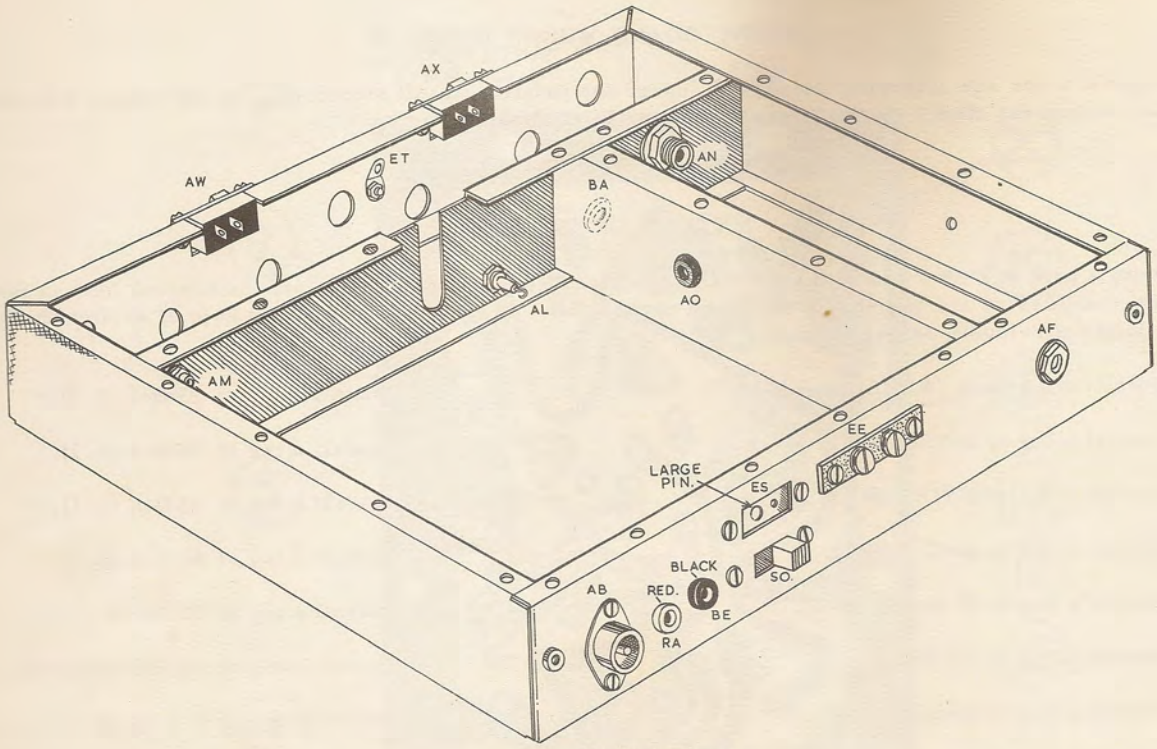

FIGURE-5.

PARTS INSTALLATION AND WIRING OF CHASSIS BASE

Refer to Figure 5 during the following steps.

(✓) Locate the chassis base (Part No. 100-524) and mount the 2-screw terminal strip at location EE. The terminal strip is mounted on the outside, as shown, with 6 BA x $\frac{1}{4}$" Binderhead Screws, lockwashers and nuts.

(✓) In the same manner mount the 2-pin socket on the inside at location ES. Ensure that the small pin is nearest the chassis centre. Use 6BA x $\frac{1}{4}$" screws and nuts. Mount a 6BA solder tag under each nut.

(✓) Mount a double-pole changeover slide switch (6 tag) at location SO with 6BA x $\frac{1}{4}$" screws and nuts. (Do not use lockwashers.)

(✓) Mount the phone jack at location AF. First remove the screw bush and insert in hole AF, replace the washers over bush and tighten to jack body. Refer to Figure 10 for position of tags.

(✓) Mount the co-axial socket at location AB with 6BA x $\frac{1}{4}$" screws, lockwashers and nuts.

(✓) Mount a Red and Black socket at locations RA and BE. Use the nuts already fitted and ensure the socket is located in the slot before tightening.

(✓) Mount a single-pole-single-throw (SPST, 2 tag) slide switch on the outside of the chassis at location AW. Use 6BA x $\frac{1}{4}$" screws and nuts. Do Not Use lockwashers, position as shown.

(✓) In a similar manner mount a single-pole-single-throw (SPST) slide switch at location AX, position as shown.

(✓) Mount a 3/8" rubber grommet at hole AO.

(✓) Carefully install a .001μfd (1,000pF) feed-through capacitor at location AL. Insert through the chassis sub-frame from the front and secure with the ¼" nut, already fitted.

(✓) Install a ¼" brass bush at locations AM and AN. Secure with 3/8" lockwashers and nuts, but do not tighten at this time.

(✓) Mount a 3/8" rubber grommet at hole BA.

(✓) Install a 4BA solder tag at location ET using a 4BA x ¼" screw with nut.

MOUNTING OF CIRCUIT BOARD TO CHASSIS

Refer to Figure 6 during the following steps.

(✓) Locate the previously assembled printed circuit board and place it on the main frame as shown. Fit a 6BA x ¼" screw with lockwasher in all mounting holes excepting those that are marked "omit", tighten securely.

(✓) Mount the heat sink bracket as shown with 6BA x 5/16" screws, lockwashers and nuts.

(✓) Refer to figure fit the heatsink clips over X8 and X9 as shown and secure each clip to the heatsink bracket with 6BA x ¼" screws, lockwashers and nuts.

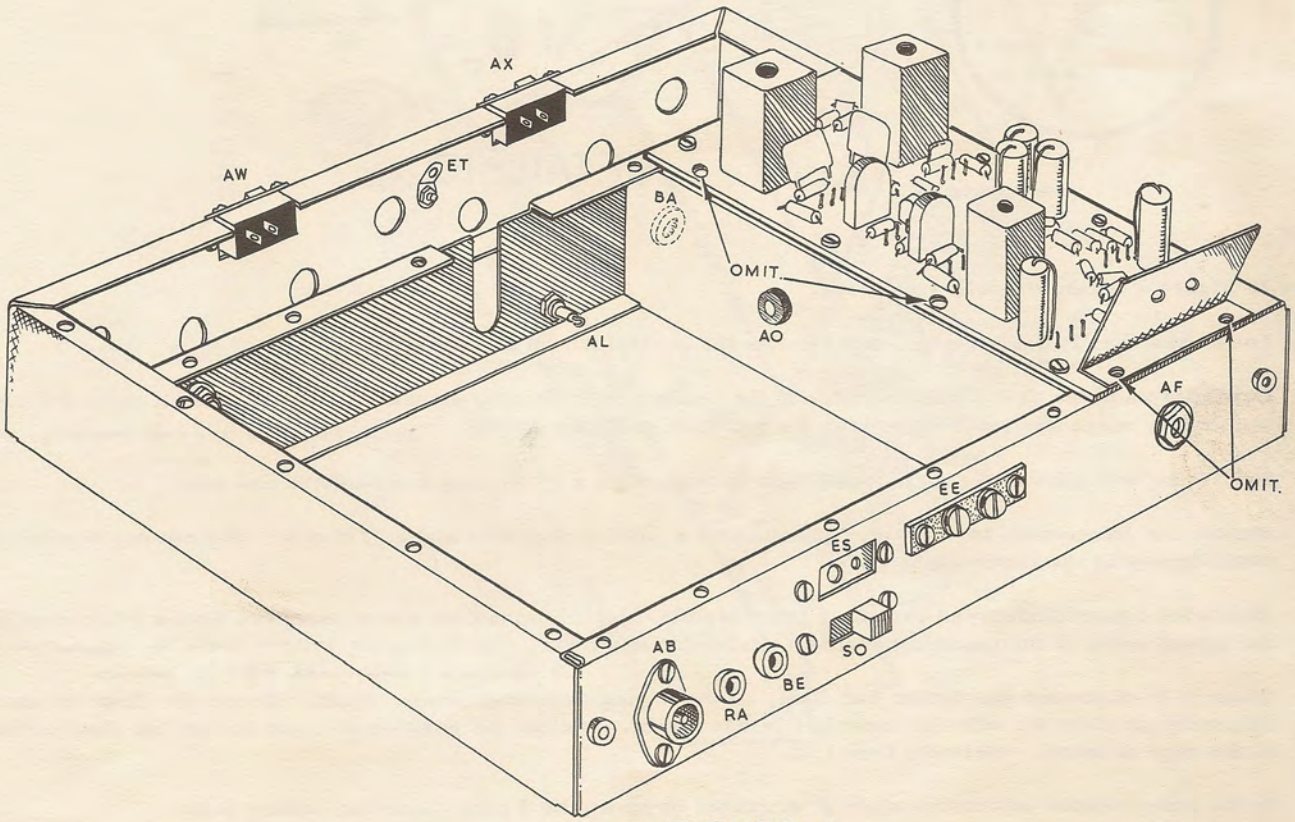

FIGURE-6.

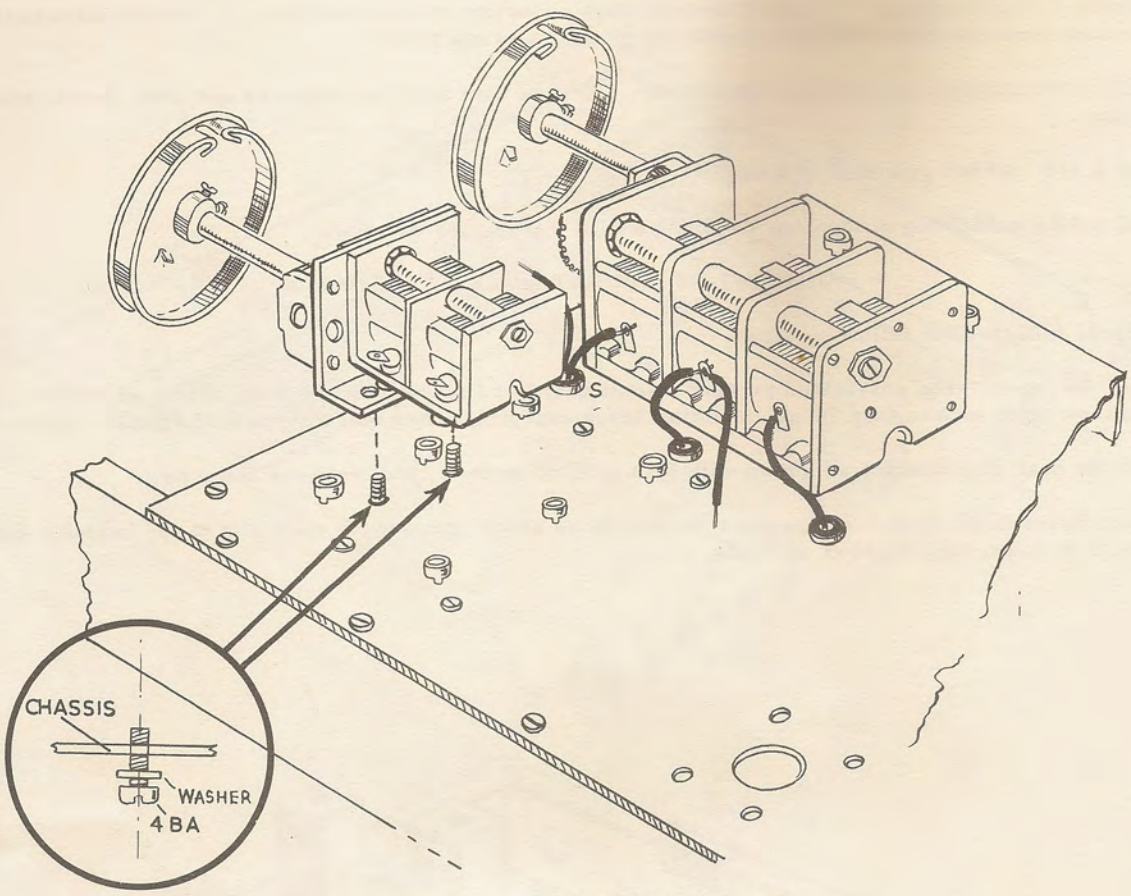

DETAIL-10.

Refer to Figure 7 during the following steps.

(✓) Locate the Coil Pack assembly, and slacken the control nut on the Bandswitch.

(✓) Carefully place the Coil Pack assembly in the chassis main frame, as shown. Check that all coils are clear and that no wires are pinched between the top plate and main frame. Don't tighten T. Cord screws

(✓) Secure the coil pack to the main frame with thirteen 6BA x $\frac{1}{4}$" screws lockwashers and nuts.

(✓) Secure the bandswitch to the main frame with a 3/8" lockwasher and a 3/8" nut. Tighten nut carefully to avoid damaging the bandswitch.

(✓) Locate the 2 gang bandspread capacitor (Part No. 26-515) and mount as shown using two 4BA x $\frac{1}{4}$" screws into the tapped holes of the capacitor frame. Refer to Detail 10. Mount 2 gang to coil-pack top chassis on two $\frac{3}{8}$ spacers + secure with 4BA $\frac{5}{8}$" screws

(✓) Place a 2" diameter dial drum, hub first, on the 2 gang capacitor tuning shaft. Orient the drum as shown, (dial cord gap at the top with the capacitor full in mesh). Adjust the position of drum so that the shaft is flush to the edge of drum. Refer to Detail 10.

(✓) In the same manner mount the other 2" diameter drum on the 3 gang capacitor tuning shaft.

(✓) Mount a 3/8" grommet in hole CA.

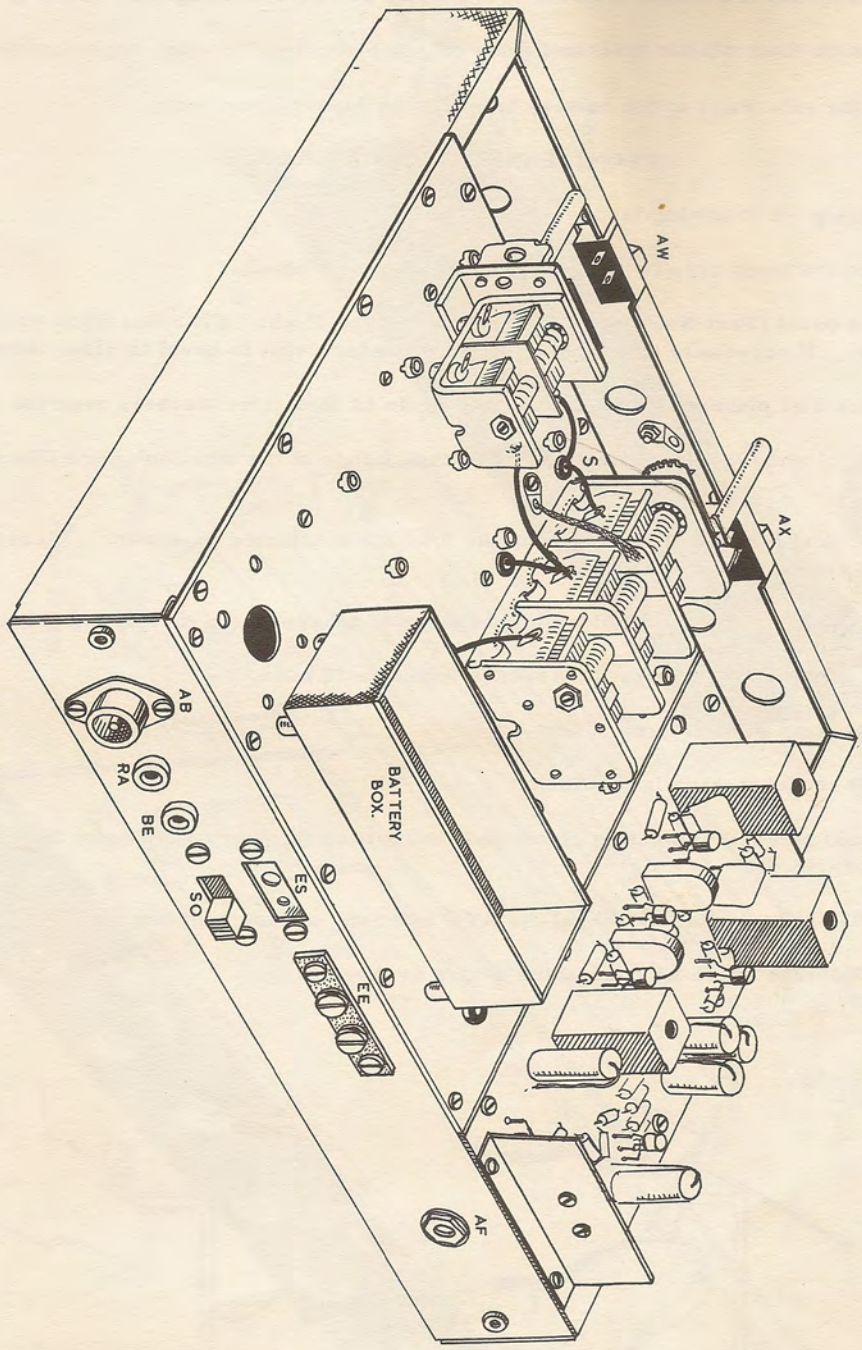

FIGURE-7.

(✓) Connect the sleeved wire from the middle section of the 3 gang capacitor to the rear section solder tag of the 2 gang capacitor (S-1).

(✓) Connect the Green wire from grommet S to the front section of the two gang capacitor (S-1).

(✓) Locate the battery box and mount it on the four pillars and secure using four 4BA x $\frac{1}{4}$" screws.

(✓) Locate the 2" wide foam plastic strip and strip off the protective backing, exposing the adhesive surface.

(✓) Carefully line the side walls of the battery box with the foam plastic strip.

FRONT PANEL AND DIAL ASSEMBLY

Refer to Figure 8 during the following steps.

(✓) Place a cloth on the work area to avoid scratching the front panel.

(✓) Place the front panel (Part No. 100-523) face down on the cloth. Fit a flat fibre washer on each of dial plate mounting studs. If necessary trim one side of the washers next to bevel to allow them to seat flat.

(✓) Place the plastic dial plate on the four studs and again fit four fibre washers over the studs.

(✓) Refer to Detail 11 and place a dial pointer over each flange of the dial back plate (Part No. 100-525) form as shown.

(✓) Now mount the dial back plate assembly on the four studs oriented as shown. Secure with ~~6-32~~ 4BA lockwashers and nuts on the two bottom studs only.

(✓) Mount a lamp bracket with a 4BA solder tag on the stud nearest the S meter, secure with a ~~6-32~~ 4BA nut.

(✓) On opposite stud mount a lamp bracket, secure with a ~~6-32~~ 4BA nut.

(✓) Screw in a pilot lamp in each lamp socket.

(✓) Slide on a lamp socket in each lamp bracket.

(✓) Locate the signal strength indicating meter and mount it on the front panel from the front. Secure using the spring clamp provided.

(✓) Install the DPDT (6 tag) slide switch at the AVC location, secure with two nuts. DO NOT use lockwashers.

It makes no difference which way round the switch is mounted.

DETAIL-11.

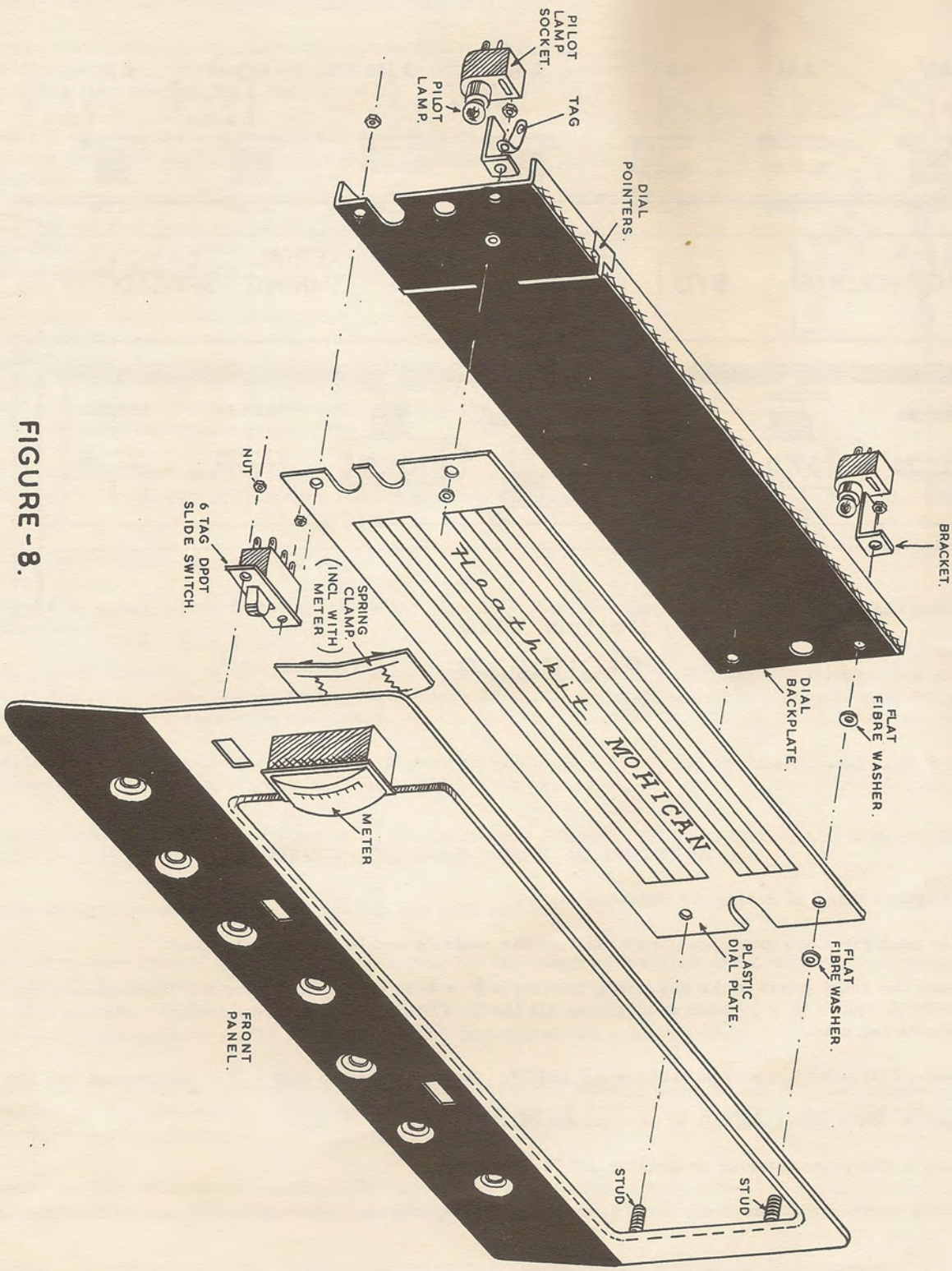
BRACKET.
FLAT FIBRE WASHER.
DIAL BACKPLATE.
FLAT FIBRE WASHER.
PLASTIC DIAL PLATE.
STUD
STUD
FRONT PANEL.
Heathkit
MOHICAN
METER
SPRING CLAMP. (INCL WITH METER)
NUT
6 TAG DPDT SLIDE SWITCH.
DIAL POINTERS.
PILOT LAMP SOCKET.
PILOT LAMP.
TAG

FIGURE-8.

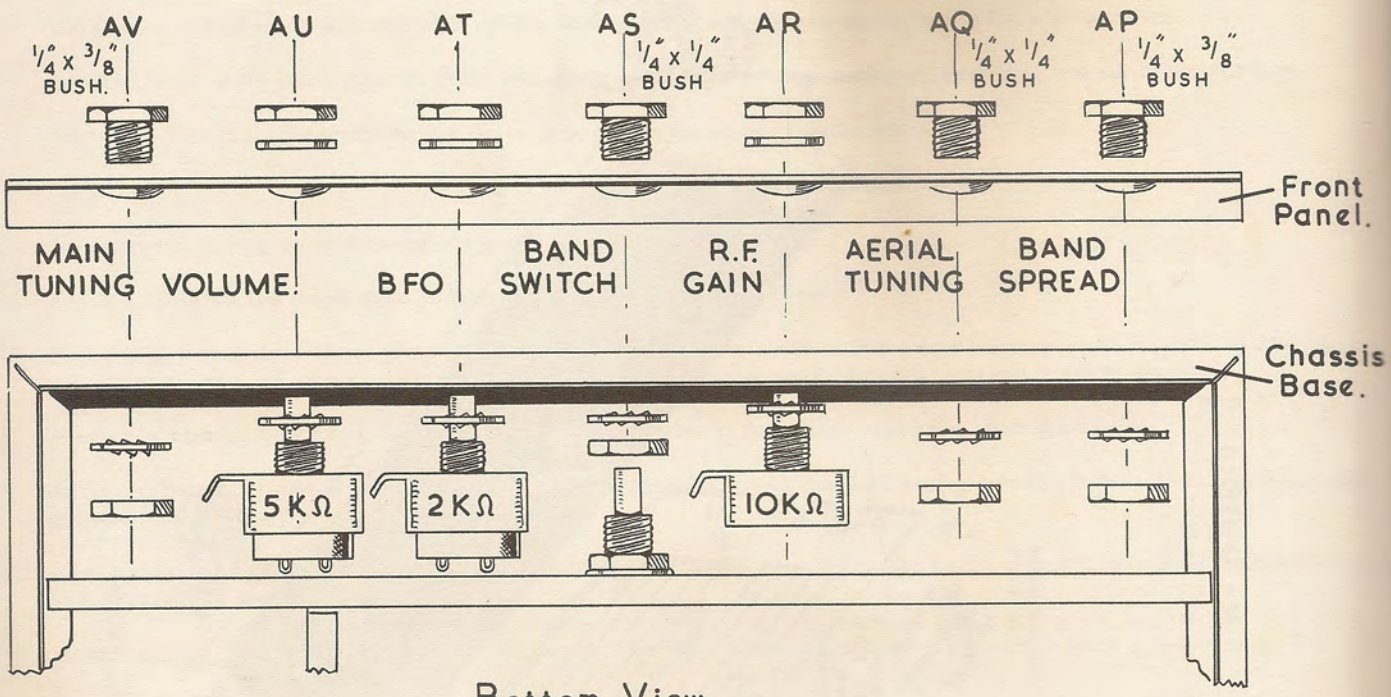

Bottom View.

FIGURE-9.

MOUNTING OF FRONT PANEL TO CHASSIS

Refer to Figures 9 and 10 during the following steps.

NOTE: Do not tighten any front panel nuts until all the controls and bushes are mounted.

(✓) Mount the front panel to the chassis by placing a ¼" x 3/8" bush at locations AP (Bandspread) and AV (MAIN TUNING), with a ¼" x ¼" bush at locations AQ (ANT. TUNING) and AS (Bandswitch). Secure with 3/8" lockwashers and nuts.

(✓) Mount a 2KΩ potentiometer at location AT (BFO). Secure as shown with a 3/8" lockwasher and nut.

(✓) Mount a 10KΩ potentiometer at location AR (R.F. GAIN).

(✓) Mount a 5KΩ potentiometer at location AU (Volume).

(✓) Making certain that the front panel is in alignment with the chassis, tighten all nuts on controls and bushes.

(✓) See detail 12 and locate two 3" tuning shafts (Part No. 453-509) two spring washers (Part No. 253-512), two 'C' rings (Part No. 253-510), and two flywheels (Part No. 608-501).

(✓) Insert one of the tuning shafts through bush AV, through a flywheel (with the grubscrews toward the rear), through a spring washer and into bush AN.

(✓) Snap a C ring into the slot as shown. Now slide the flywheel towards bush AN and temporarily tighten the grubscrews on flywheel.

(✓) Bush AN was left loose so that it could be aligned. Position this bush so that the shaft runs freely without binding, then tighten the nut on bush AN.

(✓) Now loosen the flywheel grubscrews and whilst holding the shaft forwards against the C ring, slide the flywheel towards bush AN until a slight amount of tension is placed on the spring washer. By varying the pressure on the spring washer the desired flywheel action can be obtained. Holding the flywheel in this position tighten the grubscrews.

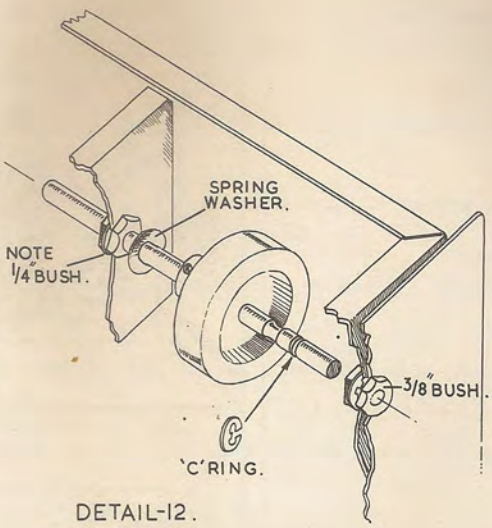

DETAIL-12.

(✓) In the same manner insert the other 3" tuning shaft into bush AP, through a flywheel (with grubscrews towards the chassis rear), through a spring washer and into bushing AM. Now position and adjust as in the previous step.

Refer to Figure 10 during the following steps.

(✓) Place a Coupling sleeve on the aerial tuning capacitor shaft approximately half way along and tighten the two grubscrews.

(✓) Insert the $\frac{1}{4}$" diameter by $5\frac{3}{4}$" insulated shaft through the aerial bushing AQ and into the coupling sleeve previously installed on the aerial tuning capacitor. Position the shaft so that it protrudes past the bush by $\frac{1}{2}$", then tighten the grubscrews on the sleeve.

(✓) Rotate the aerial capacitor to its half mesh position and place a 5/8" knob on the insulated shaft with the knob pointer in the vertical position at the top. Tighten the grubscrew.

(✓) Rotate the R.F. gain control shaft to its mid-position. Place a 5/8" knob on the shaft with the knob pointer in the vertical position at the top. Tighten the grubscrew.

(✓) In the same manner install a 5/8" knob on the BFO control.

(✓) With the volume control in the OFF position place a 5/8" knob on the shaft and orient the knob pointer to align with the OFF position. Tighten the grubscrew.

(✓) Place an adaptor sleeve on the Bandswitch shaft and tighten the grubscrews.

(✓) Insert the $\frac{1}{4}$" x 1-7/8" extension shaft (Part No. 453-510) through bush AS and into the coupling previously installed on the bandswitch. Position so that approximately 3/8" of the shaft protrudes from the front panel then tighten the grubscrew.

(✓) Check that the bandswitch is in the fully anti-clockwise position and place the $1\frac{1}{4}$" knob. Orient the white pointer to align with the "A" position and tighten the grubscrew.

(✓) Place a $1\frac{3}{4}$" knob on the Main Tuning and Bandspread Tuning Shafts, tighten the grubscrews.

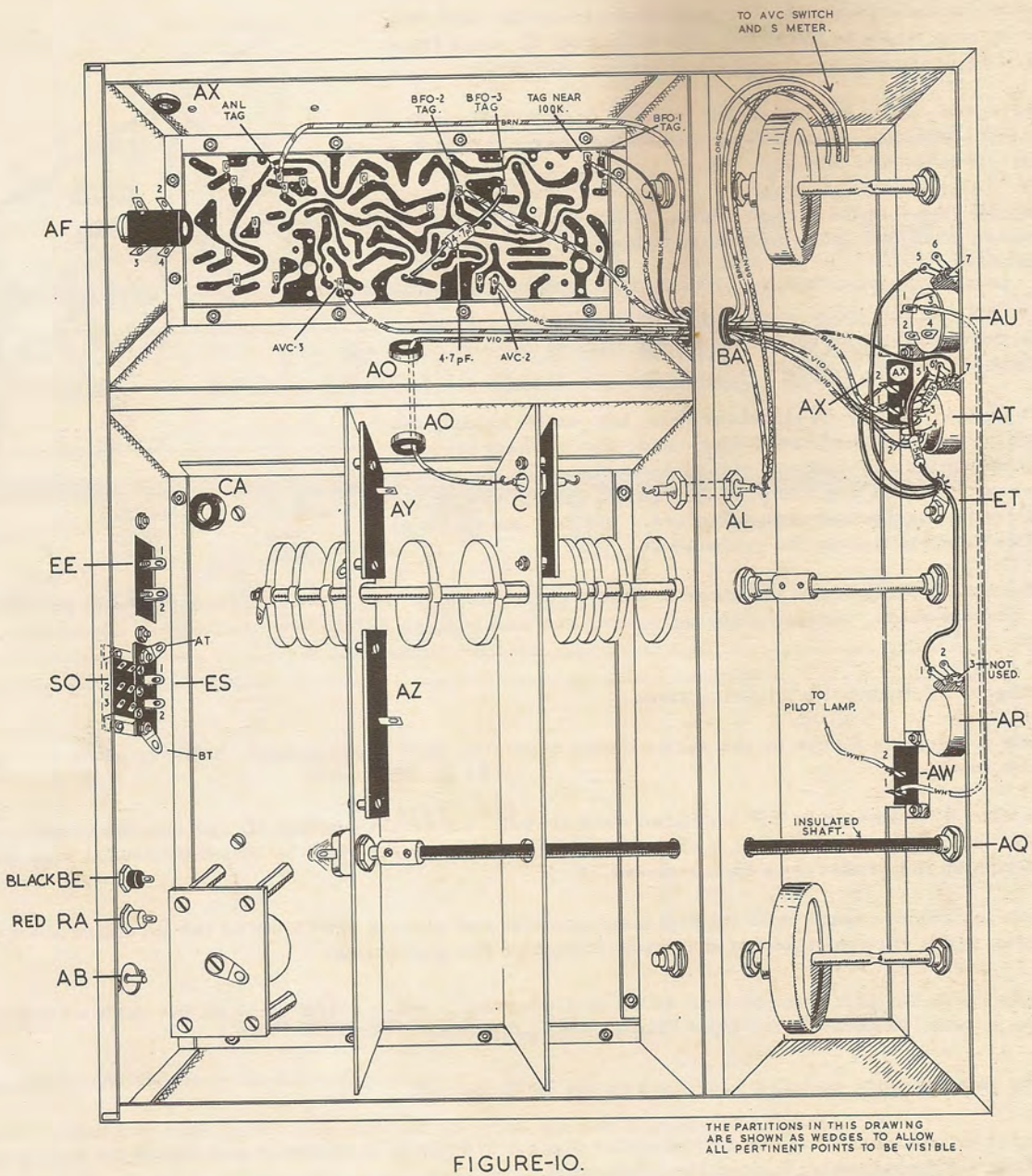

FIGURE-10.

FRONT PANEL WIRING

Refer to Figure 10 during the following steps.

(✓) Connect one end of an 8" length of White wire to slide switch AW tag 2 (S-1). The other end will be connected later.

(✓) Connect a 9" length of White wire between AW tag 1 (S-1) and volume control AU tag 1 (NS).

(✓) Connect one end of a 10" length of Violet wire to BFO switch AT tag 4 (S-1). Routing the wire through grommets BA and AO, connect the other end to capacitor C in the mixer compartment and solder, taking care not to disturb the other solder joints.

(✓) Connect one end of a 6" length of Green wire to feed-through capacitor AL(NS). Run the other end through grommet BA and connect to the solder tag near 100K resistor (S-1). Form the wire neatly against the partition.

(✓) Connect one end of a 9" length of Green wire to feed-through capacitor AL(S-2). Run this lead towards the AVC switch. Other leads will also be positioned in this manner.

(✓) Select a 1.5KΩ resistor (Brown, Green, Red) and fit a 1" length of sleeving over each wire end. Connect one end to tag 5 of control AT (S-1) and the other end to solder tag ET(NS).

(✓) Cut both wires of a 10KΩ resistor (Brown, Black, Orange) to ¾" lengths. Connect one lead to B.F.O. control AT tag 6 (S-1), connect the other wire to B.F.O. switch AT tag 3 (NS).

(✓) Connect one end of a 7" length of Violet wire to tag 3 of the B.F.O. switch, AT, (S-2). Run the other end of this wire through grommet BA and connect to the B.F.O. tag 2 (S-1).

(✓) Connect one end of a 5" length of Black wire to tag 7 of B.F.O. control AT (S-1). Run the other end through grommet BA and connect to B.F.O. tag 1 (S-1).

(✓) Cut both wires of a 4.7 pF capacitor to 1" length and fit ¾" lengths of sleeving. Connect the capacitor between B.F.O. tag 3 (S-1) and Part No. 404-40 transfilter tag that is circuit board connected to the collector (c) of X5 (S-1).

(✓) Using bare wire and sleeving, connect a 2" length between tag 2 of ANL switch AX (S-1) and the other end to solder tag ET (NS).

(✓) Using bare wire and sleeving, connect a 4" length between AU tag 5 (S-1) and solder tag ET (NS).

(✓) Using bare wire and sleeving, connect a 2" length between solder tag ET (S-4) and RF gain control AR tag 1 (NS).

(✓) Connect one end of a 13" length of Brown wire to tag 1 of ANL switch AX (S-1). Route the other end through grommet BA and connect to the ANL tag (S-1). Position as shown.

(✓) Connect one end of a 9" length of Orange wire to the AVC tag 2 (S-1). Route the other end of this wire through grommet BA and towards the AVC switch. This end will be connected later.

(✓) Connect one end of a 12" length of Brown wire to AVC tag 3 (S-1). Route the other end of this wire through grommet BA and towards the S-meter. This end will be connected later.

Refer to Figure 11 for the following steps.

(✓) Connect one end of a 10" length of Blue wire to the S-meter tag (S-1). Route the other end of this wire through grommet BA and towards the S-meter. This end will be connected later.

(✓) Connect one end of a 14" length of Yellow wire to AVC tag 4 (S-1). Route the other end through grommet BA and towards the AVC switch. This end will be connected later.

(✓) Connect one end of an 8½" length of Orange wire to tag 7 of the Volume control AU (S-1). Route the other end through grommet BA and connect to the I.F. output tag (S-1).

(✓) Connect one end of a 9" length of Red wire to AVC tag 1 (NS). Route the other end through grommet BA and towards the AVC switch.

(✓) Connect one end of a 10" length of Red wire to the R.F. gain control, AR tag 2 (NS). Route the other end through grommet BA and connect to AVC tag 1 (NS)

(✓) Connect one end of a 10" length of Red wire to AVC tag 1 (S-3). Route the other end through grommet AO and connect to R.F. amplifier circuit board, AZ tag 1 (S-1).

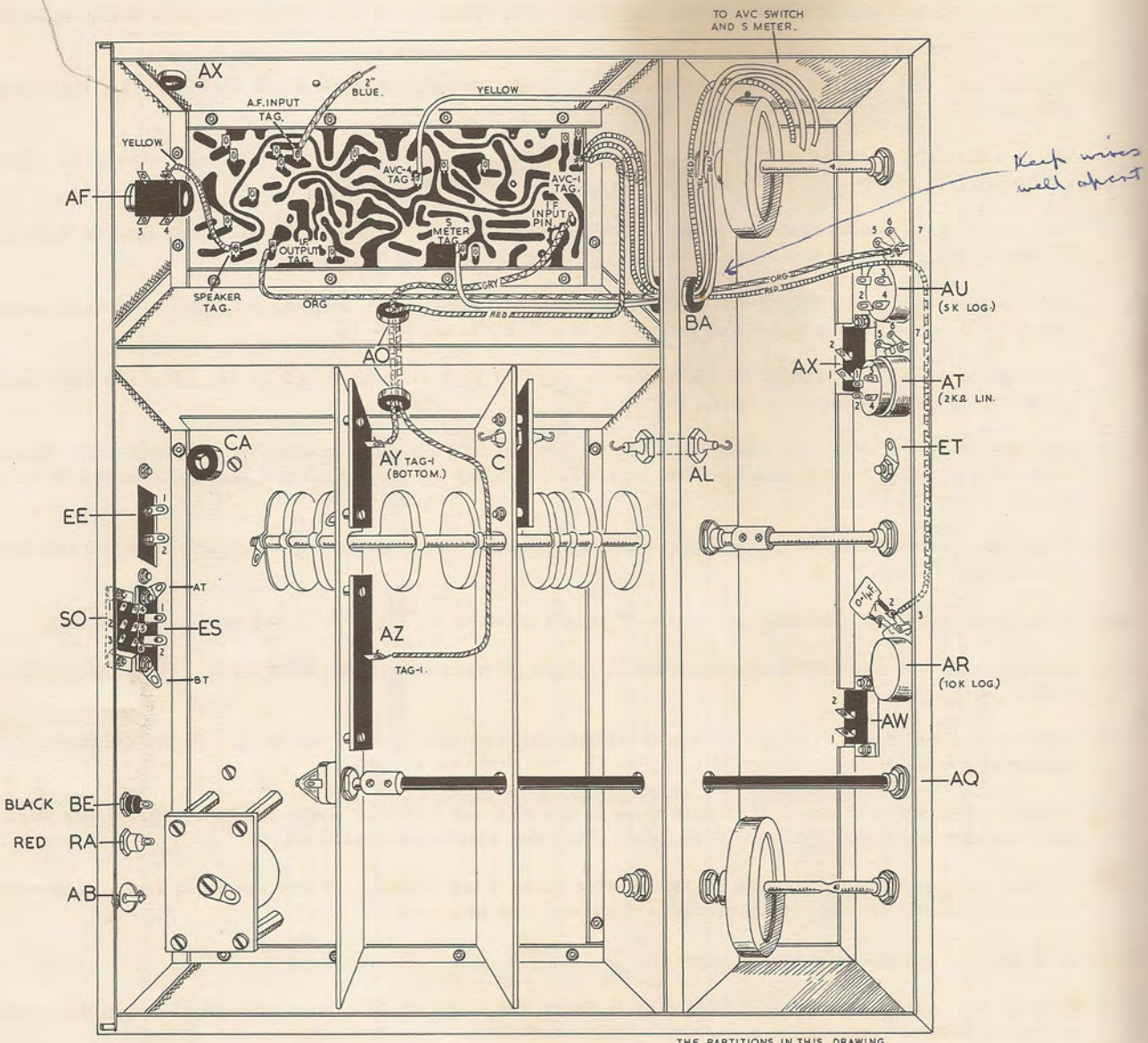

Keep wires well apart

FIGURE-11.

(✓) Cut the leads of a 0.1 μfd capacitor (Brown, Black, Yellow) to 5/8". Connect between AR tag 1 (S-2) and AR tag 2 (S-2).

(✓) Connect one end of a 6" length of Grey wire to I.F. input pin (S-1). Route the other end through grommet AO and connect to mixer circuit board, AY tag 1 (S-1).

(✓) Connect a 2½" length of Yellow wire between the circuit board Speaker tag 1 (S-1) and the phone jack AF tag 2 (S-1).

(✓) Connect one end of a 2" length of Blue wire to the AF INPUT tag (S-1). The other end will be connected later

TOP CHASSIS WIRING

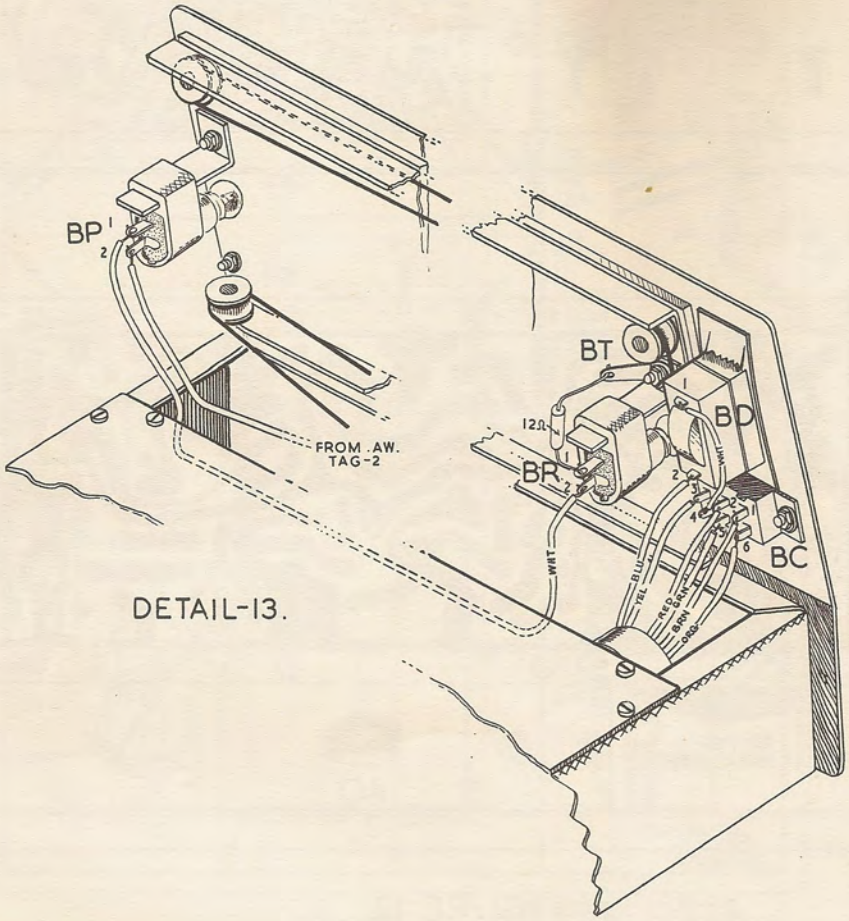

(✓) Position the chassis as shown in detail 13.

(✓) Connect one end of a 15" length of White wire to lampholder BR tag 2 (S-1) connect the other end to lampholder BP tag 1 (S-1).

(✓) Connect a 12Ω resistor (Brown, Red, Black) between solder tag BT (S-1) and lampholder BR tag 1 (S-1).

(✓) Connect the White wire from AW tag 2 to BP2 (S-1).

NOTE:- The following wires are connected to the AVC switch and S-meter. After connecting they should be bunched together and routed clear of the flywheel.

(✓) Connect the Green wire to tag 5 of AVC switch BC (S-1).

(✓) Connect the Orange wire to tag 6 of BC (S-1).

(✓) Connect the Yellow wire to tag 3 of BC (S-1).

(✓) Connect the Red wire to tag 2 of BC (S-1).

(✓) Connect the Brown wire to tag 1 of BC (S-1).

(✓) Connect the Blue wire to the S-meter BD tag 2 (S-1).

(✓) Connect a 4" length of White wire between tag 1 of BD (S-1) and tag 4 of BC (S-1).

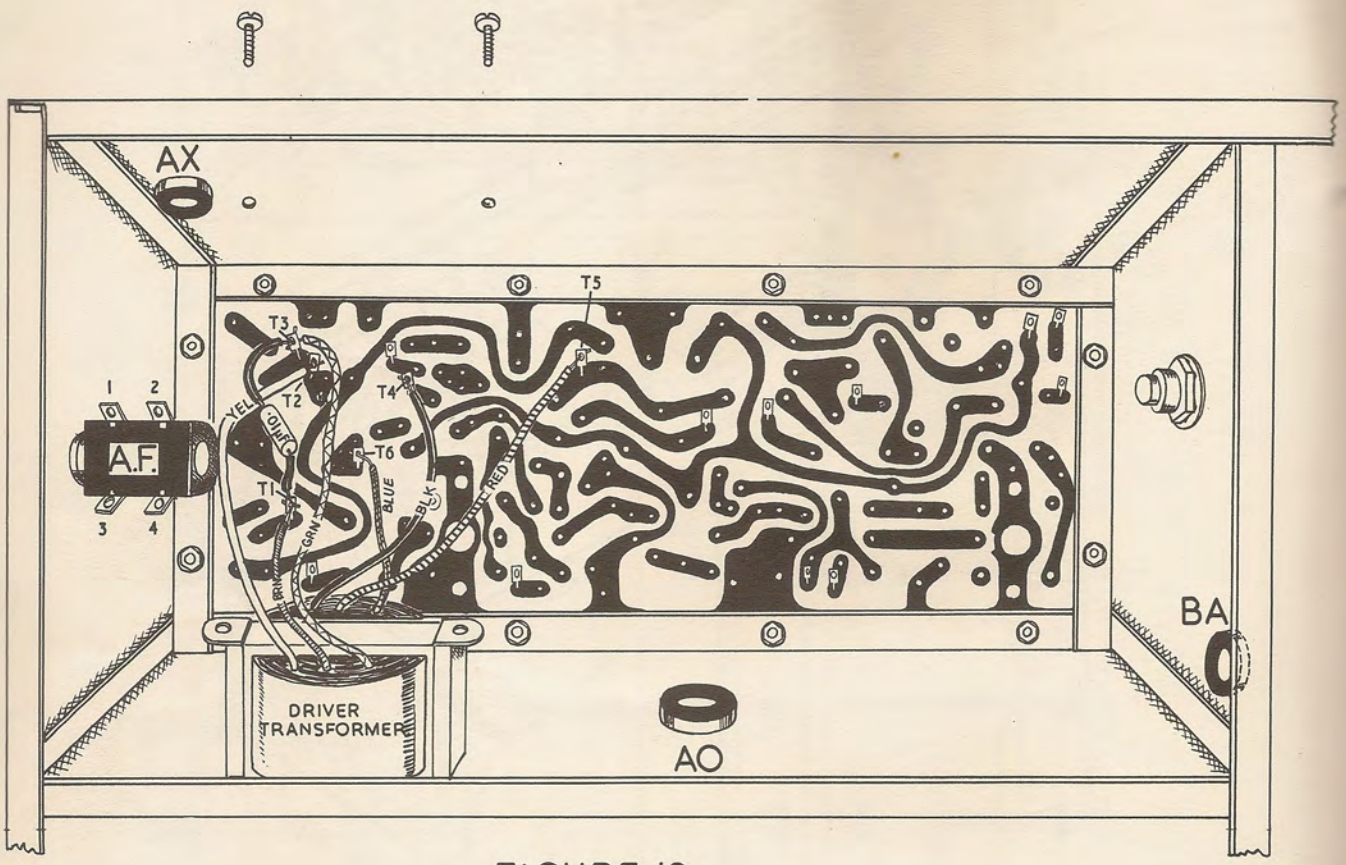

FIGURE.12

Refer to Figure 12 for the following steps.

(✓) Position the receiver on its side with the IF circuit board at the top.

(✓) Insert a 3/8" grommet at location AX.

(✓) Connect a .01 μF tubular ceramic capacitor between T3 (NS) and T1(NS). Use sleeving.

(✓) Locate the driver transformer (Part No. 51-510 and position on the chassis partition as shown with the Green, Brown and Yellow wires nearest the chassis bottom.

(✓) Connect the Red lead to tag T5 (S-1).

(✓) Connect the Black lead to T4 (S-1).

(✓) Connect the Yellow lead to T2 (S-1).

(✓) Connect the Green lead to T3 (S-2).

(✓) Connect the Brown lead to T1 (S-2).

(✓) Connect the Blue lead to T6 (S-1).

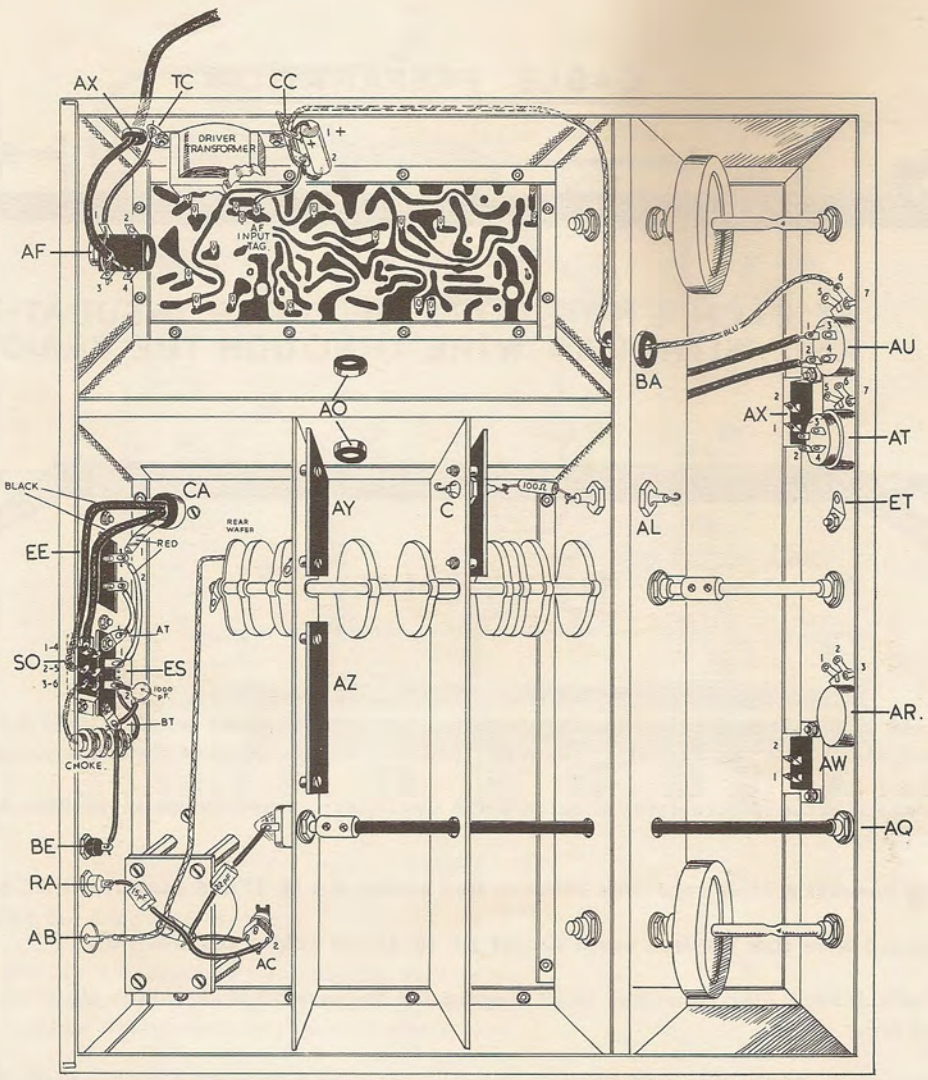

FIGURE-13.

THE PARTITIONS IN THIS DRAWING ARE SHOWN AS WEDGES TO ALLOW ALL PERTINENT POINTS TO BE VISIBLE.

Refer to Figure 13 for the following steps.

(✓) Mount the driver transformer, using 4BA x $\frac{1}{4}$" screws and nuts. On the right-hand screw mount a 2-way tagstrip at location CC, and on the left-hand screw mount a 4BA solder tag at location TC.

(✓) Connect the free end of the Blue wire previously connected to the A.F. input tag, to tag 2 of tagstrip CC(NS).

(✓) Connect one end of an 8" length of Blue wire to tag 1 of tagstrip CC(NS). Route the other end through grommet BA and connect to tag 6 (centre tag) of the Volume Control AU (S-1).

Connect a 50,000 pf (GREEN, BLACK, ORANGE) between Tags 6 + 7 on V/control AU

(✓) Cut both leads of a 50μfd capacitor to $\frac{3}{4}$" lengths. Connect the positive lead (Red, +) to tag 1 of tagstrip CC (S-2). Connect the other lead to tag 2 of tagstrip CC (S-2).

(✓) Connect one end of a $2\frac{1}{2}$" length of bare wire to solder tag TC (S-1). Thread the other end through phone jack AF 1 (S-1) and 3 (NS).

(✓) Prepare a ~~16"~~ 22" length of screened cable as shown in Detail 14.

CABLE PREPARATION.

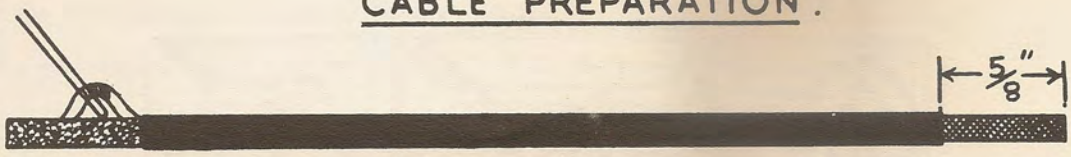

AT EACH END STRIP OFF OUTER INSULATION AND WITHDRAW WIRE THROUGH THE BRAIDING.

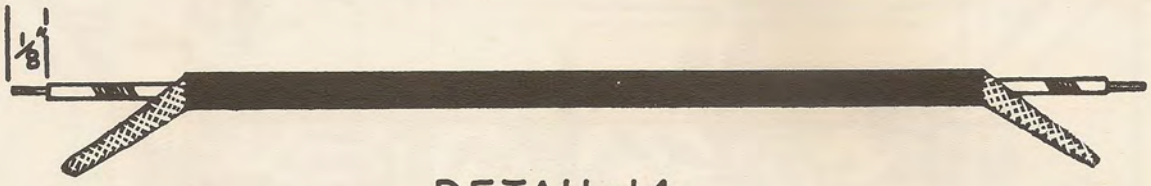

DETAIL-14.

(✓) Thread one end of a screened cable through grommet AX. Connect the inner wire to AF tag 4 (S-1) and the outer screened wire to AF tag 3 (S-2). The other end will be connected to the loudspeaker tags later.

(✓) Connect the free end of the 100Ω resistor situated in the Oscillator compartment of the Coil Pack to feed through capacitor AL (S-1).

(✓) Using sleeving connect a 15pF capacitor between Red socket RA (S-1) and aerial coil AC tag 2 (S-1).

(✓) Connect a sleeved wire link between earth socket BE (S-1) and solder tag BT (NS).

(✓) Cut the leads of a 1000pF disc capacitor to ½" lengths and connect between solder tag BT (S-2) and to the two pin socket ES tag 2 (NS).

(✓) Using ¾" sleeving on each wire end connect the 1.1 mH choke between ES tag 2 (S-2) and switch SO tags 3 (S-1) and 6 (S-1).

(✓) Connect a wire link between solder tag AT (S-1) and EE tag 2 (S-1). Use sleeving

(✓) Connect a 3" length of Red wire between ES tag 1 (S-1) and EE tag 1 (NS).

(✓) Connect one end of a 16" length of Black rubber covered flexible wire to AU tag 2 (S-1). Route the other end along the edge of circuit board (see figure 14) and through grommet CA to switch SO tags 2 (S-1) and 5 (S-1).

(✓) Connect one end of a 10" length of Black rubber covered flexible wire to AU tag 1 (S-2). Route the other end along the edge of circuit board to - 12 volt pin (S-1). See also figure 14.

(✓) Connect one end of a 9" length of Black rubber covered flexible wire to switch SO tags 1 (S-1) and 4 (S-1). Route the other end through grommet CA, to be connected later.

(✓) Connect one end of an 8" length of Red rubber covered flexible wire to EE tag 1 (S-2). Route the other end through grommet CA, to be connected later.

(✓) Connect the Blue wire coming from the rear wafer of the Coil Pack Bandswitch to socket AB (S-1).

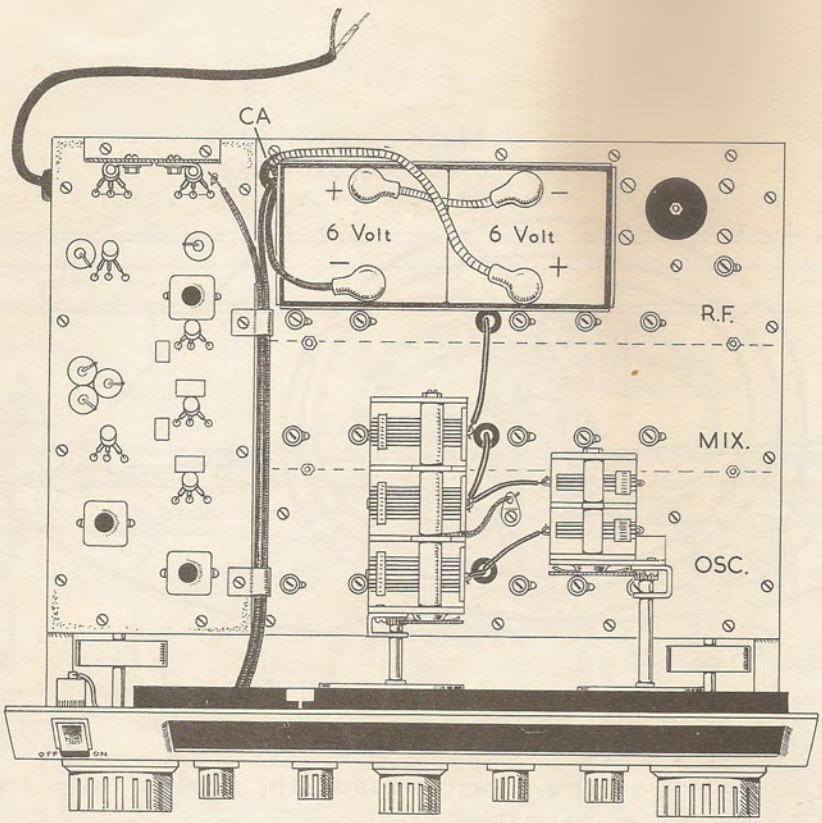

FIGURE - 14

Refer to Figure 14 for the following steps.

(✓) Connect and solder a 4" length of Red flexible wire between a positive (copper coloured) and negative battery connector. Snap on a Polythene cover on each connector.

(✓) In the same manner connect and solder a positive (copper coloured) connector to the Red wire coming through grommet CA.

(✓) Connect and solder the remaining negative connector to the Black wire coming through grommet CA.

(✓) Install as shown in figure 14 two 6 volt dry batteries. (These are not supplied, obtain Ever Ready type PP1 or equivalent).

(✓) Connect the Black lead connector to Negative (-) connector on the left-hand battery.

(✓) Connect the Red lead connector to the Positive (+) connector on the right-hand battery.

(✓) Connect the previously assembled connectors between the Positive and Negative connectors of the battery.

( ) Install as shown the two cable clamps secure with 6BA screws, lockwashers and nuts.

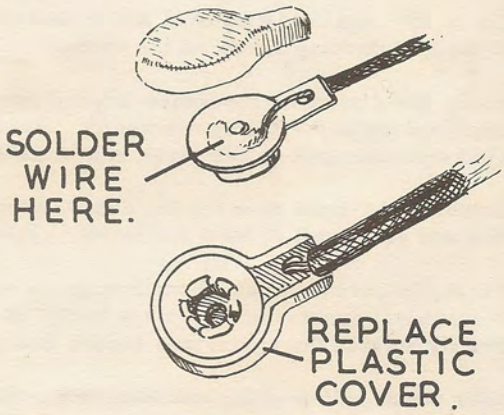

DETAIL-15.

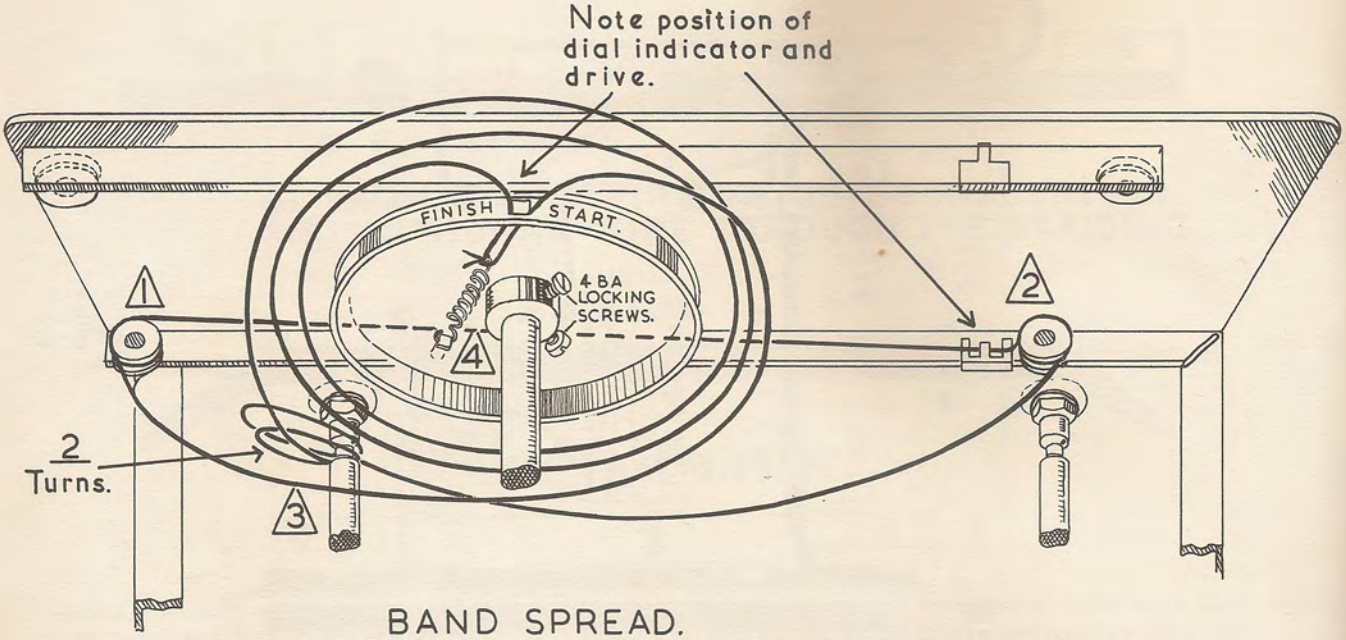

BAND SPREAD.

Drum position shown with capacitor plates fully meshed.

FIGURE-15

BANDSPREAD CAPACITOR

Refer to Figure 15 for the following steps.

( ) Cut a 55" length of dial cord and thread one end 3" through the drum slot. Now temporarily anchor this end to the 4BA locking screw on the drum.

( ) Route the dial cord clockwise around the drum for one half turn. Continue the cord around the pulley marked 1 and on to the pulley marked 2. Route the cord back to the Bandspread tuning drive shaft marked 3 and wind on to the groove two turns in a clockwise direction.

( ) Continue the cord towards the drum and wind on, clockwise, $2\frac{1}{4}$ turns, then thread the end through the drum slot and pull tight.

( ) Taking the cord ends pass them through the eye of a spring and tie a knot as close as possible to the drum slot.

( ) Finally stretch the spring and anchor it to the tag on the drum, marked 4

( ) With the capacitor fully meshed, slide the dial pointer against the pulley, marked 2. Now fasten the dial pointer to the dial cord by bending the metal tabs over the cord. Final positioning of the dial drum will be accomplished later as per the instructions in the section on RECEIVER ALIGNMENT.

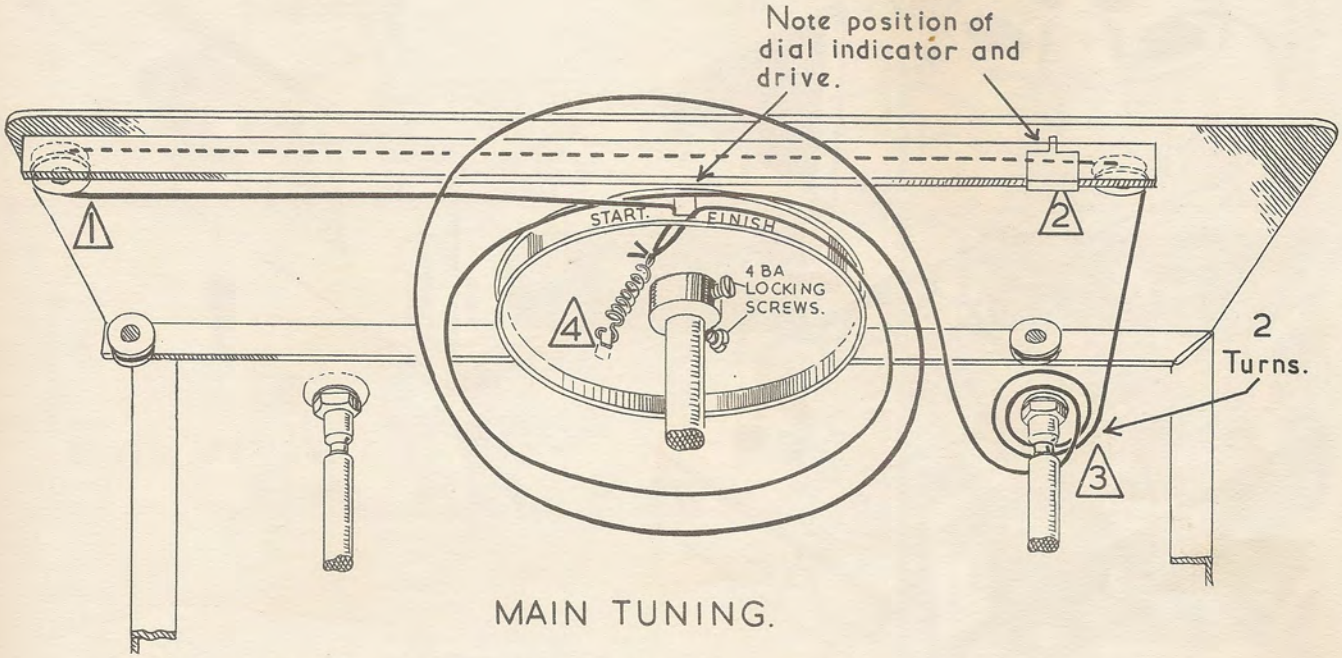

MAIN TUNING.

Drum position shown with capacitor plates fully meshed.

FIGURE-16

Refer to Figure 16 for the following steps.

( ) Locate the other length of dial cord and thread one end 3" through the drum slot. Now temporarily anchor this end to nearest 4BA locking screw on the drum.-

( ) Continue the cord on to pulley marked 1 and on to pulley marked 2 Route the cord to the MAIN TUNING drive shaft 3 and wind on two turns in a clockwise direction.

( ) Continue the cord towards the drum and wind on $2\frac{1}{4}$" turns and thread the cord end through the drum slot and pull tight.

( ) Taking the cord ends pass them through the eye of a spring and tie a knot as close as possible to the drum slot.

( ) Finally stretch the spring and anchor it to the tag on the drum marked 4

( ) With the 3 gang capacitor fully meshed slide the dial pointer against the pulley marked 2 Now fasten the dial pointer to the dial cord by bending the metal tabs over the cord. Final positioning of the dial drum will be accomplished later as per the instructions in the section on RECEIVER ALIGNMENT.

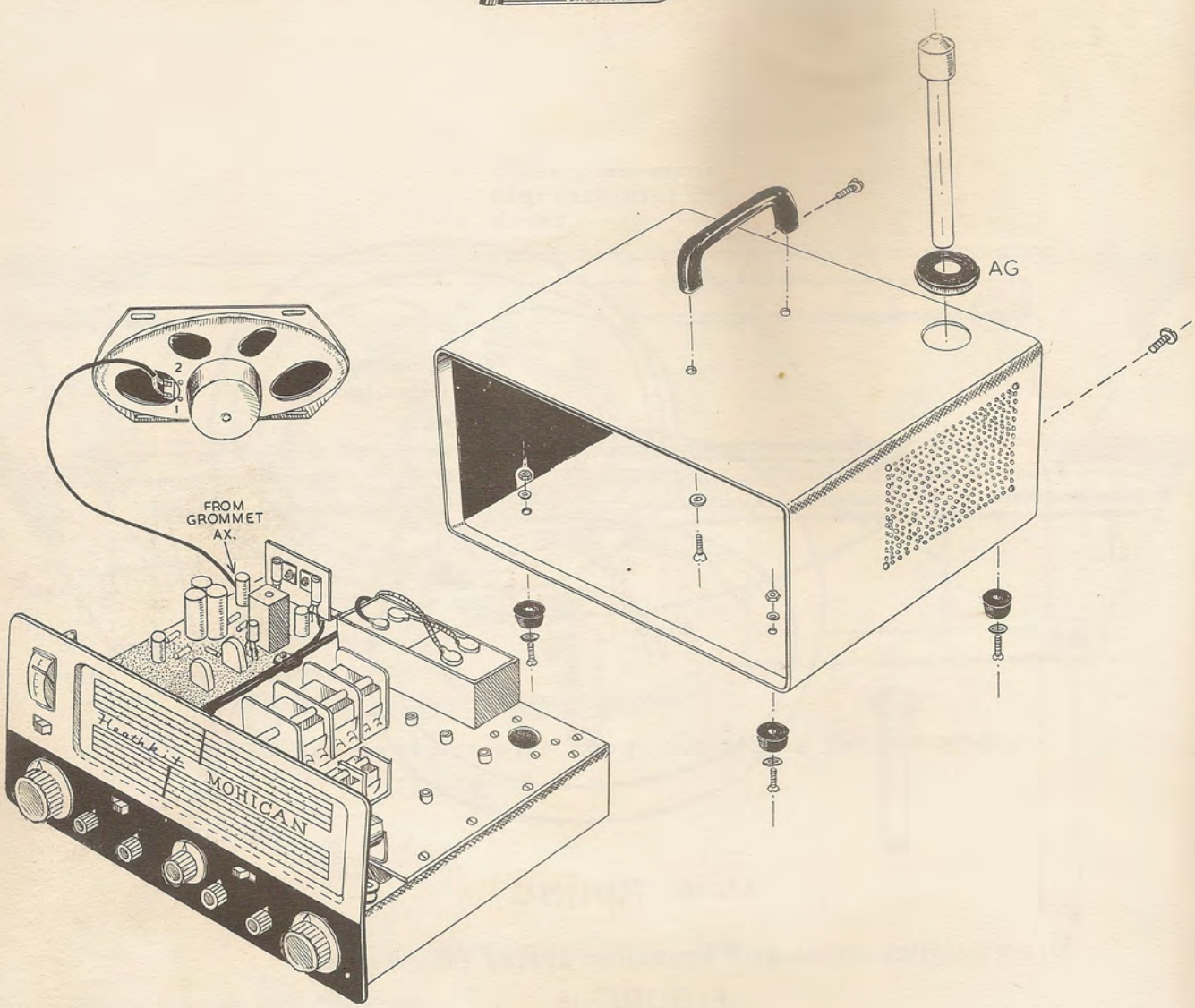

FIGURE. 17.
CABINET ASSEMBLY

Refer to Figure 17 for the following steps.

(✓) Fasten the handle to the cabinet with 4BA x $\frac{1}{4}$" screws and lockwashers under the screw head.

(✓) Install the four rubber feet using 2BA x ~~5/8"~~ $\frac{1}{2}$" screws, Flatwashers lockwashers and nuts.

(✓) Connect the screened wire coming through grommet AX to the loudspeaker tag 1 (S-1) with the inner wire to tag 2 (S-1).

(✓) Carefully mount the speaker inside the cabinet over the studs with the tags facing forward. Secure with ~~6-32~~ 4BA lockwashers and nuts.

(✓) Install the large grommet in hole AG.

NOTE
After the preliminary tests slide the completed chassis inside the cabinet making sure the speaker cable is positioned at the rear of the battery box. Secure with 4BA x $\frac{1}{4}$" screws into the tapped bushes in the rear of chassis. Finally insert the rod aerial through the grommet, until it engages with the mounting screw. Then rotate in a clockwise direction until it is tight against the nut on the aerial mounting board.

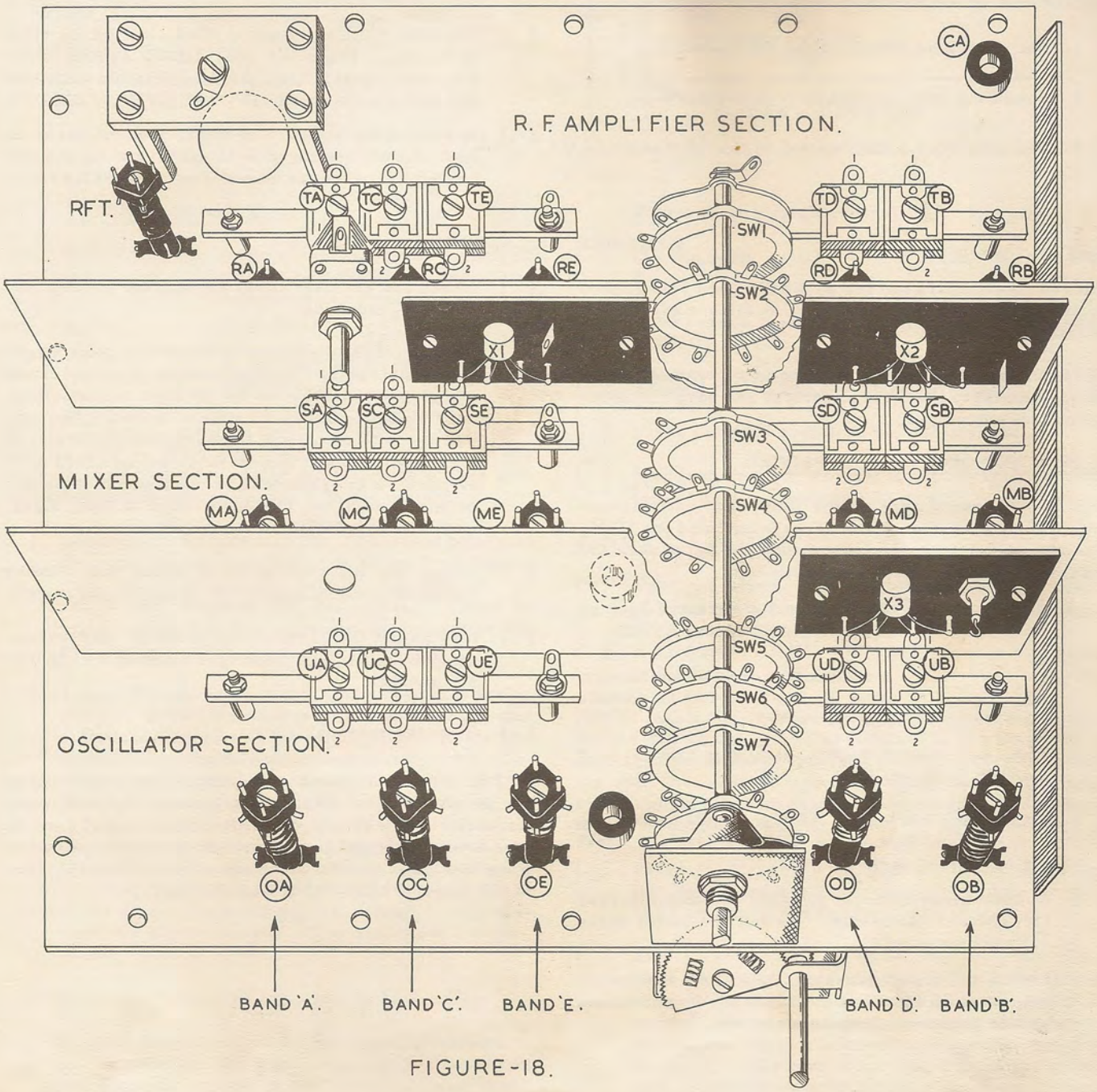
R. F. AMPLIFIER SECTION.
MIXER SECTION.
OSCILLATOR SECTION.
RFT.
CA
TA
TC
TE
TD
TB
RA
RC
RE
RD
RB
SW1
SW2
SW3
SW4
SW5
SW6
SW7
X1
X2
X3
SA
SC
SE
SD
SB
MA
MC
ME
MD
MB
UA
UC
UE
UD
UB
OA
OC
OE
OD
OB
BAND 'A'.
BAND 'C'.
BAND 'E'.
BAND 'D'.
BAND 'B'.

FIGURE-18.

PRELIMINARY TESTS

( ) Rotate the VOLUME CONTROL anti-clockwise to the OFF position.

( ) Place the AVC switch to the ON position.

( ) Place the ANL switch to the OFF position.

( ) Rotate the BFO control fully anti-clockwise.

( ) Place the DIAL LIGHT switch to the OFF position.

( ) Connect 1½" length of bare wire between screw 1 and 2 of the muting terminal strip EE. This link may be removed later as explained in the OPERATION section.

( ) Turn the VOLUME control clockwise until a click is heard. Place the Dial LIGHT switch to on. If the dial lights fail to light, immediately switch off and refer to the section IN CASE OF DIFFICULTY.

( ) If everything appears normal, i.e. no wires or components heating due to incorrect or shorted wiring, proceed as under section OPERATION.

RECEIVER ALIGNMENT

The IF transformers and coil pack have been pre-aligned to factory standards, therefore, no further adjustment should be necessary.

The following alignment procedure is recommended for those who wish to check the alignment and have the necessary test equipment.

ALIGNMENT OF THE IF AMPLIFIER

NOTE: The transfilters set the width and centre frequency if the top portion of the IF passband and the IF input and output transformers need only be peaked for maximum gain and skirt selectivity.

Equipment Required: An RF signal generator, such as the HEATHKIT model RF-1U.

A multimeter or valve voltmeter, such as the HEATHKIT models MM-1U or V-7A.

( ) Turn the Volume control fully anti-clockwise to the OFF position.

( ) Connect the hot lead of RF signal generator via a 0.1μFD capacitor to the IF input tag. Connect the earth lead to the chassis.

( ) Connect the multimeter or valve voltmeter across the speaker terminals. Switch the meter to the 1.5 volt range AC.

( ) Switch the signal generator on and set the frequency dial to 455 Kc/s. The depth of modulation should be set to approximately 30%.

( ) Switch the receiver on by turning the volume control fully clockwise.

( ) Obtain a 1/8" diameter screwdriver point alignment tool (a plastic knitting needle is suitable) and adjust the top core of the IF input transformer, until the meter reads maximum output. Now adjust the bottom core in the same transformer for maximum output. Repeat these adjustments until all possible interaction is eliminated which should be made with the minimum level of input signal required to indicate on the output meter.

( ) Adjust the top core of the IF output transformer until peak reading is obtained on the output meter.

( ) Now adjust the bottom core in the IF output transformer until peak reading is obtained on the output meter.

( ) Turn the receiver OFF.

NOTE: This completes the preliminary alignment of the IF amplifier. The final alignment of the IF input transformer will be completed after alignment of band A. Disconnect the signal generator. Leave the output meter connected for alignment of the rest of the receiver. (See NOTE under FRONT END ALIGNMENT.)

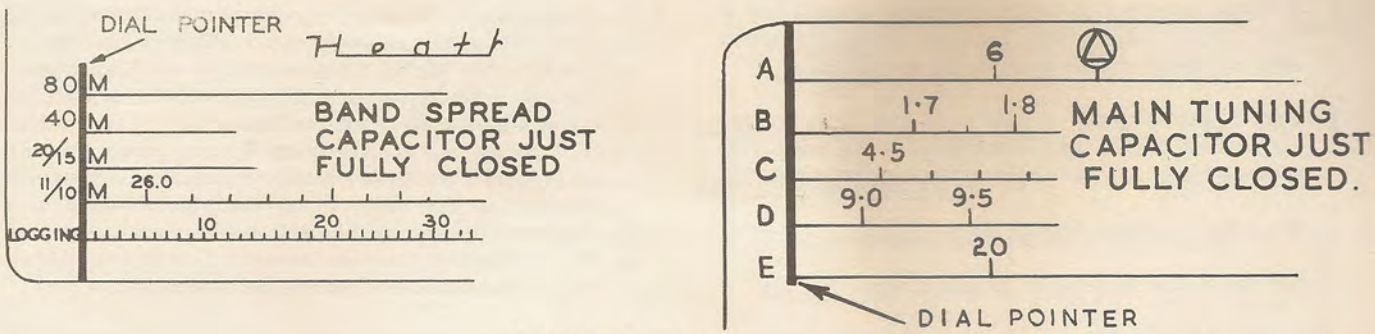

DETAIL-16.

FRONT END ALIGNMENT

Equipment Required: An RF signal generator capable of delivering a modulated signal within a frequency range of 500 Kc/s to 30 Mc/s.

A vacuum tube voltmeter or a multimeter.

NOTE: The built-in signal indicating meter can be used equally well to align the front end assembly. If the built-in meter is used, align the following stages with enough signal to indicate about 5 on the meter.

( ) Loosen the setscrew in the dial string pulley on the main tuning capacitor. With the main tuning capacitor fully closed, set the dial pointer as shown and retighten the setscrews. Check to make certain that this alignment is correct or the receiver's calibration will be incorrect.

( ) Loosen the setscrew in the bandspread dial string pulley. Rotate the bandspread knob until the dial pointer is aligned with the vertical line on the left end of the calibrated bandspread portion of the dial. Now rotate the bandspread capacitor shaft until it is at full mesh. Now tighten the setscrews.

( ) Check to make sure that the bandspread capacitor is nearly fully open and the dial pointer is aligned with the "SET" position on the bandspread portion of the dial. This setting will remain in this position for the remainder of the alignment instructions.

( ) Set the aerial tuning capacitor to half mesh.

( ) Connect the hot lead of the RF signal generator to the external aerial input terminal on the rear of the chassis. Connect the screened lead to the Black earth terminal.

( ) If an output meter is used it should be set on the AC range and connected across the speaker terminals.

( ) Rotate the RF GAIN control fully clockwise.

( ) Set the band switch to band A (550 Kc/s to 1600 Kc/s).

( ) Make certain that the BFO knob is in its OFF position.

( ) Place the ANL switch in OFF position.

( ) Place the AVC switch in the ON position.

( ) Now turn the receiver ON and the VOLUME control clockwise about one-half turn.

BAND A ALIGNMENT

( ) Tune the signal generator to 1500 Kc/s. Apply 30% modulation to the RF signal.

( ) Rotate the MAIN TUNING knob until the dial pointer indicates 1500 Kc/s.

NOTE: In all alignment steps, as the adjustments peak, reduce the signal generator's output to the lowest possible level so as not to overload the receiver. If aligning with the built in signal indicating meter, the input signal should be decreased, as the cores and trimmers peak, to midscale reading, about "5" on the meter.

( ) Refer to Figure 18 on page 41 which shows the RF, mixer and oscillator sections and the associated coil core and trimmer adjustments.

( ) Slowly tune the signal generator back and forth until the audio note is heard. Check the frequency of this signal as indicated on the signal generator. Return the signal generator to 1500 Kc/s. If the signal heard was lower in frequency than 1500 Kc/s, rotate the band A oscillator trimmer screw anti-clockwise until the signal is heard and peaked on the meter. If the signal heard was higher in frequency than 1500 Kc/s, rotate the band A oscillator trimmer screw clockwise until the signal is heard and peaked on the meter.

( ) With the receiver and signal generator still set at 1500 Kc/s, adjust the band A mixer trimmer until the peak meter reading is indicated.

( ) Once again, with the receiver and signal generator set at 1500 Kc/s, adjust the band A RF amplifier trimmer until the peak meter reading is indicated.

( ) Tune the receiver to 600 Kc/s.

( ) Set the signal generator to 600 Kc/s.

NOTE: The RF amplifier, mixer and oscillator coils are already aligned so only a very slight amount of adjustment should be required to correctly align the bottom end of each band. If a large number of turns is required to bring the coil into resonance, recheck the wiring.

( ) Slowly tune the signal generator back and forth until the audio note is heard. Check the frequency of this signal as indicated on the signal generator. Return the signal generator to 600 Kc/s. If the signal heard was lower in frequency than 600 Kc/s turn the band A oscillator coil core anti-clockwise until the signal is heard and peaked on the meter. If the signal heard was higher in frequency than 600 Kc/s, turn the band A oscillator coil core clockwise until the signal is heard and peaked on the meter.

( ) With the receiver and signal generator still set at 600 Kc/s, adjust the band A mixer coil core until the peak meter reading is indicated.

( ) Once again, with the receiver and signal generator set at 600 Kc/s, adjust the band A RF amplifier coil core until the peak meter reading is indicated.

( ) Due to the interaction between the coil and the trimmers, repeat the preceding 8 steps several times in sequence until the signal is correctly aligned to the calibration points. Be sure to accurately reset the signal generator each time to the proper frequencies during this sequence of operations.

( ) Set the receiver and signal generator to 1600 Kc/s. Now adjust both the upper and lower cores in the IF transformers for peak output.

This completes the band A and IF amplifier alignment.

BAND B ALIGNMENT

( ) Tune the signal generator to 4.0 Mc/s. Apply 30% modulation to the RF signal.

( ) Set the band switch to band B.

( ) Rotate the main tuning knob until the dial pointer indicates 4.0 Mc/s.

( ) Slowly tune the signal generator back and forth until the audio note is heard. Check the frequency of this signal as indicated on the signal generator. Return the signal generator to 4.0 Mc/s. If the signal generator was lower in frequency than 4.0 Mc/s, rotate the band B oscillator trimmer screw anti-clockwise until the signal is heard and peaked on the meter. If the signal heard was higher in frequency than 4.0 Mc/s, rotate the band B oscillator trimmer screw clockwise until the signal is heard and peaked on the meter.

( ) With the receiver and signal generator set at 4.0 Mc/s, adjust the band B mixer trimmer until the peak meter reading is indicated.

( ) Once again with the receiver and signal generator set at 4.0 Mc/s, adjust the band B, RF amplifier trimmer until the peak meter reading is indicated.

( ) Tune the receiver to 1800 Kc/s.

( ) Set the signal generator to 1800 Kc/s.

( ) Tune the signal generator back and forth until the modulated alignment signal is heard. Check the frequency of this signal as indicated on the signal generator. Return the signal generator to 1800 Kc/s. If the signal heard was lower in frequency than 1800 Kc/s, turn the band B oscillator core anti-clockwise until the signal peaks on the meter. If the signal heard was higher in frequency than 1800 Kc/s, turn the band B oscillator core anti-clockwise until the signal peaks on the meter.

( ) With the receiver and signal generator still set at 1800 Kc/s, adjust the band B mixer core until the peak meter reading is indicated.

( ) Once again with the receiver and signal generator set at 1800 Kc/s, adjust the band B RF amplifier core until the peak meter reading is indicated.

( ) The coils and trimmers will interact and the preceding steps should be repeated until the peak output occurs on the two alignment points.

This completes the band B alignment.

BAND C ALIGNMENT

( ) Tune the signal generator to 8.5 Mc/s.

( ) Set the band switch to band C.

( ) Rotate the MAIN TUNING knob until the dial pointer indicates 8.5 Mc/s.

( ) Slowly tune the signal generator back and forth until the audio note is heard. Check the frequency of this signal as indicated on the signal generator. Return the signal generator to 8.5 Mc/s. If the signal generator was lower in frequency than 8.5 Mc/s, rotate the band C oscillator trimmer screw anti-clockwise until the signal is heard and peaked on the meter. If the signal heard was higher in frequency than 8.5 Mc/s, rotate the band C oscillator trimmer screw clockwise until the signal is heard and peaked on the meter.

( ) Leave the receiver set at 8.5 Mc/s. Tune the signal generator to 9.41 Mc/s. A second signal should be audible. This is the image frequency. This signal should be down in magnitude when the tuner assembly is correctly aligned. Tune the signal generator to 7.59 Mc/s. If the alignment signal is heard at this frequency, the oscillator is incorrectly set 455 Kc/s below the incoming signal. If this should occur, decrease the trimmer anti-clockwise until the second signal is heard and peaked on the meter.

( ) With the receiver and signal generator set at 8.5 Mc/s adjust the band C mixer trimmer until the peak meter reading is indicated.

( ) Tune the receiver to 4.5 Mc/s.

( ) Set the signal generator to 4.5 Mc/s.

( ) Tune the signal generator back and forth until the modulated alignment signal is heard. Check the frequency of this signal as indicated on the signal generator. Return the signal generator to 4.5 Mc/s. If the signal heard was lower in frequency than 4.5 Mc/s, turn the band C oscillator core anti-clockwise until the signal peaks on the meter. If the signal heard was higher in frequency than 4.5 Mc/s, turn the band C oscillator core clockwise until the signal peaks on the meter.

( ) Leave the receiver set at 4.5 Mc/s. Tune the signal generator to 5.41 Mc/s. A second signal should be audible; this is the image frequency. This signal should be down in magnitude when the tuner assembly is correctly aligned. Tune the signal generator to 3.59 Mc/s. If the alignment signal is heard at this frequency, the oscillator is incorrectly set 455 Kc/s below the incoming signal. If this should occur decrease the oscillator inductance by turning the band C oscillator core anti-clockwise until the alignment signal is heard.

( ) With the receiver and signal generator set at 4.5 Mc/s, adjust the band C mixer core until the peak meter reading is indicated.

( ) The coils and trimmers will interact and the preceding steps should be repeated until the peak output occurs on the two alignment points.

This completes the Band C alignment.

BAND D ALIGNMENT

( ) Tune the signal generator to 19.0 Mc/s.

( ) Set the band switch to band D.

( ) Rotate the MAIN TUNING knob until the dial pointer indicates 19.0 Mc/s.

( ) Slowly tune the signal generator back and forth until the audio note is heard. Check the frequency of this signal as indicated on the signal generator. Return the signal generator to 19.0 Mc/s. If the signal generator was lower in frequency than 19.0 Mc/s, rotate the band D oscillator trimmer screw anti-clockwise until the signal is heard and peaked on the meter. If the signal was higher in frequency than 19.0 Mc/s, rotate the band D oscillator trimmer screw anti-clockwise until the signal is heard and peaked on the meter.

( ) Leave the receiver set at 19.0 Mc/s. Tune the signal generator to 19.91 Mc/s. A second signal should be audible; this is the image frequency. This signal should be down in magnitude when the tuner assembly is correctly aligned. Tune the signal generator to 18.09 Mc/s. If the alignment signal is heard at this frequency, the oscillator is incorrectly set 455 Kc/s below the incoming signal. If this should occur, decrease the trimmer capacity by turning the band D oscillator trimmer anti-clockwise until the second signal is heard and peaked on the meter.

( ) With the receiver and signal generator set at 19.0 Mc/s, adjust the band D mixer trimmer until the peak meter reading is indicated.

( ) Tune the receiver to 9.5 Mc/s.

( ) Set the signal generator to 9.5 Mc/s.

( ) Tune the signal generator back and forth until the modulated alignment signal is heard. Check the frequency of this signal as indicated on the signal generator. Return the signal generator to 9.5 Mc/s. If the signal heard was lower in frequency than 9.5 Mc/s, turn the band D oscillator core anti-clockwise until the signal peaks on the meter. If the signal heard was higher in frequency than 9.5 Mc/s, turn the band D oscillator core clockwise until the signal peaks on the meter.

( ) Leave the receiver set at 9.5 Mc/s. Tune the signal generator to 10.41 Mc/s. A second signal should be audible; this is the image frequency. This signal should be down in magnitude when the tuner assembly is correctly aligned. Tune the signal generator to 8.59 Mc/s. If the alignment signal is heard at this frequency, the oscillator is incorrectly set 455 Kc/s. below the incoming signal. If this should occur, decrease the oscillator inductance by turning the band D oscillator core anti-clockwise until the alignment signal is heard.

( ) With the receiver and signal generator set at 9.5 Mc/s, adjust the band D mixer core until the peak meter reading is indicated.

( ) With the receiver and the signal generator still set at 9.5 Mc/s, adjust the band D RF amplifier core until the peak meter reading is indicated.

( ) The coils and trimmers will interact and the preceding steps should be repeated until the peak output occurs on the two alignment points.

This completes band D alignment.

BAND E ALIGNMENT - Local OSC. is on low side.

( ) Tune the signal generator to 30.0 Mc/s.

( ) Set the band switch to band E.

( ) Rotate the main tuning knob until the dial pointer indicates 30.0 Mc/s.

( ) Slowly tune the signal generator back and forth until the modulated alignment signal is heard. Checkthe frequency of this signal as indicated on the signal generator. Return the signal generator to 30.0 Mc/s. If the signal generator was lower in frequency than 30.0 Mc/s, rotate the band E oscillator trimmer screw anti-clockwise until the signal is heard and peaked on the meter. If the signal heard was higher in frequency than 30.0 Mc/s, rotate the band E oscillator trimmer screw clockwise until the signal is heard and peaked on the meter.

( ) Leave the receiver set at 30.0 Mc/s. Tune the signal generator to 29.09 Mc/s. A second signal should be audible; this is the image frequency. This signal should be down in magnitude when the receiver is correctly aligned. Tune the signal generator to 30.91 Mc/s. If the alignment signal is heard at this frequency, the oscillator is incorrectly set 455 Kc/s above the incoming signal. If this should occur, increase the trimmer capacity by turning the band E oscillator trimmer clockwise until the second signal is heard and peaked on the meter.

( ) With the receiver and signal generator set at 29.0 Mc/s, adjust the band E mixer trimmer until the peak meter reading is indicated.

( ) With the receiver and signal generator still set at 29.0 Mc/s, adjust the band E RF amplifier trimmer until the peak meter reading is indicated.

( ) Tune the receiver to 20.5 Mc/s.

( ) Set the signal generator to 20.5 Mc/s.

( ) Tune the signal generator back and forth until the modulated alignment signal is heard. Check the frequency of this signal as indicated on the signal generator. Return the signal generator to 20.5 Mc/s. If the signal heard was lower in frequency than 20.5 Mc/s, turn the band E oscillator core anti-clockwise until the signal peaks on the meter. If the signal heard was higher in frequency than 20.5 Mc/s, turn the band E oscillator core clockwise until the signal peaks on the meter.

( ) Leave the receiver set at 20.5 Mc/s. Tune the signal generator to 19.59 Mc/s. A second signal should be audible; this is the image frequency. This signal should be down in magnitude when the tuner assembly is correctly aligned. Tune the signal generator to 21.41 Mc/s. If the alignment signal is heard at this frequency, the oscillator is incorrectly set 455 Kc/s above the incoming signal. If this should occur, increase the oscillator core clockwise until the alignment signal is heard.

( ) With the receiver and signal generator set at 21.0 Mc/s, adjust the band E mixer core until the peak meter reading is indicated.

( ) With the receiver and the signal generator still set at 21.0 Mc/s, adjust the band E RF amplifier core until the peak meter reading is indicated.

( ) The coils and trimmers will interact and the preceding steps should be repeated until the peak output occurs on the two alignment points.

This completes alignment of the tuner assembly.

BFO ALIGNMENT

( ) Set the BFO control to its centre position (this turns the BFO on).

( ) Turn the adjustment core in the BFO coil until zero beat is produced with a properly centred incoming signal.

This completes the alignment of the receiver. Disconnect the signal generator and audio output meter. See Figure 17 on Page 40 and place the receiver in the cabinet. and secure with 2 4BA x $\frac{1}{4}$" screws. Install the aerial.

OPERATION

VOLUME: Advancing the control marked VOLUME from anti-clockwise position turns the power on and controls the audio output of the receiver.

RF GAIN: Controls the sensitivity of the RF amplifier. In general this control should be fully clockwise. However, by backing off the control, blocking of the receiver by extremely strong signals can be prevented.

BAND SWITCH: Changes bands as indicated on the front panel.

ANT.TUNING: This control peaks the RF amplifier and should be readjusted for each band.

ANL: The ANL switch provides audio clipping of high noise pulses to provide reduced noise in the audio output.

AVC: The AVC switch serves a dual purpose of switching off the S-meter and removing AVC from the RF amplifier and 1st IF stage. With the AVC OFF, the RF gain control provides excellent control over receiver sensitivity.

BFO: The BFO control turns on and adjusts the frequency of an oscillator whose centre frequency is 455 Kc/s. This signal is injected into the emitter of the 2nd IF amplifier. This produces an audible beat note in the speaker, allowing reception of CW, SSB, and tele-type signals.

PHONE JACK: This jack provides a convenient method of connecting a set of earphones. The speaker is automatically cut out when an earphone jack is inserted in the receptacle. Although the earphone output impedance is approximately 25Ω, headsets of nearly any impedance should prove satisfactory.

MAIN TUNING: The MAIN TUNING knob is used to tune the five bands on the top half of the dial. The main tuning is calibrated accurately only when the bandspread tuning knob is fully clockwise.

BANDSPREAD: BANDSPREAD is used to tune the calibrated ham bands or to be used with the logging scale on the bottom half of the dial. With the bandspread tuning knob set fully clockwise, set the main tuning pointer over the point indicated by the circle on the main dial containing the wavelength number (80 M, 40 M, 10 M, etc.), corresponding to the bandspread dial desired. Now, tuning the receiver with the bandspread tuning knob gives an expanded frequency scale for the amateur frequency band being used.

Using the logging scale, it is possible to return to any particular frequency within the tuning range of the receiver by noting the main tuning point and the logging scale reading.

EARTH: Whenever possible, it is recommended that an earth wire be connected to the Black earth socket at the rear. This will improve reception of signals regardless of the aerial utilized.

TUNING AM SIGNALS

The receiver controls should be set as follows:

VOLUME	ON one-half turn (clockwise).
BFO	OFF (anti-clockwise).
BAND SWITCH	Desired band.
RF GAIN	Full (clockwise).
ANT. TUNING	Peaked after tuning in signal.
ANL.	OFF (unless excess noise is present).
AVC	ON (unless copying a weak signal).

Tune signal to peak reading on S-meter, adjust VOLUME control for desired output level. Peak the aerial tuning. If signal is extremely strong, turn the RF GAIN control anti-clockwise to reduce possible distortion.

TUNING SSB OR CW SIGNALS

The receiver controls should be set as follows:

VOLUME	ON- nearly fully clockwise.
BFO	ON. Set with the pointer to the left index mark for lower sideband and to the right for upper sideband.
BAND SWITCH	Desired band.
RF GAIN	Reduce (anti-clockwise) to eliminate RF amplifier gain after tunning in CW or SSB signal.
ANT. TUNING	Peaked after tuning in signal.
ANL.	OFF (unless excessive noise is present)
AVC.	OFF

Tune in the signal, turn the VOLUME control full ON and control the audio output with the RF GAIN control. A slight amount of readjustment of the BFO will probably be required to accurately tune a SSB station to the desired pitch.

FIXED STATION RECEIVER

When using this receiver with a transmitter, the muting terminals on the rear of the chassis should be used. These terminals are in the +12 volt supply lead and protect the receiver from overload and possible damage when being used in close proximity to a transmitter.

Using an external switch or a relay, the terminals 1 and 2 of the muting terminal should be open (disconnected) during the transmit period and closed (connected) during the receive period. The jumper wire used in normal operation must be removed for this type of operation.

WARNING

In using this receiver in close proximity to a transmitter, i.e., as the station receiver, it is desirable to short the antenna terminal to the ground terminal during transmit conditions. Excessive signal in the "front-end" of the receiver may cause failure of the RF amplifier transistor.

IN CASE OF DIFFICULTY

If upon completion of your receiver, you find that it does not function properly, observe the following; presented in approximately their order of probability.

SOLDERING: From past experience, it is found that a large percentage of those kits that require service after completion are wired correctly but have poor or unsoldered connections. It is suggested that all soldered points be checked, and that you reheat any connections that look doubtful. This is particularly important where transistors are employed as they are inherently low impedance devices and cold solder joints can cause considerable difficulty.

Examine all connections carefully for excessive solder or loose bits of solder and wire clippings that may be causing short circuit between adjacent terminals. If necessary, carefully bend the terminals away from each other to avoid possibility of any short circuit.

Recheck the soldering of the printed circuit board connections. Make certain all points are soldered and that no conductors are bridged by "blobs" of solder or wire clippings. Check for loose terminal pins.

CIRCUIT WIRING: Recheck the wiring. Trace each lead in coloured pencil on the pictorials as wiring is followed in the receiver (or the circuit daigram if you are a more experienced builder). Many cases of difficulty result from wrong connections; having a friend check the wiring will often reveal a mistake consistently over-looked. Check the values of components used, in particular, those on the printed circuit board - colour coding of resistors, polarity of diodes and electrolytic capacitors, and physical positioning of the IF transformers having symmetrical terminal configurations. The circuit board should be checked against Figures 2 and 3 in a step-by-step fashion. As an example of a common error, a 470Ω resistor is easily confused with a 4.7Ω resistor if one fails to note the difference in the third (Brown or Gold) identifying band. There are many other frequently confused similarities.

BATTERY POLARITY: If a reliable DC voltmeter is available, turn the set on and check that the voltage at the negative battery terminal is approximately 12 volts negative with respect to chassis. If a reverse polarity exists, components may have been damaged.

In the absence of a meter, make certain that the batteries are installed in the same direction, as shown in Figure 14.

Under normal operation, the receiver should continue to function properly as batteries discharge - down to approximately nine volts. For broadcast band performance, the receiver will operate at the six volt level with some loss in audio volume. At the higher frequencies, low battery voltage may result in considerable local oscillator instability due to loss of zener voltage regulator action. A convenient check of relative battery correction is to tune in a station on band D or E and slide the DIAL LIGHT switch on. A severe change in tuning indicates weak batteries.

CIRCUIT VOLTAGES: Compare voltages at each transistor with those indicated on the Circuit Diagram and the chart on Page 51. Note the conditions under which the measurements were made. The regulated voltage at the zener diode should be 8 volts ± 10% and many other voltages, particularly those in the "front end", are dependent upon this nominal 8 volt centre value. If the zener voltage is, for example, high other voltages may very well be high by the same percentage. All measurements should be made with a vacuum tube voltmeter such as the HEATHKIT V-7A or its equivalent. All voltages are negative with respect to chassis ground. Large discrepancies, particuarly in collector voltages, indicate improper wiring or a defective component.

If any short circuits or wiring errors exist, the batteries may have become discharged. If this is the case, substitute new batteries after correcting the difficulty.

LOW BATTERY VOLTAGE: The voltage of a new pair of batteries under normal receiver load should be approximately 12 volts. Assuming the batteries are wired correctly, considerably less voltage than this indicates either poor batteries or excessive receiver current drain due to a circuit fault. If a milliammeter is available, temporarily remove the jumper at the EXTERNAL MUTING terminals and connect the meter across these terminals. The current drawn by the receiver (without dial lamp load) should not appreciably exceed 20 - 25 mA.

TEST CONDITIONS:

SUPPLY VOLTAGE: . .	12.0 volts
VOLUME CONTROL: . .	Switch ON, but full anti-clockwise
BFO SWITCH:	OFF (in) - ON for X10 check only
BANDSWITCH:	"A" position
RF GAIN:	Full clockwise
MAIN TUNING:	Set at 1 mc ("10")
AVC:	ON
ANL:	OFF
NO ANTENNA:	No input signal

Transistor	Emitter	Base (negative volts DC)	Collector
X1	0.5	0.7	6.8
X2	0.8	0.7	8.0
X3	0.9	1.1	7.5
X4	0.45	0.65	5.3
X5	0.4	0.6	7.8
X6	1.4	1.6	9.1
X7	0.75	0.85	9.5
X8	5.7	5.8	12.0
X9	.01	0.14	5.7
X10	1.5V	0.9	7.5

Voltage at junction of zener diode and feed-through capacitor should be 8 volts $\pm$ 10%.

The following are more specific cases of possible difficulty, assuming the builder has had some degree of success in getting the receiver to operate properly.

POOR SENSITIVITY: The most frequent cause of weak reception is poor alignment. If this is not the case and, assuming there is ample undistorted volume (i.e., the audio circuitry is working properly), the more probable causes follow:

First, determine whether the receiver lacks sensitivity on all bands.

With audio and RF GAIN controls fully advanced, the receiver should have a moderate hiss level, providing the mixer stage and all circuitry beyond entire printed board is working properly. If the oscillator section is working, removal of X3 will cause a considerable drop in hiss level; removal of X2 will cause the receiver to go "dead" if the BFO is off.

High apparent sensitivity with poor signal-to-noise ratio would indicate difficulties in the RF stage (X1 and circuitry) or in the input circuitry to mixer stage X2. Refer to Detail 3 on Page 8 and Figure 18 on page 41.

With the AVC switch in the "ON" position the following tests will indicate if the first IF amplifier (X4) and the RF/IF gain control system is working properly.

Rotating the R. F. GAIN control from fully clockwise to fully anti-clockwise should cause the meter pointer to read from "0" to "10".

If the meter pointer is out of mechanical "Zero" it may be adjusted by moving the brass tab at the rear of the meter.

TRANSISTOR INTERCHANGEABILITY: Many types of germanium transistors are constructed identically but sorted for particular characteristics. This means that, providing their leads are properly connected, they may often be interchanged with other types without appreciable change in performance.

AUTOMATIC NOISE LIMITER: Should the ANL circuit fail to operate, the probable cause is the polarity of the diode (or a defective diode) immediately adjacent to transistor socket X6.

SLIGHT AUDIO DISTORTION: This can be the result of improper values of components on the circuit board or a pair of OC81 transistors that are not "matched". The OC81 transistors bear a colour dot on the side of their enclosure. This represents the collector lead and must be connected to pin C on the circuit board.

SEVERE AUDIO DISTORTION: A frequent cause is the interchanging of the driver transformer leads, i.e. blue and brown or green and orange.

If a defective component is discovered or if trouble persists, refer to the REPLACEMENT or SERVICE sections of this manual.

INTRODUCTION TO TRANSISTORS

Transistors have been one of the most important developments in the field of electronics. Although they have been available commercially for only a few years, they have already found application in every branch of the art. They can assume the duties of thermionic valves in many applications, and in such capacity they are employed in the "Mohican" Model GC-1U Receiver.

Transistors possess many advantages over valves. Probably the one most apparent is their extremely small size, making possible the miniaturization of equipment in which they are used. The "Mohican" Model GC-1U Receiver does not take full advantage of this fact, however, because of several reasons. First, the average kit constructor probably does not have the necessary facilities or experience to construct in confined spaces. Second, miniaturization of all the components would only result in increased cost with no increase, and likely only a decrease, in the performance and economy of operation. Other advantages, however, make the use of transistors desirable as will be explained in the following paragraph.

Because of their small size, transistors possess very little mass or inertia. As a result they are not subject to the shock, vibration and microphonic faults of valves. Transistors do not contain a heater or filament, require no warm-up and consume no power which contributes nothing to useful audio output. Because no heat is generated within the cabinet, longer life can be expected from other components subject to deterioration from heat. Transistors operate on very low potential or voltage, measured in volts rather than tens or hundreds of volts as with valves. This makes battery operation very feasible and eliminates completely the shock hazard found in most valve equipment. Transistors have an extremely long life expectancy. Average life of transistors has not yet been definitely established simply due to lack of time to arrive at representative figures. Transistors have been in continuous operation for years without failure. Most failures are caused by improper use rather than by deficiencies in the basic design. As with any good thing, there are also limitations to the capabilities of transistors. Primarily these limitations involve power handling capabilities, high frequency limitations and extreme temperature limitations. None of these limitations are approached in their application in the GC-1U Receiver. One precaution must be observed, however. The batteries must be installed exactly as instructed or damage to the transistors may result. Also it is a good practice never to remove or insert a transistor with the receiver turned ON.

It might be of interest to note here some of the production problems connected with the making of a transistor. The germanium must first be refined to an extremely high degree of purity. The rigid requirements would compare to allowing no more than one kernel of corn in several carloads of wheat. The pure germanium is then "doped" with precisely controlled amounts of other elements to obtain the proper alloy necessary for transistor action. More will be said about the doping process later. The centre layer or "meat" of the sandwich may be only 1/1000 inch

thick. This layer must be precisely located, and a wire attached. The entire process must be performed under "operating-room" clean conditions. Any contamination of the transistor may be cause for failure. The assembly is then hermetically sealed in a protective case, often with an inert compound to assist in conducting heat away from the assembly. The drawing shows a typical transistor assembly.

As mentioned before, the germanium must be doped to obtain the characteristics needed for transistor action. Different materials are used to produce a "P" or an "N" type germanium. "P" type germanium means that the pure metal has been modified so that there is an electron deficiency in the natural crystal structure, often referred to as a "hole". "N" type germanium means that an electron excess is created in the natural germanium crystal. Transistors are produced in both NPN and PNP configurations, the letters indicating the type of germanium in each of the layers.

The middle layer of the sandwich is called the base. One outside layer is called the emitter and the other the collector. The junctions formed between the emitter and base and between the collector and base have a characteristic similar to that of a diode rectifier, in that the junction will conduct current much more readily in one direction than the other. When voltage is applied across a junction with positive voltage applied to the "P" type region and negative voltage to the "N" type region, a current consisting of two components will flow. Electrons will flow from the "N" region across the junction to the "P" region. If the polarity of the applied voltage is reversed, the electrons and holes move away from the junction and for practical purposes, no current will flow. The drawings illustrate this effect.

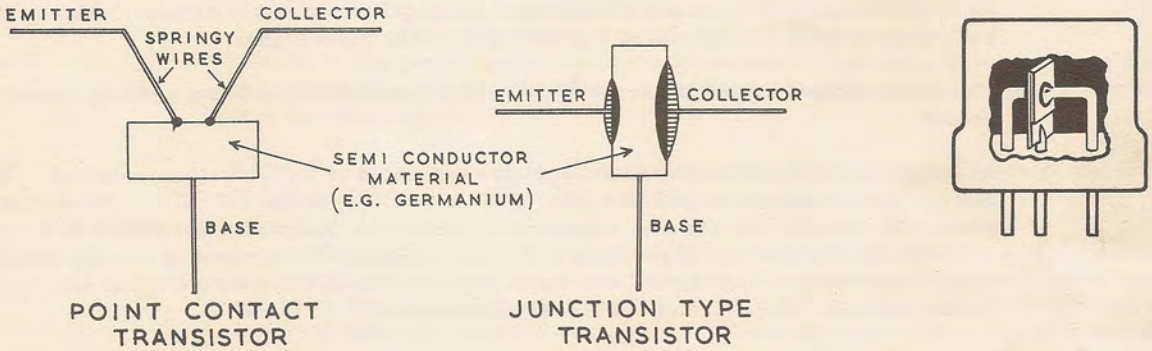

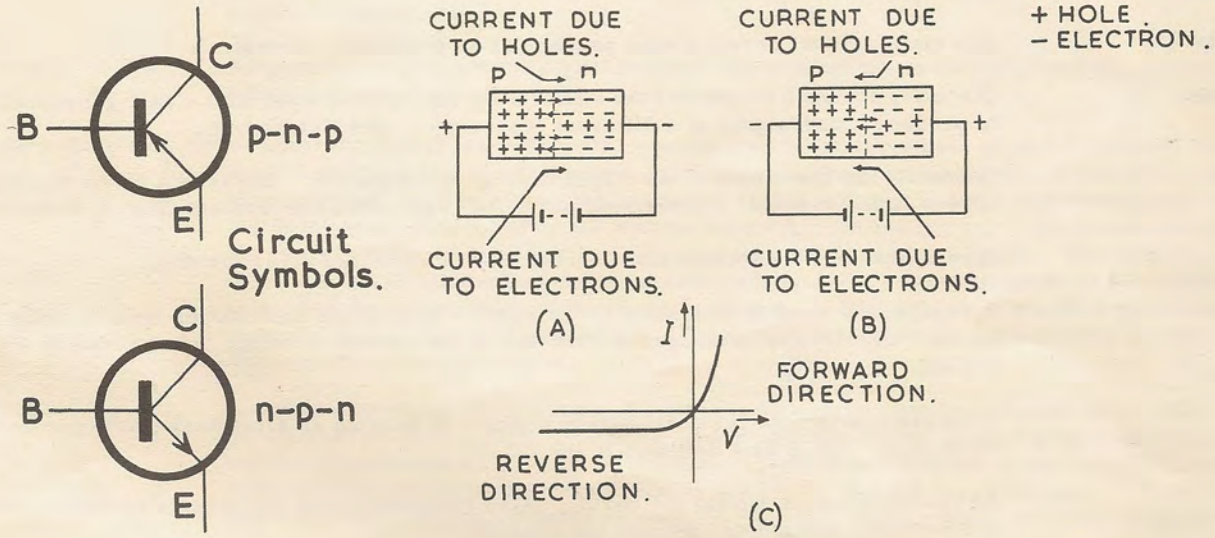

DETAIL-17.

GLOSSARY OF RADIO TERMS

While by no means complete, this glossary should assist those who are not familiar with radio terminology. The definitions apply to all radios in general but in many cases refer to the GC-1U Receiver specifically. Further information may be obtained from texts available at most public libraries.

Aerial — A system of conductors used to radiate or intercept radio signals.

AC — Alternating Current. An electrical current that reverses its direction of flow at regular intervals. House current makes 100 reversals every second. Two reversals are necessary to complete one cycle, hence 50 cycles. Much higher frequencies appear in radio circuitry, up to many millions of cycles per second.

AF — Audio Frequency. Those frequencies that fall within the range of the human ear, approximately 20 to 20,000 cycles per second. Remember that the ear can only hear mechanical vibrations in the air, not electrical currents.

AVC — Automatic Volume Control. Circuitry employed in a receiver to adjust the gain in opposite proportion to the strength of the received signal. Used to reduce the effects of faded signals, or "blasting" when tuning from a weak to a strong signal.

Amplifier — A circuit designed to increase the strength or amplitude of weak signals. Ideally the output signal is an exact magnified reproduction of the input signal.

Ampere — The unit of measurement of current flow. The number of electrons passing a point in one second.

Capacitor — A component constituting of conducting plates separated by an insulating material. Various materials and constructions are used in the capacitors in the GC-1U. Deposited silver plates on ceramic for the disc capacitors, aluminium foil plates separated by a chemical oxide for the electrolytic capacitors and sheet aluminium separated by air for the variable tuning capacitor. Capacitors are used to pass AC while blocking DC and also to tune or "resonate" electrical circuits to a desired frequency.

Coil — A component consisting of wire or some other conductor wound in turns on a suitable former. The number of turns and the size, shape, and material used for the former are determined by the application. Coils are often used with capacitors to form "tuned" circuits.

Condenser — See Capacitor.

Conductor — Any material that permits easy passage of an electrical current.

Converter — Circuitry designed to combine the signal from the radio station with a self-generated signal to produce a new signal at a different frequency. See Heterodyne.

Current — Generally the movement of electrons through a conductor. In vacuum tubes electron flow occurs in the vacuum. Movement of "holes" can constitute current flow in transistors.

DC — Direct Current. An electrical current that flows in one direction only.

Detector — A component used to extract the intelligence or desired information from a radio signal. In the GC-1U this intelligence consists of the speech or music transmitted by the radio station.

Diode — A two element or two terminal device capable of passing an electrical current in one direction only. Used as a detector in the GC-1U

Earth — An electrical connection to the earth. Also reference point for signals operating voltages in electronic equipment, usually the chassis.

Frequency — Repetition rate of an alternating current or of the vibration of the loudspeaker cone. Measured in cycles per second.

Heterodyne	The result of combining signals of different frequencies in order to obtain a signal of new frequency. Either the sum or the difference frequency of the two is generally the desired resulting frequency. Also known as "beat".
IF	Intermediate Frequency. The heterodyne or beat frequency produced by the converter in a superheterodyne receiver. Most of the amplification and selectivity of the radio signals is accomplished at this frequency. An IF of 455 Kc/s is employed by the GC-1U.
Inductance	The property of a coil to oppose any change in the magnitude of an electrical current flowing in it.
Insulator	Any material that does not permit easy passage of an electrical current.
Kc/s.	Kilocycle - 1,000 cycles.
Mc/s.	Megacycle - 1,000,000 cycles, 1,000 kilocycles.
Megohm	1,000,000 ohms.
Microfarad	μfd. A unit of capacity. Refers to the electrical "size" of a capacitor.
Ohm	Ω. The unit of electrical resistance.
Oscillator	Circuitry designed to generate AC at some desired frequency when operated from a DC source. Usually some circuit element or elements are adjustable so that a desired frequency may be obtained.
RF	Radio Frequency. Those frequencies employed for transmission of radio signals, from 10 kilocycles to 100,000 megacycles by government regulation.
Resistor	A component designed to oppose the flow of current. The dgree of opposition or resistance is measured in units called "ohms". Resistors are used to reduce current or voltage to a desired value, to provide isolation between circuits or to provide a load across which a useful signal may be developed. Resistors used in the GC-1U are made of a carbon compound housed in an insulating protective sleeve. Wire leads sealed in each end provide electrical connection to the resistance material.
Selectivity	The ability of a receiver to separate radio stations operating on adjacent channels. In the broadcast band these channels are assigned at 10 kilocycle intervals, i.e. 950 Kc/s, 960 Kc/s, 970 Kc/s, etc.
Sensitivity	A figure that expresses the signal strength required at the receiver aerial to produce a specified amount of sound from the loudspeaker.
Superheterodyne	A radio circuit that heterodynes or converts an incoming signal of any frequency in its tuning range to a signal of constant frequency before amplification and detection. This is accomplished by combining the incoming signal with one from a self-contained oscillator that is automatically tuned by the station selector. In the GC-1U, the oscillator signal is always 455 kilocycles higher in frequency than the incoming signal. The resultant signal therefore is 455 kilocycles, the intermediate frequency. Amplification of the radio signals may then be accomplished at a fixed frequency. This makes it possible to design maximum efficiency into the IF amplifiers. Improved selectivity and sensitivity are advantages of a superheterodyne circuit.
Transformer	A component designed to couple AC signals or energy from one circuit to another. Construction can vary widely depending on the application but generally consists of insulated coils of wire wound on a common former. The former may be of sheet iron for power or audio transformers, or powdered iron or air for IF and RF transformers. Transformers are employed for one or more of several reasons; they provide coupling of signals while isolating the DC operating voltages of the coupled circuits: they are capable of producing AC voltage "step-up" or "step-down"; they may be tuned to provide selective coupling of signals as the case of the IF transformers used in the GC-1U; they provide proper impedance matching between coupled circuits.

REPLACEMENTS

Material supplied with Heathkits has been carefully selected to meet design requirements and ordinarily will fulfill its function without difficulty. Occasionally, however, improper instrument operation can be traced to a faulty valve or component. Should inspection reveal the necessity for replacement, write to Daystrom Ltd. and please supply all of the following information:-

A. Thoroughly identify the part in question by using the part number and description found in the Manual parts list.
B. Identify the type and model number of the kit in which it is used.
C. Quote our invoice number (this is very important if delay is to be avoided) and date of supply, using the claim slip provided with each kit.
D. Describe the nature of defect or reason for requesting replacement.

Daystrom Ltd. will promptly supply the necessary replacements. Please do not return the original component until specifically requested to do so. Do not dismantle the component in question as this will void the guarantee. If valves are to be returned, pack them carefully to prevent breakage in shipment, as broken valves are not eligible for replacement. This replacement policy does not cover the free replacement of parts that may have been broken or damaged through carelessness on the part of the kit-builder.

SERVICE

If the completed instrument should fail to function properly and attempts to find and cure the trouble prove ineffective, the facilities of Daystrom's Service Dept. are at your disposal. Your instrument may be returned carriage paid to Daystrom Ltd., Gloucester, and the Company will advise you of the service charge where not covered within the terms of the guarantee (i. e. a faulty component supplied by us). THIS SERVICE POLICY APPLIES ONLY TO COMPLETED INSTRUMENTS CONSTRUCTED IN ACCORDANCE WITH THE INSTRUCTIONS AS STATED IN THIS MANUAL. Instruments that are modified in design will not be accepted for repair. Instruments showing evidence of acid core solder or paste fluxes will be returned not repaired.

Daystrom Ltd. is willing to offer its full co-operation to assist you in obtaining the specified performance level of your instrument. Factory repair service is available or you may contact the Engineering Consultation Department by mail. For information regarding possible modification of existing kits, it is suggested that you refer to any one or more of the many publications that are available on all phases of electronics. Although Daystrom Ltd. sincerely welcomes all comments and suggestions, it would be impossible to design, test, evaluate and assume responsibility for proposed circuit and layout changes for specific purposes. Therefore, such modifications must be made at the discretion of the kit builder according to information which will be much more readily available from some local source.

SHIPPING INSTRUCTIONS

Before returning a unit for service, be sure that all parts are securely mounted.

ATTACH A LABEL TO THE INSTRUMENT GIVING NAME, ADDRESS AND TROUBLE EXPERIENCED.

Pack in a rugged container, preferably wood, using at least three inches of shredded newspaper, wood wool or plastic cushioning material on all sides. DO NOT DESPATCH IN THE ORIGINAL KIT CARTON AS THIS CARTON IS NOT CONSIDERED ADEQUATE FOR SAFE SHIPMENT OF THE COMPLETED INSTRUMENT. Note that a carrier cannot be held liable for damage in transit if packing, in HIS OPINION, is insufficient.

PRICES: All prices are subject to change without notice.

MODIFICATIONS TO SPECIFICATIONS: Daystrom Ltd. reserves the right to discontinue instruments and to change specifications at any time without incurring any obligation to incorporate new features in instruments previously sold.

* *

The Heathkit builder is again strongly urged to follow step-by-step the instructions given in this Manual to ensure successful results. Daystrom Ltd. assumes no responsibility for any damages or injuries sustained in the assembly or handling of any of the parts of this kit or the completed instrument.

GUARANTEE

Daystrom Limited guarantee subject to the following terms to repair or replace free of charge any defective parts of this Heathkit (with the exception of cathode ray tubes and valves referred to hereunder) which fail owing to faulty workmanship or material provided the defective parts are returned to Daystrom Limited within 12 months from date of purchase:-

1. This guarantee is given to and for the benefit of the original buyer only, and is and shall be in lieu of, and there is hereby expressly excluded, all other guarantees conditions or warranties, whether express or implied, statutory or otherwise, as to quality or fitness for any purpose of the equipment, and in no event shall Daystrom Limited be liable for any loss of anticipated profits, damages, consequential or otherwise, injury, loss of time or other losses whatsoever incurred or sustained by the buyer in connection with the purchase, assembly or operation of Heathkit models or components thereof.

2. No replacement will be made of parts damaged by the buyer in the course of handling, assembling, testing or operating Heathkit equipment.

3. The purchaser shall comply with the Replacements Procedure laid down in the relevant Heathkit Manual.

4. Daystrom Limited will not replace, repair or service instruments or parts thereof in which acid core solder or paste fluxes have been used and in such event this guarantee shall be completely void.

Note: The Cathode Ray Tubes and Valves forming part of the equipment are guaranteed by the respective manufacturers. It should be noted that their guarantee is given only in respect of faulty workmanship and/or material and does not cover misuse or consequential damage.

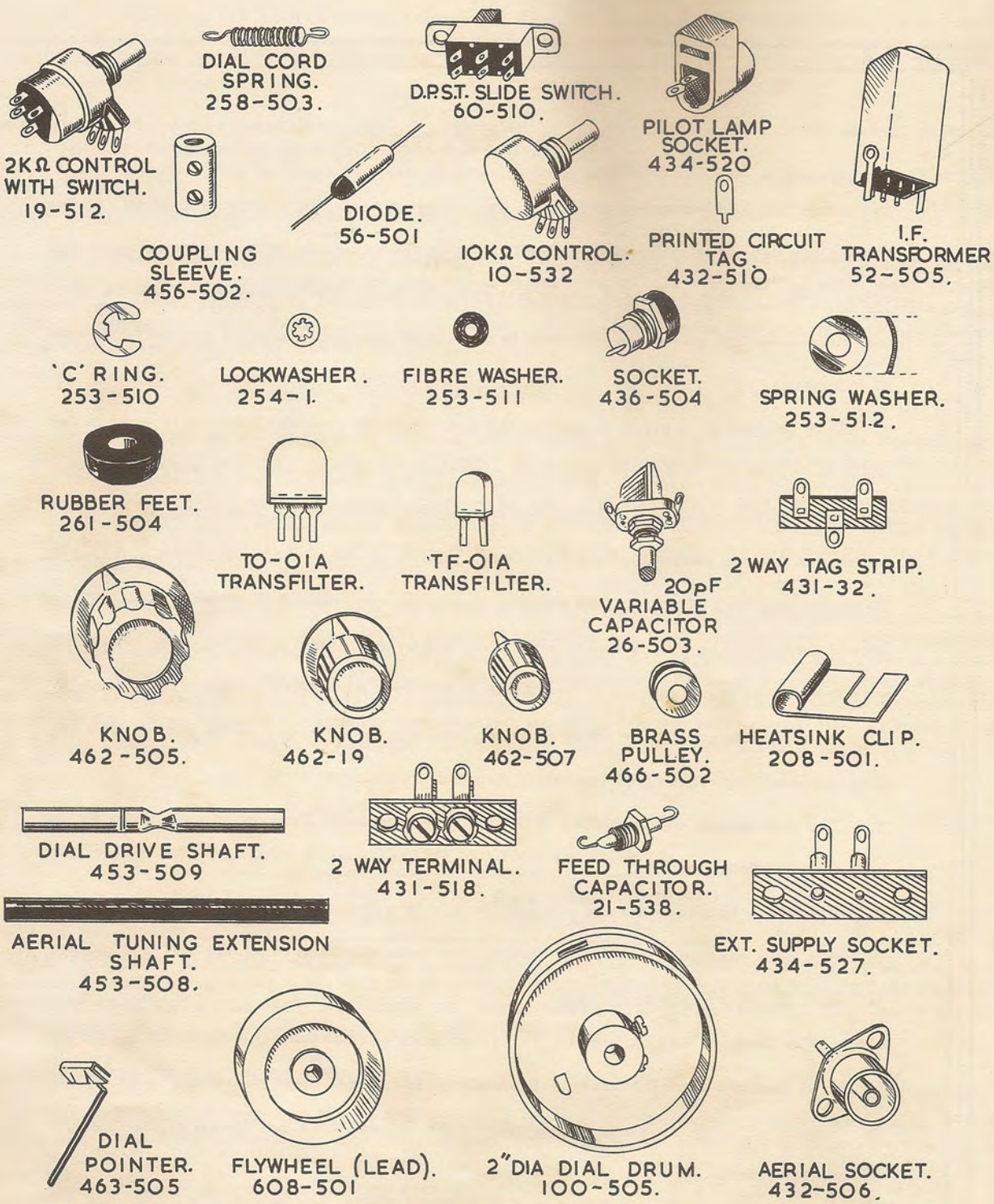
2KΩ CONTROL WITH SWITCH. 19-512.
DIAL CORD SPRING. 258-503.
D.P.S.T. SLIDE SWITCH. 60-510.
PILOT LAMP SOCKET. 434-520
COUPLING SLEEVE. 456-502.
DIODE. 56-501
10KΩ CONTROL. 10-532
PRINTED CIRCUIT TAG. 432-510
I.F. TRANSFORMER 52-505.
'C' RING. 253-510
LOCKWASHER. 254-1.
FIBRE WASHER. 253-511
SOCKET. 436-504
SPRING WASHER. 253-512.
RUBBER FEET. 261-504
TO-01A TRANSFILTER.
TF-01A TRANSFILTER.
20pF VARIABLE CAPACITOR 26-503.
2 WAY TAG STRIP. 431-32.
KNOB. 462-505.
KNOB. 462-19
KNOB. 462-507
BRASS PULLEY. 466-502
HEATSINK CLIP. 208-501.
DIAL DRIVE SHAFT. 453-509
2 WAY TERMINAL. 431-518.
FEED THROUGH CAPACITOR. 21-538.
AERIAL TUNING EXTENSION SHAFT. 453-508.
EXT. SUPPLY SOCKET. 434-527.
DIAL POINTER. 463-505
FLYWHEEL (LEAD). 608-501
2"DIA DIAL DRUM. 100-505.
AERIAL SOCKET. 432-506.

DETAIL-18.

PARTS LIST

PART No.	PARTS Per Kit	DESCRIPTION
Resistors Carbon		
2-510	2	4.7Ω ¼ watt 5% (High Stability)
H-120C10	1	12Ω (Brown Red Black)
Q-910C5	2	91Ω ¼ watt (White Brown Black)
H-101C10	3	100Ω ½ watt (Brown Black Brown)
H-151C10	1	150Ω ½ watt (Brown Green Brown)
H-471C10	2	470Ω ½ watt (Yellow Violet Brown)
H-561C10	2	560Ω ½ watt (Green Blue Brown)
H-102C10	3	1KΩ ½ watt (Brown Black Red)
H-152C10	1	1.5KΩ ½ watt (Brown Green Red)
H-182C10	1	1.8KΩ ½ watt (Brown Grey Red)
H-222C10	~~3~~ 4	2.2KΩ ½ watt (Red Red Red)
H-332C10	~~3~~ 1	3.3KΩ ½ watt (Orange Orange Red)
H-562C10	3	5.6KΩ ½ watt (Green Blue Red)
H-103C10	~~2~~ 3	10KΩ ½ watt (Brown Black Orange)
H-223C10	2	22KΩ ½ watt (Red Red Orange)
H-333C10	1	33KΩ ½ watt (Orange Orange Orange)
H-623C10	1	62KΩ ½ watt (Blue Red Orange)
H-104C10	1	100KΩ ½ watt (Brown Black Yellow)
H-154C10	1	150KΩ ½ watt (Brown Green Yellow)
Capacitors		
20-540	1	15pF Silver Mica
20-506	1	56pF Silver Mica 10%
20-501	1	200pF Silver Mica 5%
20-505	1	310pF Silver Mica 2%
20-548	1	390pF Silver Mica 5%
? 21-524	1	4.7pF tubular ceramic
21 538	1	.001μFd ceramic feed through
21-509	1	.001μFd (1000 pF) disc ceramic)
21-504	1	.01μFd (10K) tubular ceramic
21 531	~~4~~ 5	.05μFd disc ceramic (Green Black Orange)
21-532	1	.1μF disc ceramic (Brown Black Yellow)
21-540	1	.025μFd disc ceramic (Red Green Orange)
25-504	1	8μF 12v electrolytic
25-528	1	50μF 18v electrolytic
25-527	4	100μF 18v electrolytic
25-505	1	50μF 12v electrolytic
26-515	1	20pF variable (2 gang)
Coils - Transformers		
40-544	1	B.F.O. coil 455 Kc/s.
52-505	1	IF input transformer
52-506	1	IF output transformer
51-510	1	Audio driver transformer
45-506	1	Choke 1.1 mH
Sockets - Tagstrips - Knobs - Plugs - Connectors		
432-506	1	Aerial Socket
434-520	2	Pilot lamp socket
434-527	1	External Supply socket 2 pin
346-505	1	Phone Jack
462-505	2	1¾" Knob Grey
462-19	1	1¼" Knob Grey
462-507	4	5/8" Knob Grey
431-32	1	2 way tagstrip
431-518	1	2 way terminal strip
438-506	1	2 pin external supply plug
438-504	1	Aerial Plug
432-501	2	Battery connector (Pos)
432-502	2	Battery connector (Neg)
436-504	1	Socket (Red)
436-503	1	Socket (Black)
Hardware - Grommets - Feet		
73-501	4	3/8" rubber grommet
73-510	1	5/8" x 1-1/8" rubber grommet
207-504	2	3/16" cable clamp
250-501	30	6BA ¼" Binderhead screw
250-502	8	6BA x 5/16" Binderhead screw
250-513	10	4BA x ¼" Binderhead screw
250-517	1	4BA x ½" Binderhead screw
252-501	38	6BA Full nut
252-3U	11 ~~8~~ 7	4BA Full nut
252-514	4	2BA Half nut
~~252-518~~	~~10~~	~~6-32 Nut (American Thread)~~
254-501	32	6BA Lockwasher
254-1U	10	4BA Lockwasher
253-504	4	2BA Flatwasher
254-502	4	2BA Lockwasher
254-503	5	3/8" I.D. Lockwasher
253-510	2	'C' Ring
253-511	8	Fibre washer (4BA)
253-513	2	Spring washer ¼ I.D.
258-503	2	Dial Cord spring
261-504	4	Rubber Feet
250-533	2	4BA x 5/8" B'hd screws
205-512	4	2BA x ½" " "
Controls - Switches		
10-532	1	10KΩ Control (Log)
19-512	1	2KΩ Control (Lin) with switch
19-513	1	5KΩ Control (Log) with switch
60-504	2	S.P.S.T. slide switch (2 tag)
60-510	2	D.P.S.T. slide switch (6 tag)

PARTS LIST (cont'd)

PART No.	PARTS Per Kit	DESCRIPTION
Diodes - Meter Lamps - Transistors - Transfilter		
56-501	3	Crystal diode OA81 (or equiv.)
407-68	1	Meter O - 1mA, edge reading with clip
412-4	2	6.3v 110mA, Lamp
417-502	4	OC45 transistor (IF)
417-503	1	OC81D transistor (Driver)
417-504	2	OC81 transistor (Matched pair)(Output)
404-40	2	TO-O1A transfilter
404-41	2	TF-O1A transfilter
Wire - Solder - Screened Cable		
344-500	1 length	1/.029 Black
344-501	1 length	1/.029 Brown
344-502	1 length	1/.029 Red
344-503	1 length	1/.029 Orange
344-504	1 length	1/.029 Yellow
344-505	1 length	1/.029 Green
344-506	1 length	1/.029 Blue
344-507	1 length	1/.029 Violet
344-508	1 length	1/.029 Grey
344-509	1 length	1/.029 White
331-501	1 length	60/40 Solder 18 SWG
343-3	1 length	Screened cable
341-2	1 length	14/.0076 Red flexible
341-1	1 length	14/.0076 Black flexible
340-501	1 length	Bare wire 22 SWG
Sheet Metal Parts		
100-524	1	Chassis Base assembly
100-505	2	2" diameter dial drum
100-525	1	Dial back plate assembly
100-523	1	Front Panel assembly
204-537	2	Pilot Lamp Bracket
214-501	1	Battery Box
90-516	1	Cabinet
204-535	1	Heat sink bracket
259-505	2	6BA Solder tag
259-504	3	4BA Solder tag
Turned Parts		
453-508	1	Shaft $\frac{1}{4}$" dia. x $5\frac{3}{4}$" Black phenolic
453-509	2	Shaft $\frac{1}{4}$" x 3" dial drive
453-510	1	Shaft $\frac{1}{4}$" x 1-7/8" band switch extension
456-502	2	Coupling Sleeve
455-502	4	Bush $\frac{1}{4}$" bore $\frac{1}{4}$" threaded length
455-503	2	Bush $\frac{1}{4}$" bore 3/8" threaded length
255-504	2	3/8" Spacer
Miscellaneous		
85-515	1	Circuit Board for I.F. and A.F. Amplifier
346-1	1	Length 1 MM sleeving
349-501	1	Length dial cord
401-507	1	Speaker 7" x 4" 25Ω impedance
608-501	2	Fly wheel (lead)
463-505	2	Dial pointer
464-508	1	Plastic dial plate
142-502	1	Collapsible whip aerial
211-4	1	Handle
208-501	2	Transistor Heat sink clips
432-503	25	Transistor mounting spills
432-510	20	Printed Circuit tags
320-501	1	length Foam plastic strip (2" wide)
100-526	1	Coil Pack Assembly
595-537	1	Instruction Manual

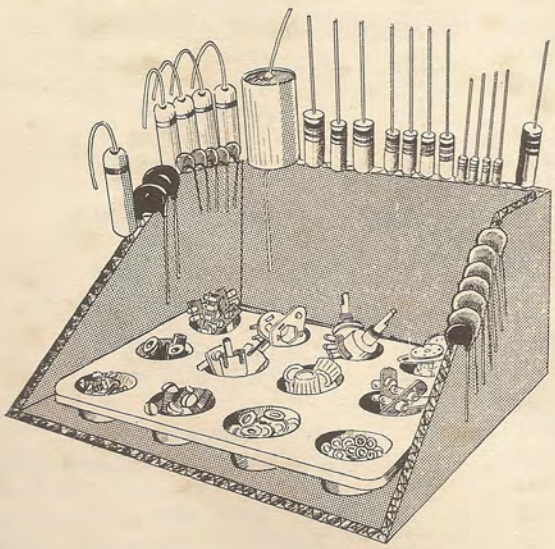

This illustration shows how resistors and capacitors may be placed in the cut edge of a corrugated cardboard carton until they are needed. Their values can be written on the cardboard next to each component.

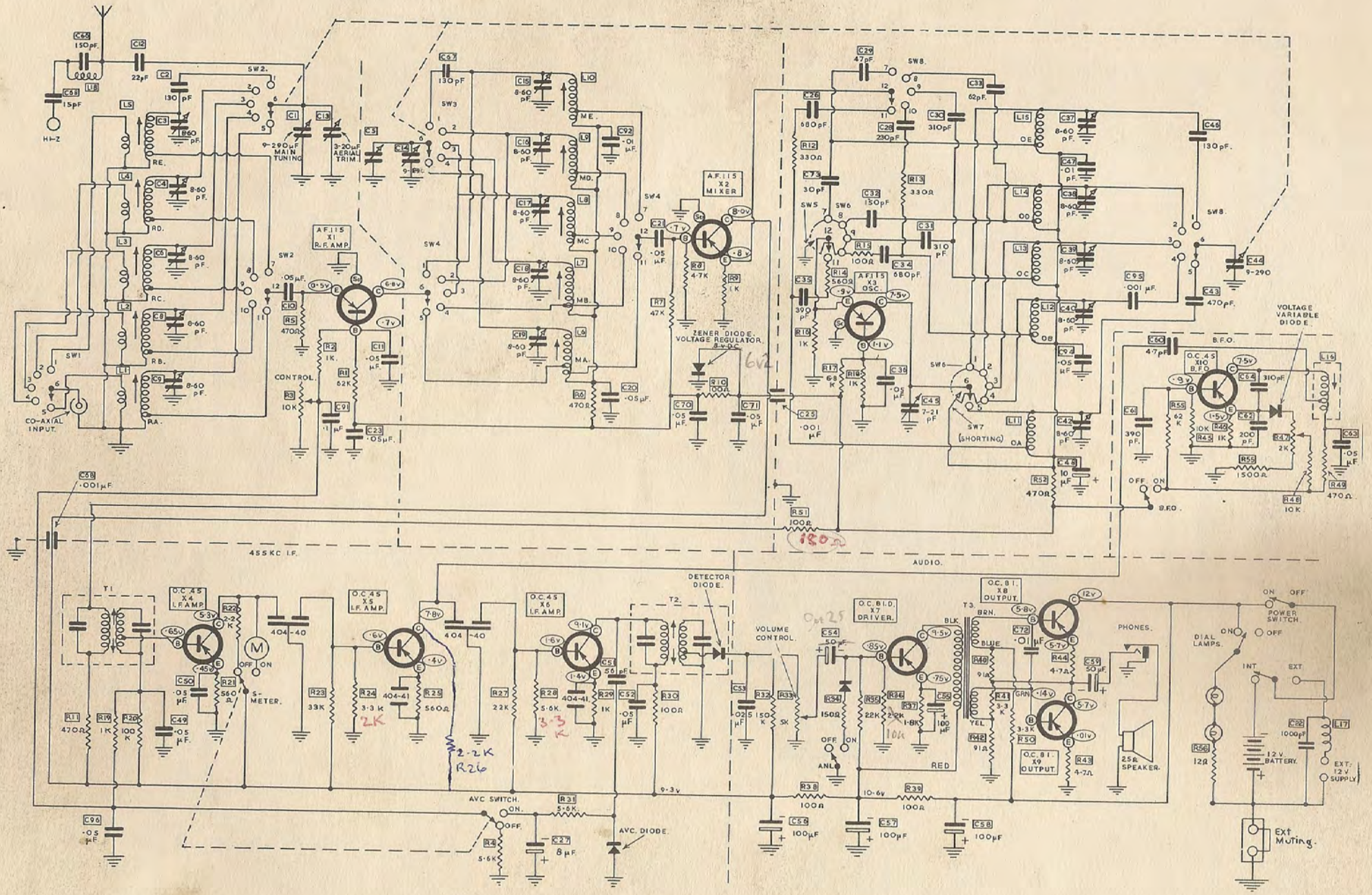

THE GC-1U CIRCUIT DIAGRAM.

HELPFUL KIT BUILDING INFORMATION

Before attempting actual kit construction read the construction manual thoroughly to familiarise yourself with the general procedure. Note the relative location of pictorial inserts in respect of the progress of the assembly procedure outlined.

This information is offered primarily for the convenience of the novice kit builders and will be of definite assistance to those lacking thorough knowledge of good construction practices. Even the advanced electronic enthusiast may benefit by a brief review of this material before proceeding with kit construction. In the majority of cases, failure to observe basic instruction fundamentals is responsible for inability to obtain desired level of performance.

RECOMMENDED TOOLS

The successful construction of Heathkits does not require the use of specialised equipment and only basic tools are required. A good quality electric soldering iron is essential. The preferred size would be a 25-50 watt iron with a small tip. The use of long nose pliers and a diagonal or side cutting pliers is recommended. A small screw driver will prove adequate and several additional assorted screw drivers will be helpful. Be sure to obtain a good supply of resin core type radio solder. Never use separate fluxes, paste or acid solder in electronic work.

ASSEMBLY

In the actual mechanical assembly of components to the chassis and panel, it is important that the procedure shown in the manual be carefully followed. Make sure that the valve holders are properly mounted in respect to keyway or pin numbering location. The same applies to transformer mountings so that the correct transformer colour coded wires will be available at the proper chassis opening. Make it a standard practice to use lockwashers under all 4BA and 2BA nuts. The only exception being in the use of soldering tags - the necessary locking feature is already incorporated in the design of the soldering tags. A control lock washer should always be used between the control and the chassis to prevent undesirable rotation in the panel. To improve instrument appearance and to prevent possible panel marring use a control flat nickel washer under each control nut.

When installing terminals that require the use of fibre insulating washers, it is good practice to slip the shouldered washer over the terminal stud before installing the mounting stud in the panel hole provided. Next, install a flat fibre washer and a soldering tag under the mounting nut. Be sure that the shouldered washer is properly centred in the panel to prevent possible shorting of the terminal.

WIRING

When following the wiring procedure make the leads as short and direct as possible. In filament wiring requiring the use of a twisted pair of wires allow sufficient slack in the wiring that will permit the twisted pair to be pushed against the chassis as closely as possible thereby affording relative isolation from adjacent parts and wiring.

When removing insulation from the end of connecting wire, it is seldom necessary to expose more than a quarter inch of the wire. Excessive insulation removal may cause a short circuit condition in respect of nearby wiring or terminals. In some instances, transformer leads of solid copper will have a brown baked enamel coating. After the transformer leads have been trimmed to a suitable length, it is necessary to scrape the enamel coating in order to expose the bright copper wire before making a terminal or soldered connection.

In mounting parts such as resistors or capacitors, trim off all excess lead lengths so that the parts may be installed in a direct point-to-point manner. When necessary use insulated sleeving over exposed wires that might short to nearby wiring. It is urgently recommended that the wiring and parts layout as shown in the construction manual be faithfully followed. In every instance the desirability of this arrangement was carefully determined following the construction of a series of laboratory models.

SOLDERING

Much of the performance of the kit instrument, particularly in respect of accuracy and stability, depend upon the degree of workmanship used in making soldered connections. Properly soldered connections are not at all difficult to make but it would be advisable to observe a few precautions. First of all before a connection is to be soldered, the connection itself should be clean and mechanically strong. Do not depend on solder alone to hold a connection together. The tip of the soldering iron should be bright, clean and free of excess solder. Use enough heat so that the solder flows thoroughly and smoothly into the joint. Avoid excessive use of solder and do not allow a flux flooding condition to occur which could conceivably cause a leakage path between adjacent terminals on switch assemblies and valve holders. This is particularly important in instruments such as the VVM, oscilloscope and generator kits. Excessive heat will also burn or damage the insulating material used in the manufacture of switch assemblies. Be sure to use only good quality resin core type solder.

AERIAL	CAPACITOR (VARIABLE)	SWITCH — SINGLE POLE (S.P.) SINGLE THROW (S.T.)	BATTERY +
LOOP	RESISTOR	SWITCH — DOUBLE POLE (D.P.) DOUBLE THROW (D.T.)	FUSE OR
DIPOLE	RESISTOR (TAPPED)	SWITCH — TRIPLE POLE (T.P.) DOUBLE THROW (D.T.)	CRYSTAL
EARTH	RESISTOR (VARIABLE)	LOUDSPEAKER	TERMINAL & TERMINAL STRIP
INDUCTOR (COIL OR R.F. CHOKE)	POTENTIOMETER	RECTIFIER	WIRING BETWEEN LIKE LETTERS IS UNDERSTOOD →X →Y XY XY
R.F. COIL WITH ADJUSTABLE IRON DUST CORE	JACK (TWO CONDUCTOR)	MICROPHONE	MICRO (X 1/1,000,000) = μ
L.F. CHOKE (IRON CORED) WITH TAPPINGS	JACK (THREE CONDUCTOR)	TYPICAL TUBE SYMBOL: ANODE, SUPPRESSOR GRID, SCREEN GRID, CONTROL GRID, CATHODE, HEATER FILAMENT	MILLI (X 1/1000) = m
R F TRANSFORMER (AIR CORE)	WIRES CONNECTED		KILO (X 1000) = K
TRANSFORMER (R.F. OR I.F.) ADJUSTABLE IRON DUST CORE	WIRES CROSSING BUT NOT CONNECTED	TRANSISTOR (P.N.P. TYPE)	MEGA (X 1,000,000) = M
TRANSFORMER (MAINS OR L.F.) IRON CORE	A-AMMETER V-VOLTMETER mA-MILLIAMMETER μA-MICROAMMETER ETC.	TRANSISTOR (N.P.N. TYPE)	OMEGA (OHMS) = Ω
CAPACITOR	NEON LAMP STABILISER VALVE	SOCKET OUTLET — CO AXIAL	MICROFARAD = μF
CAPACITOR (ELECTROLYTIC)	LAMP PILOT OR ILLUMINATING	TWO PIN SOCKET AND TWO PIN PLUG	PICOFARAD = pF MICRO-MICROFARAD = μμF

DAYSTROM LIMITED

A Member of the Daystrom Group

THE WORLDS LARGEST MANUFACTURERS
OF ELECTRONIC KITS

GLOUCESTER, ENGLAND

HC(P) 2870/761

Copyright
Daystrom Ltd.
Gloucester, England.

Printed in England