MODEL NRD-545

Circuit schema

Downloaded by
RadioManual.EU

5. BLOCK DIAGRAM

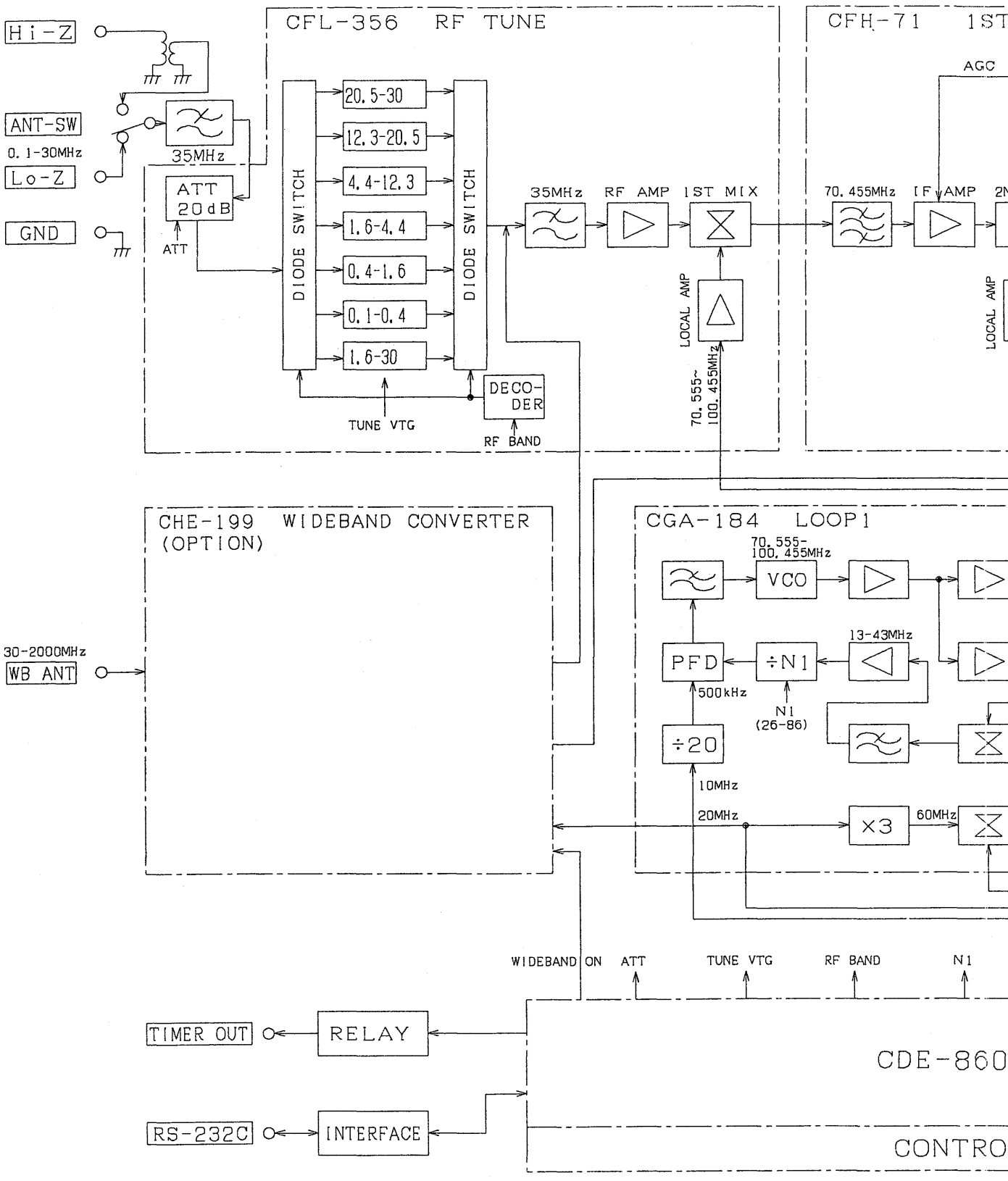

Downloaded by RadioManual.EU

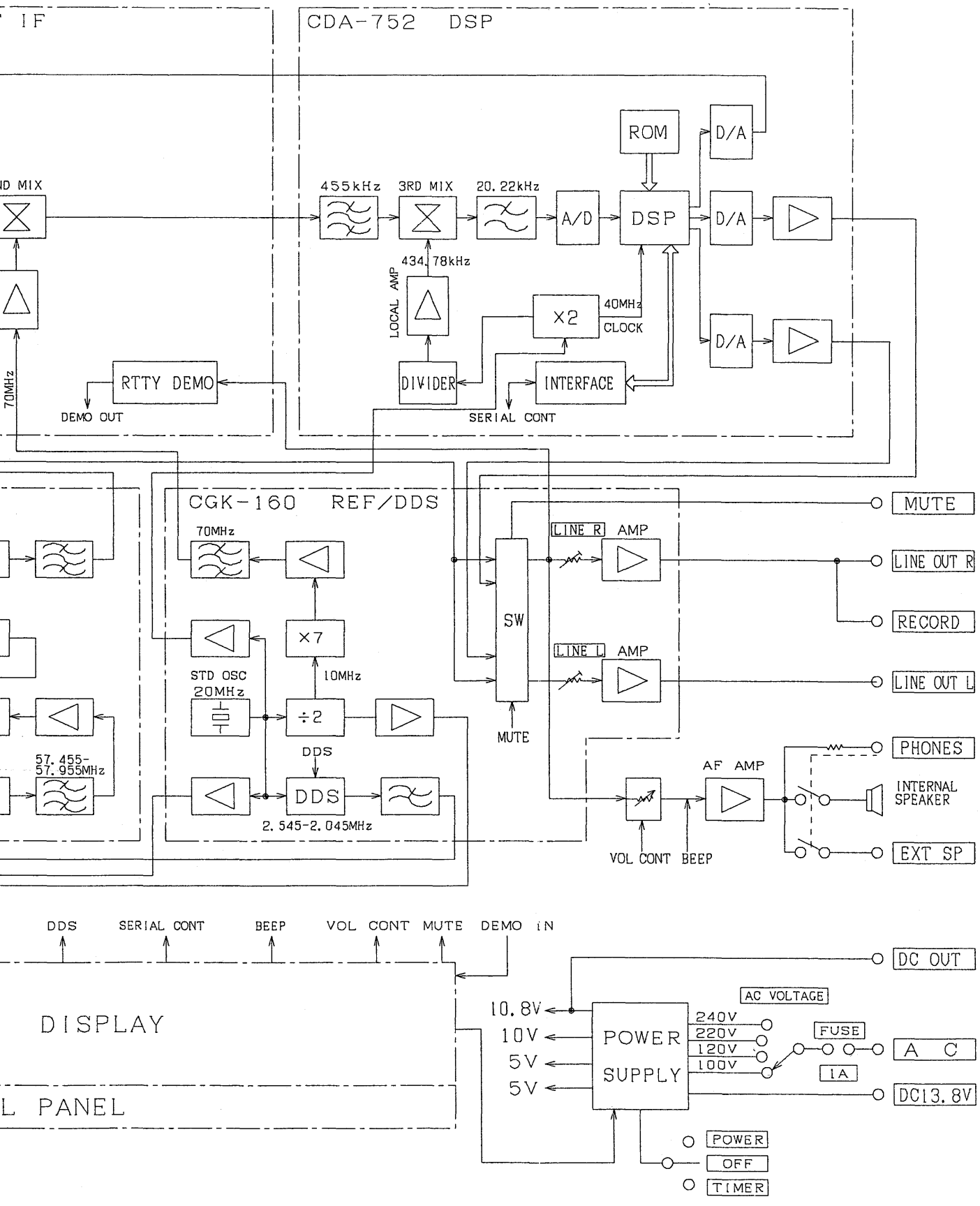

Downloaded by RadioManual.EU

CHE-199 Wideband Conv

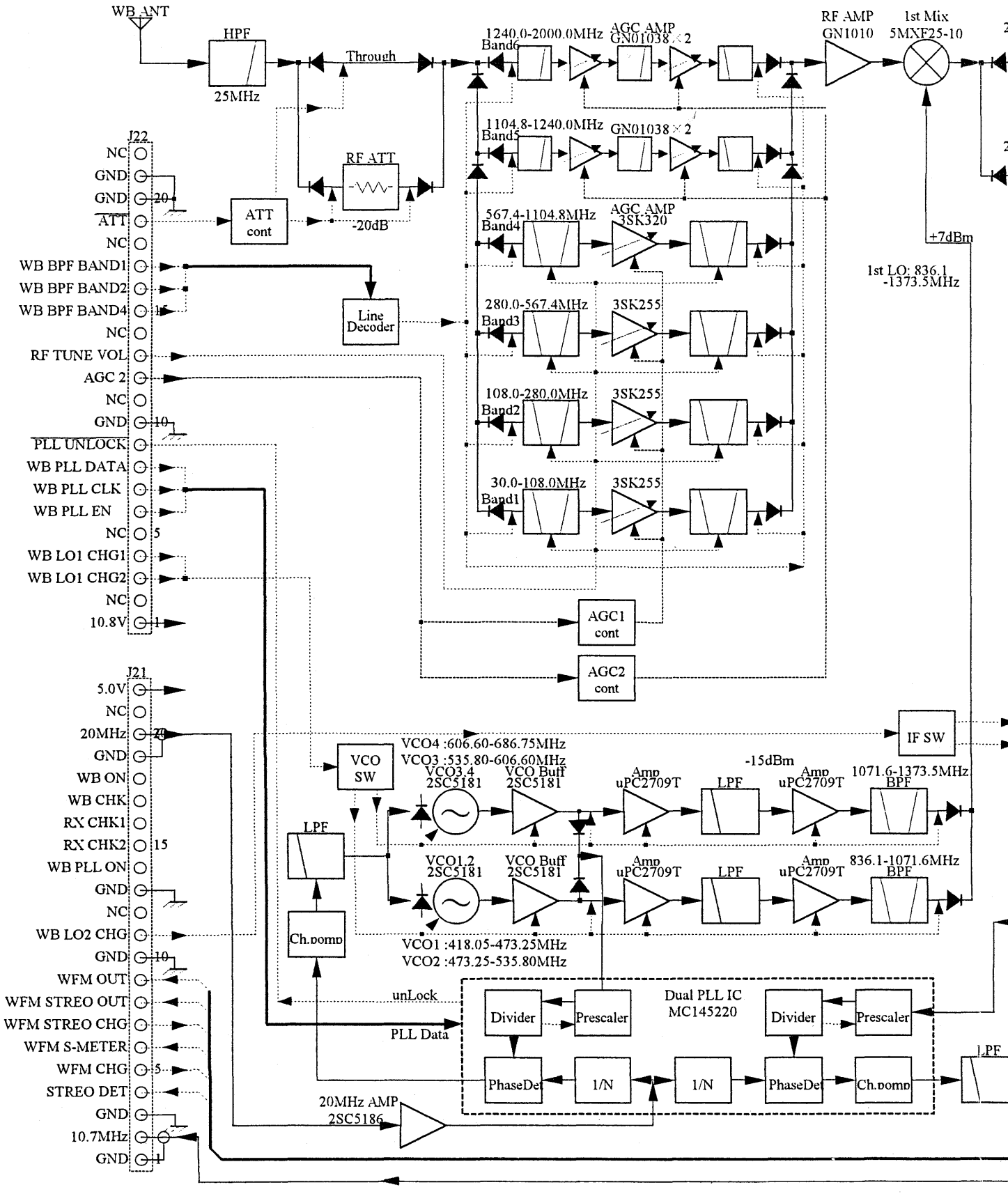

Downloaded by
RadioManual.EU

erter Unit Blockdiagram

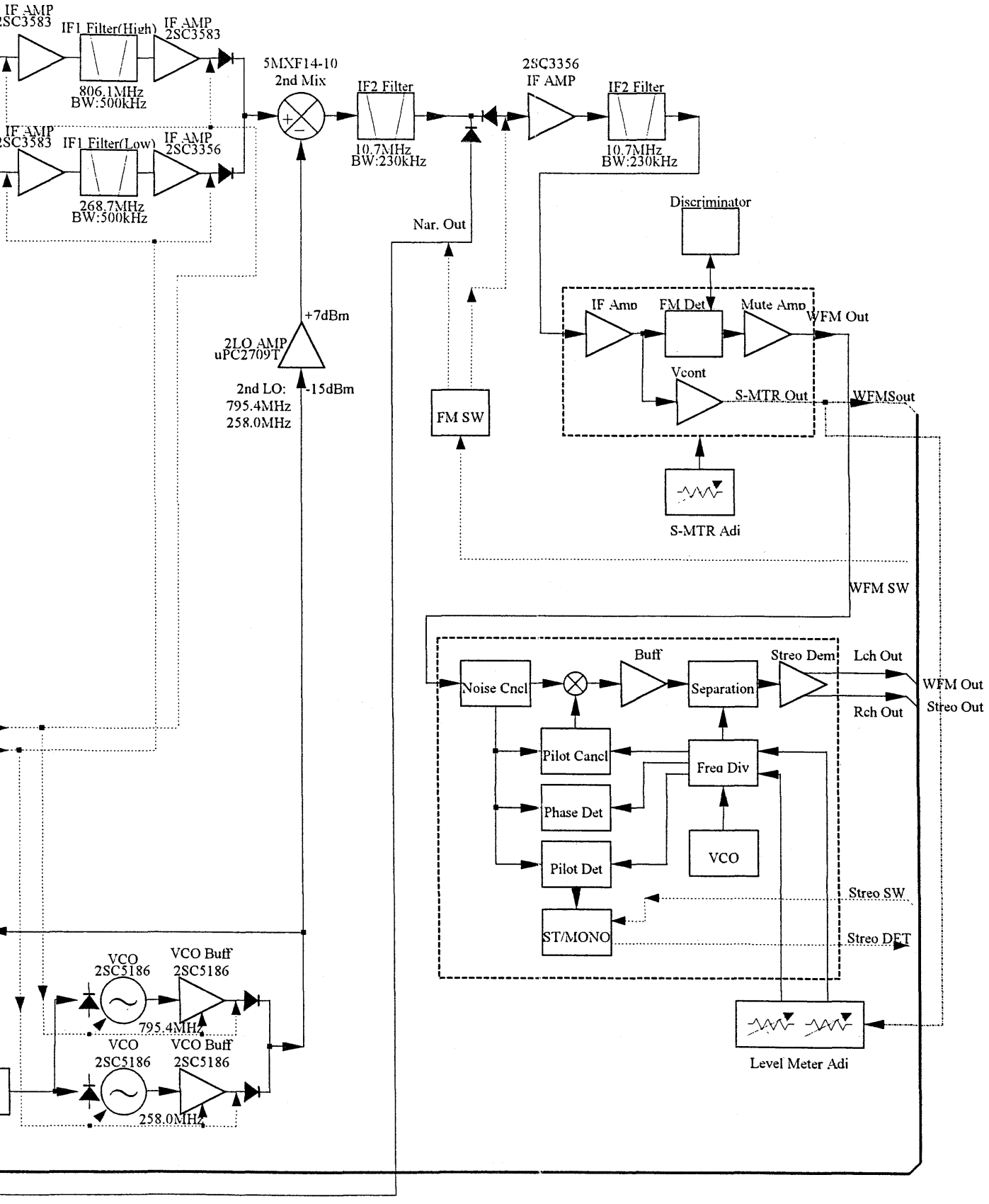

Downloaded by
RadioManual.EU

9. CIRCUIT DIAGRAM AND PCBLAYOUT

9-1 CIRCUIT DIAGRAM

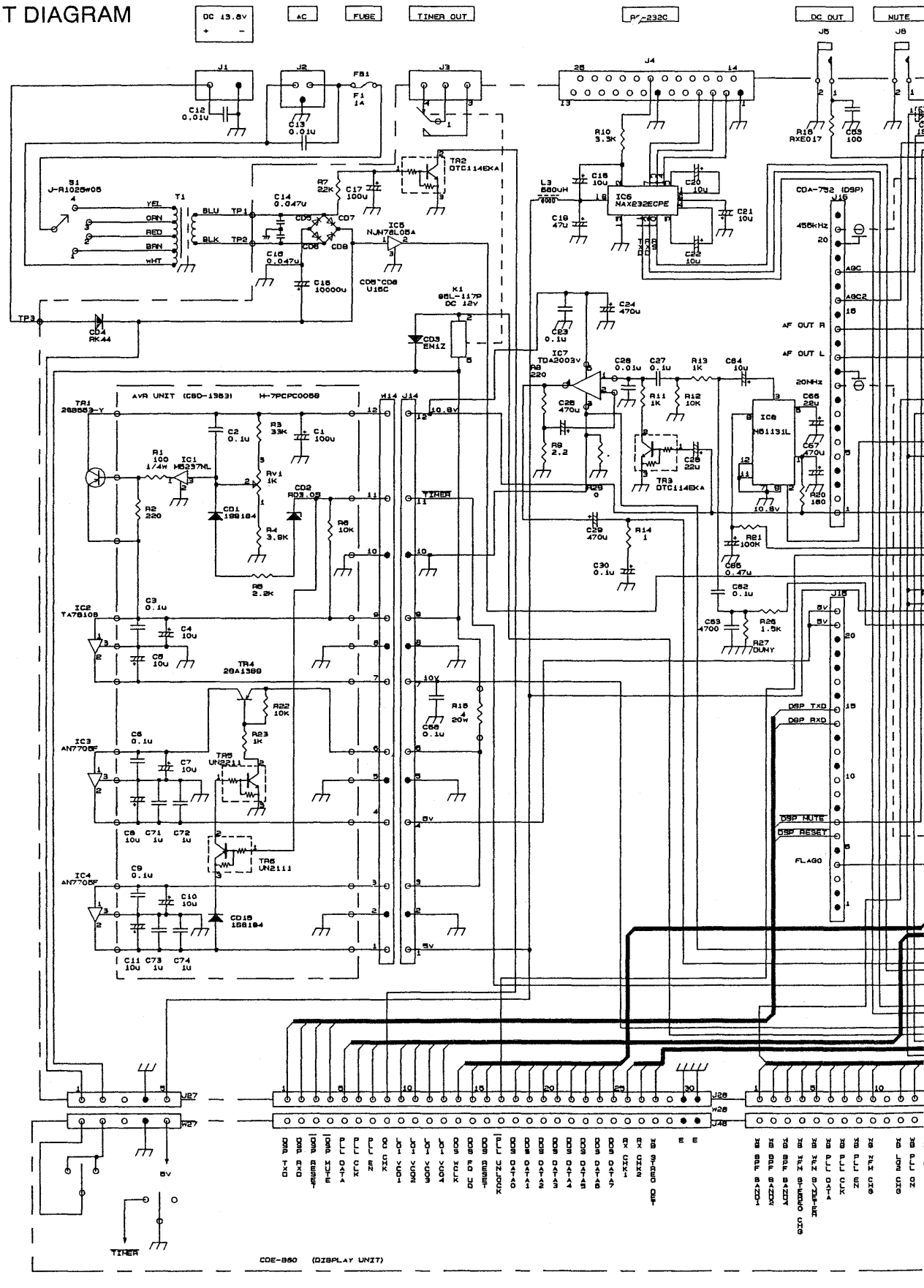

Downloaded by
RadioManual.EU

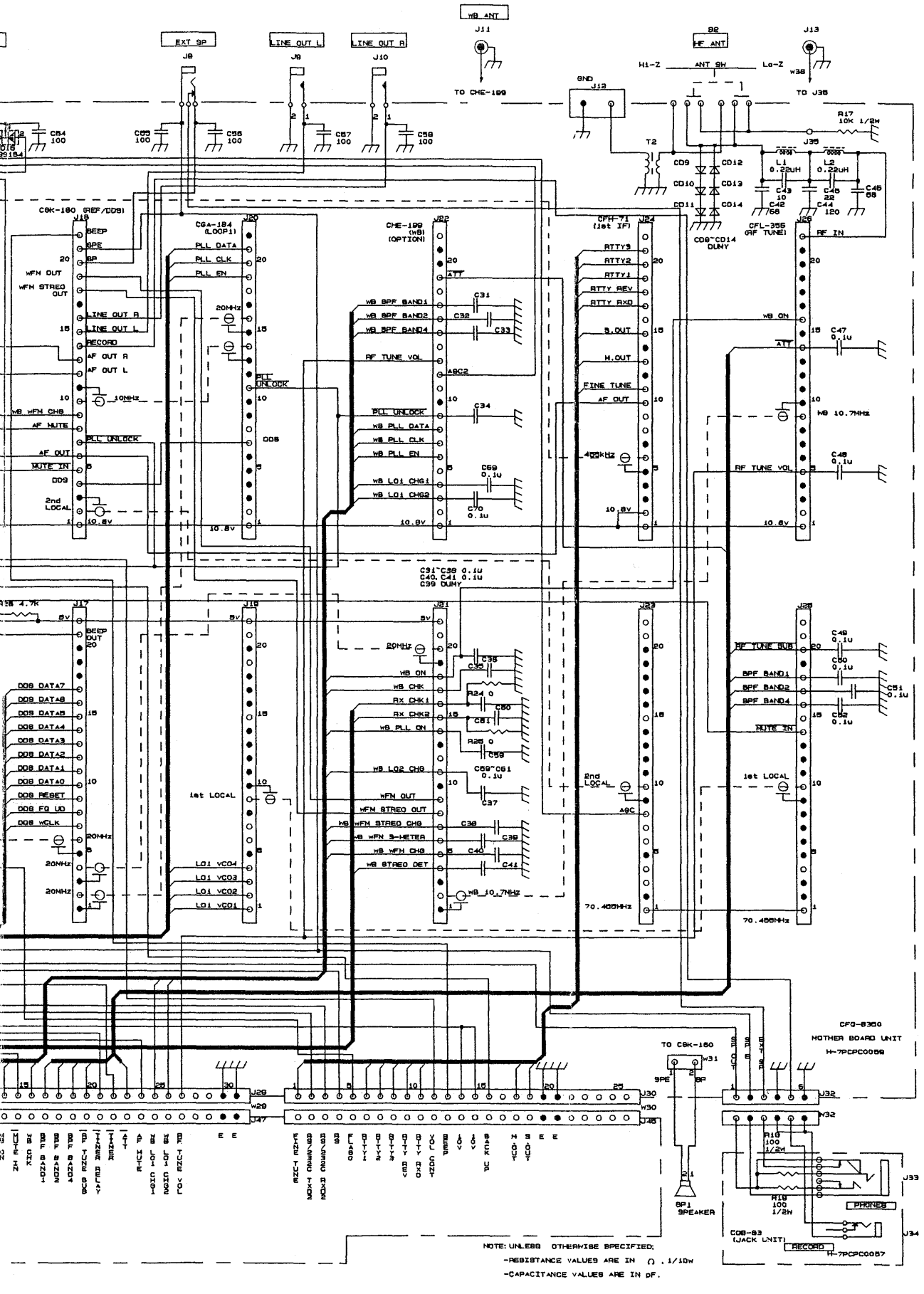

CFQ-8350

MOTHER BOARD UNIT

Downloaded by RadioManual.EU

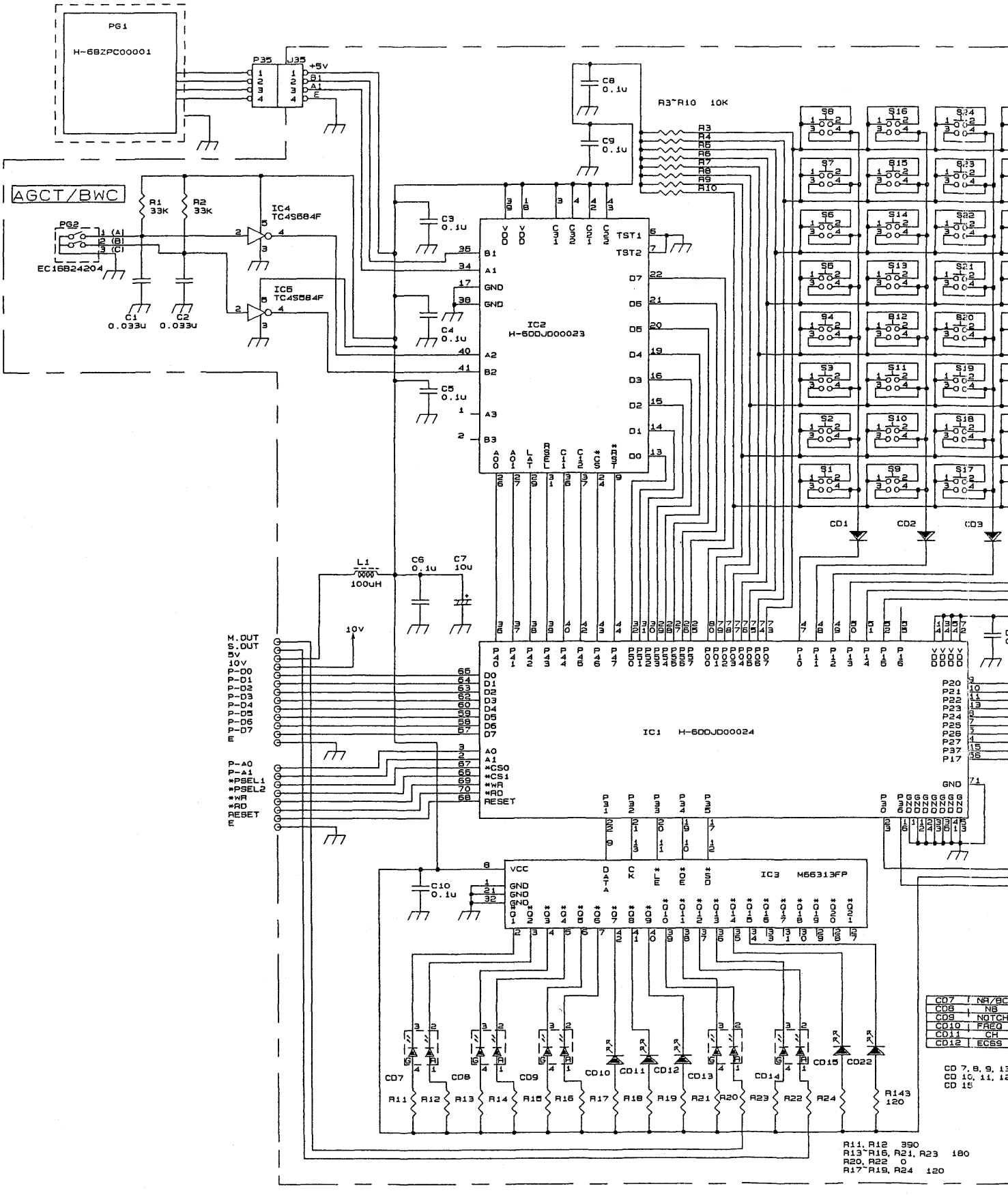

Downloaded by
RadioManual.EU

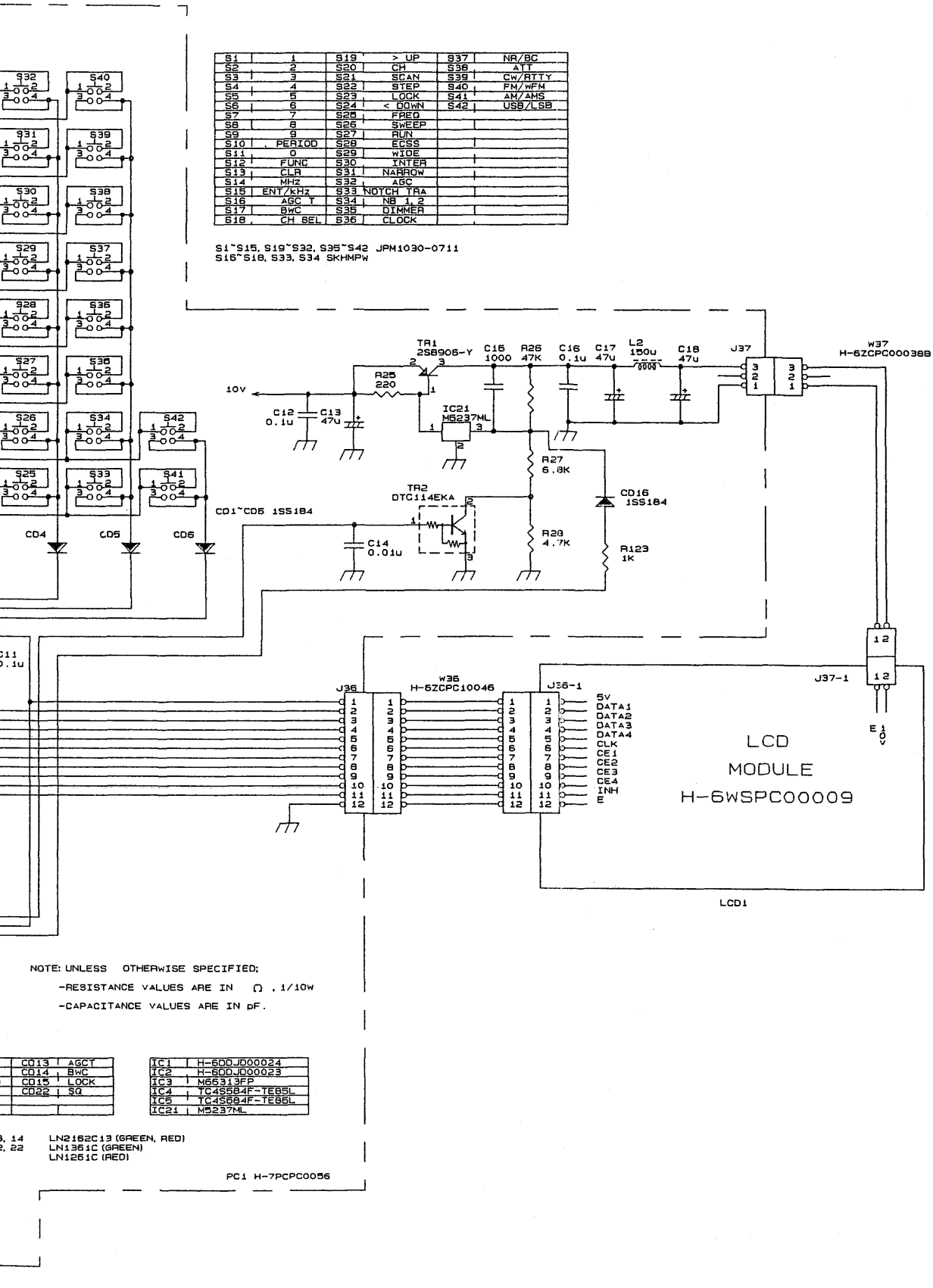

S1	1	S19	> UP	S37	NR/BC
S2	2	S20	CH	S38	ATT
S3	3	S21	SCAN	S39	CW/RTTY
S4	4	S22	STEP	S40	FM/WFM
S5	5	S23	LOCK	S41	AM/AMS
S6	6	S24	< DOWN	S42	USB/LSB
S7	7	S25	FREQ		
S8	8	S26	SWEEP		
S9	9	S27	RUN		
S10	. PERIOD	S28	EDSS		
S11	0	S29	WIDE		
S12	FUNC	S30	INTER		
S13	CLR	S31	NARROW		
S14	MHz	S32	AGC		
S15	ENT/kHz	S33	NOTCH TRA		
S16	AGC T	S34	NB 1, 2		
S17	BWC	S35	DIMMER		
S18	CH SEL	S36	CLOCK		

S1~S15, S19~S32, S35~S42 JPM1030-0711
S16~S18, S33, S34 SKHMPW

CDE-860

DISPLAY UNIT (1/2)

Downloaded by RadioManual.EU

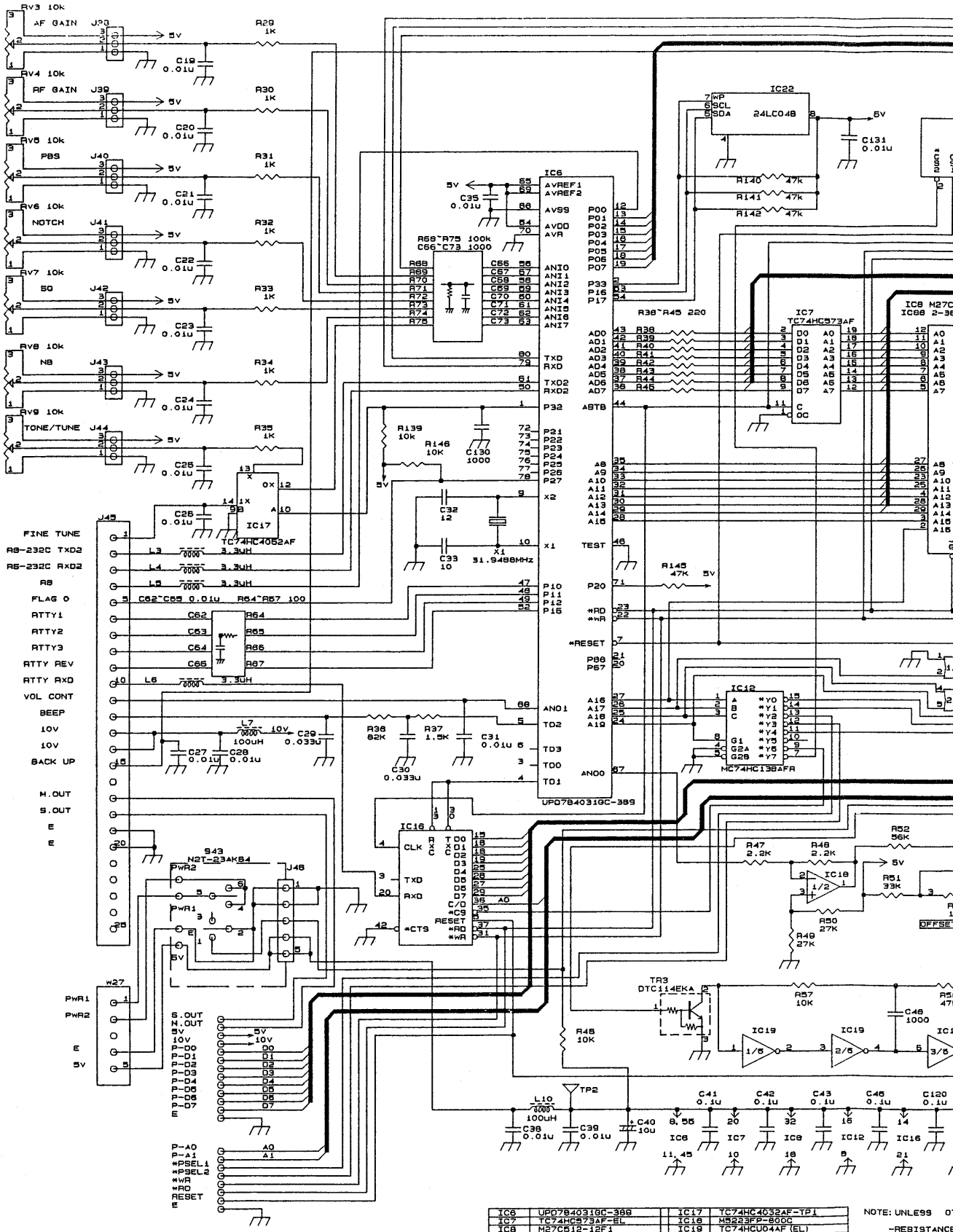

IC6	UPD784031GC-389	IC17	TC74HC4032AF-TP1
IC7	TC74HC573AF-EL	IC18	M5223FP-600C
IC8	M27C512-12F1	IC19	TC74HCU04AF (EL)
IC9	HM62256LFP-85LT	IC20	TD62083F
IC10	MSM6242BGS	IC22	24LC04B-T-SN
IC11	TC4S66F	IC23	M51953BFP
IC12	MC74HC138AFR	IC24	TC4S584F-TE85L
IC15	H-60DJ000024	IC25	TC74HC32AF
IC16	UPD71051GB-384		

NOTE: UNLESS O

-RESISTANCE

-CAPACITANC

PC1 H-7PCPC0056

Downloaded by
RadioManual.EU

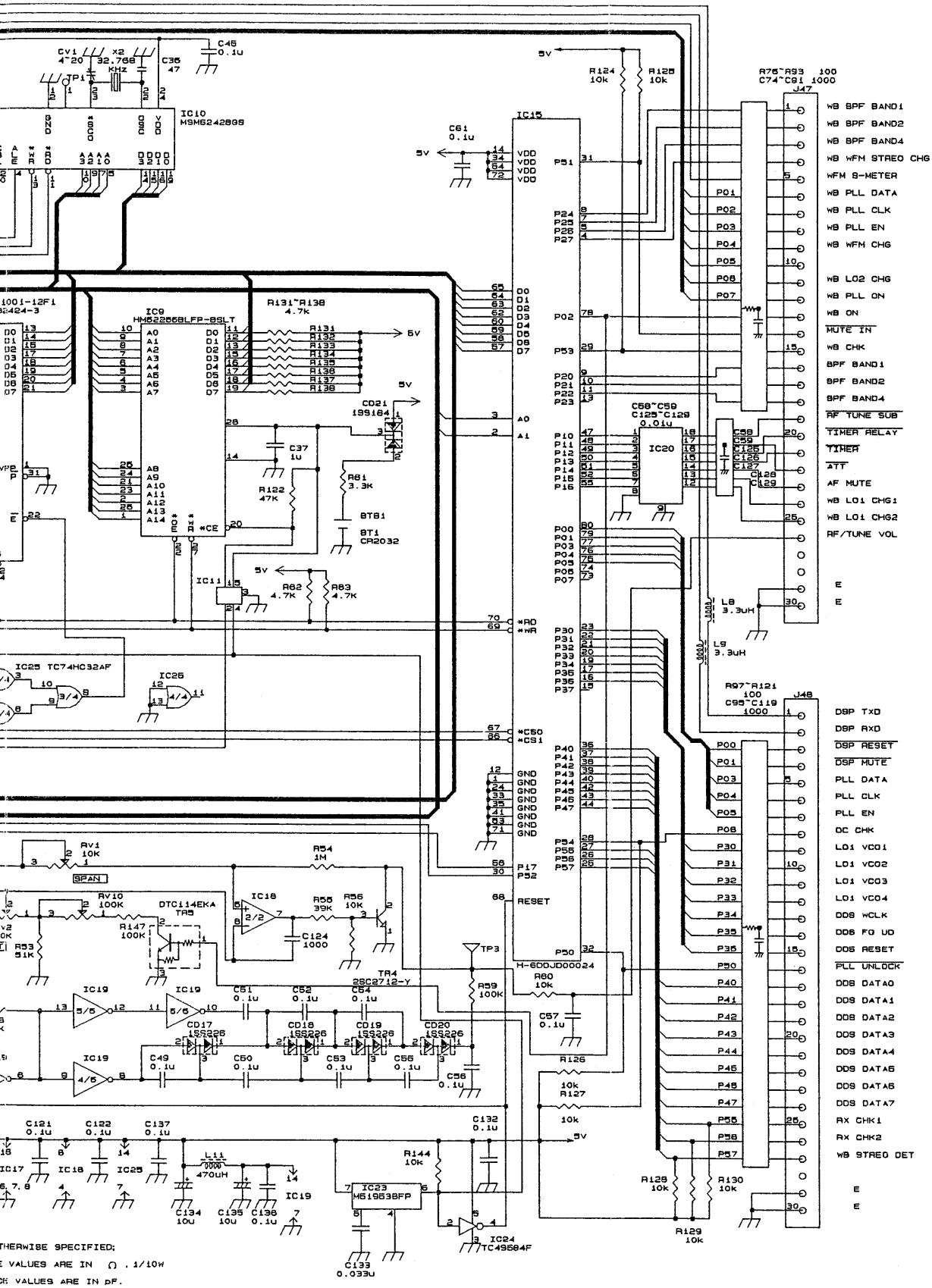

CDE-860

DISPLAY UNIT (2/2)

Downloaded by RadioManual.EU

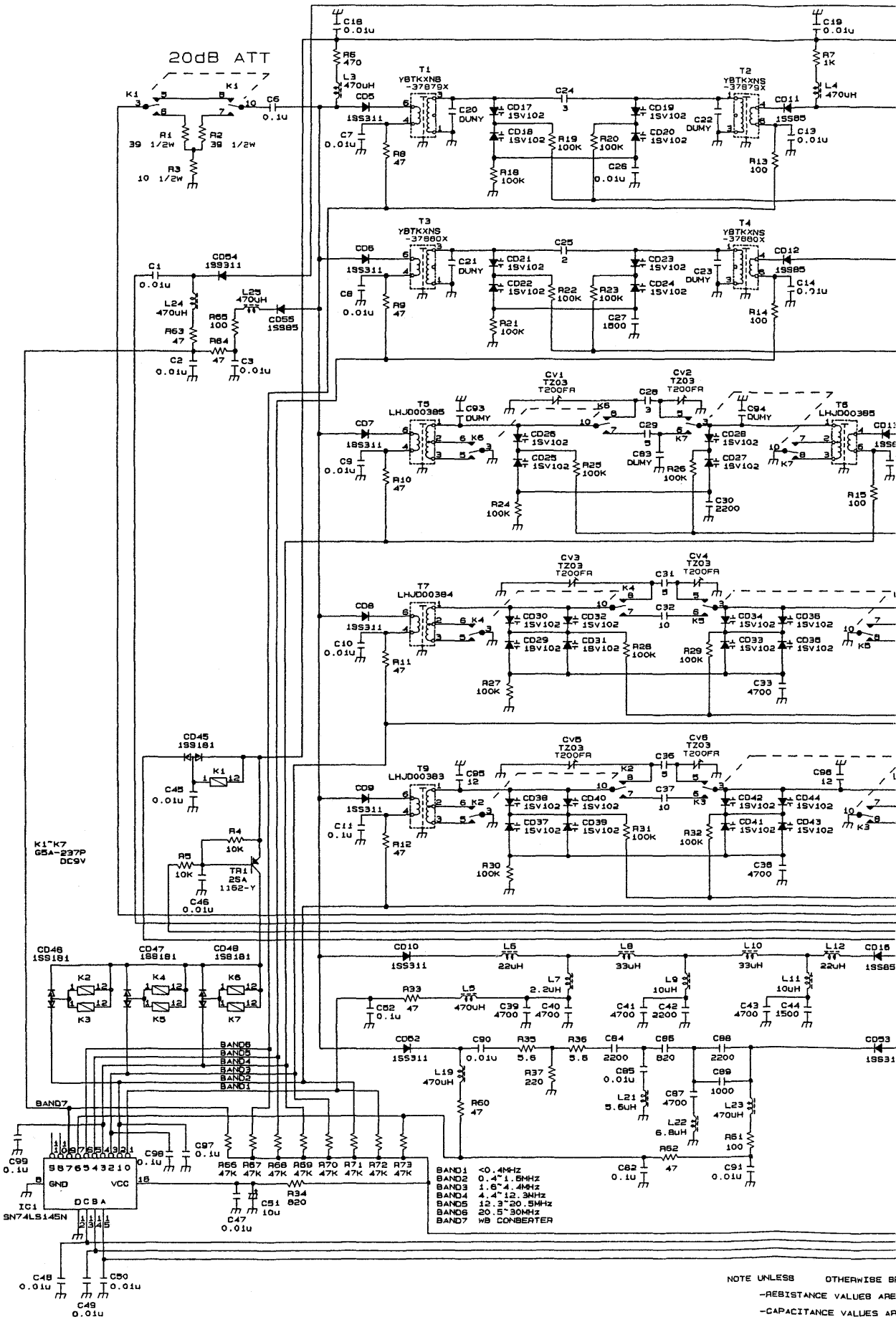

Downloaded by RadioManual.EU

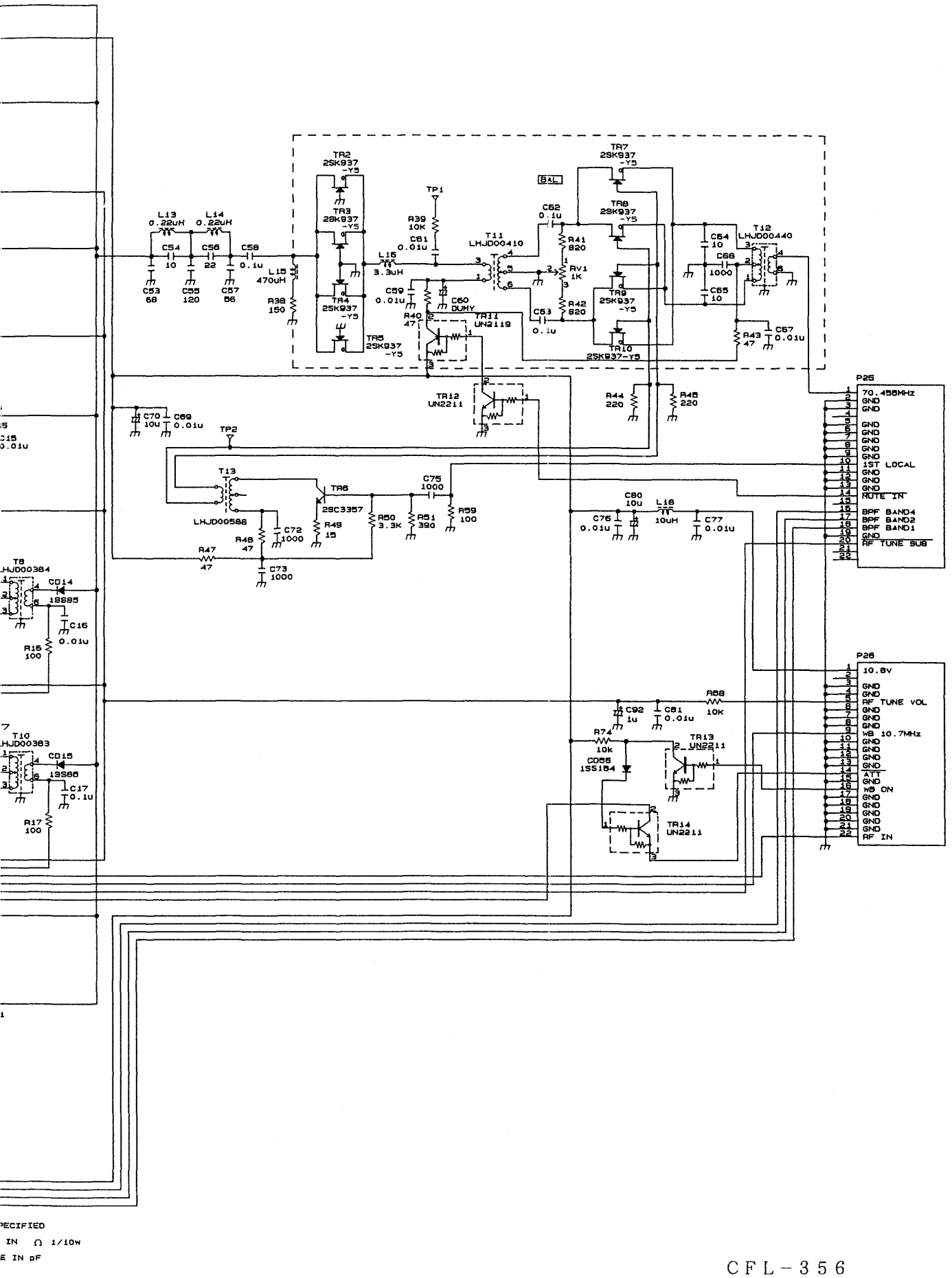

PECIFIED

IN Ω 1/10W

E IN pF

CFL-356

RF TUNE UNIT

Downloaded by RadioManual.EU

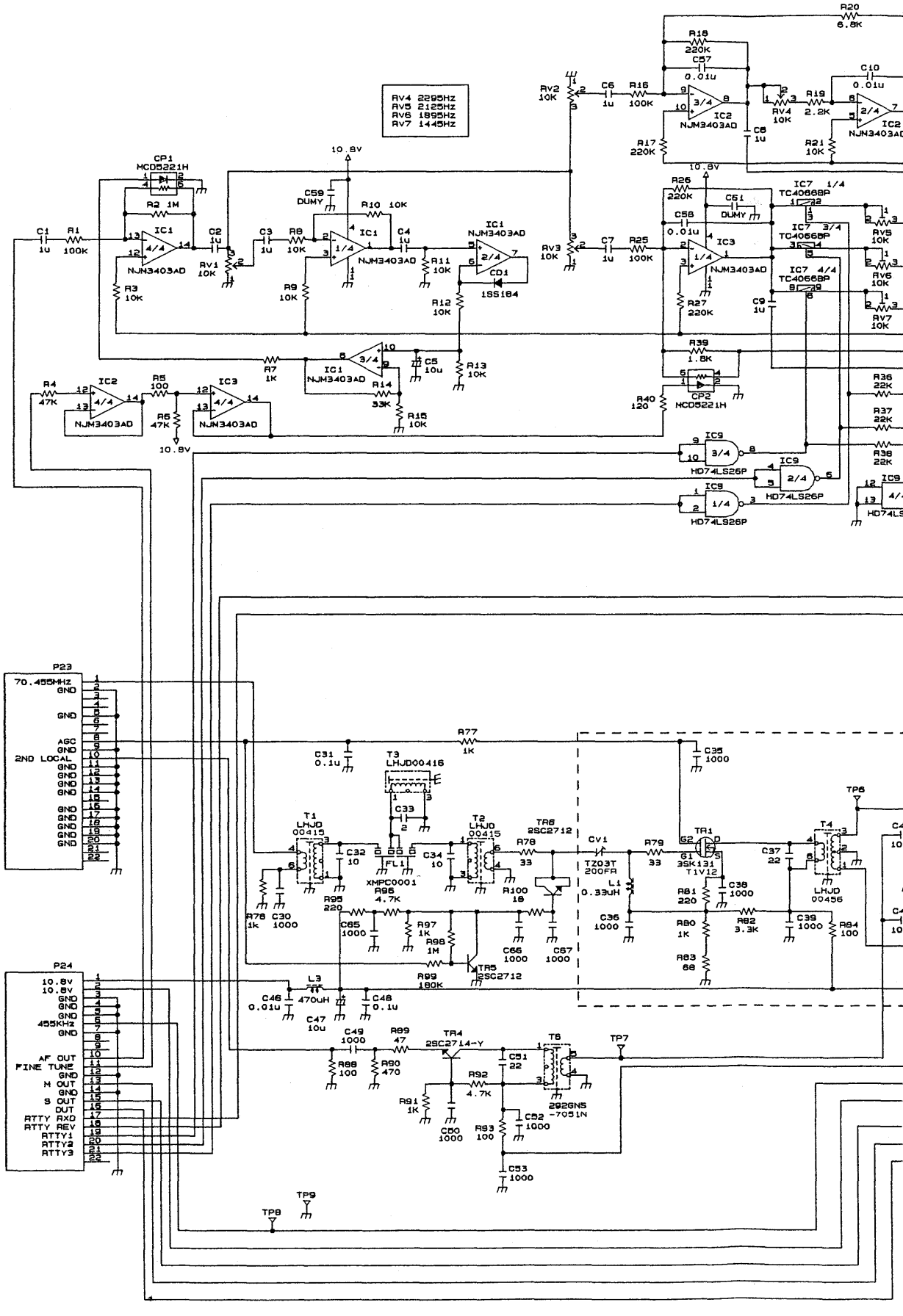

Downloaded by
RadioManual.EU

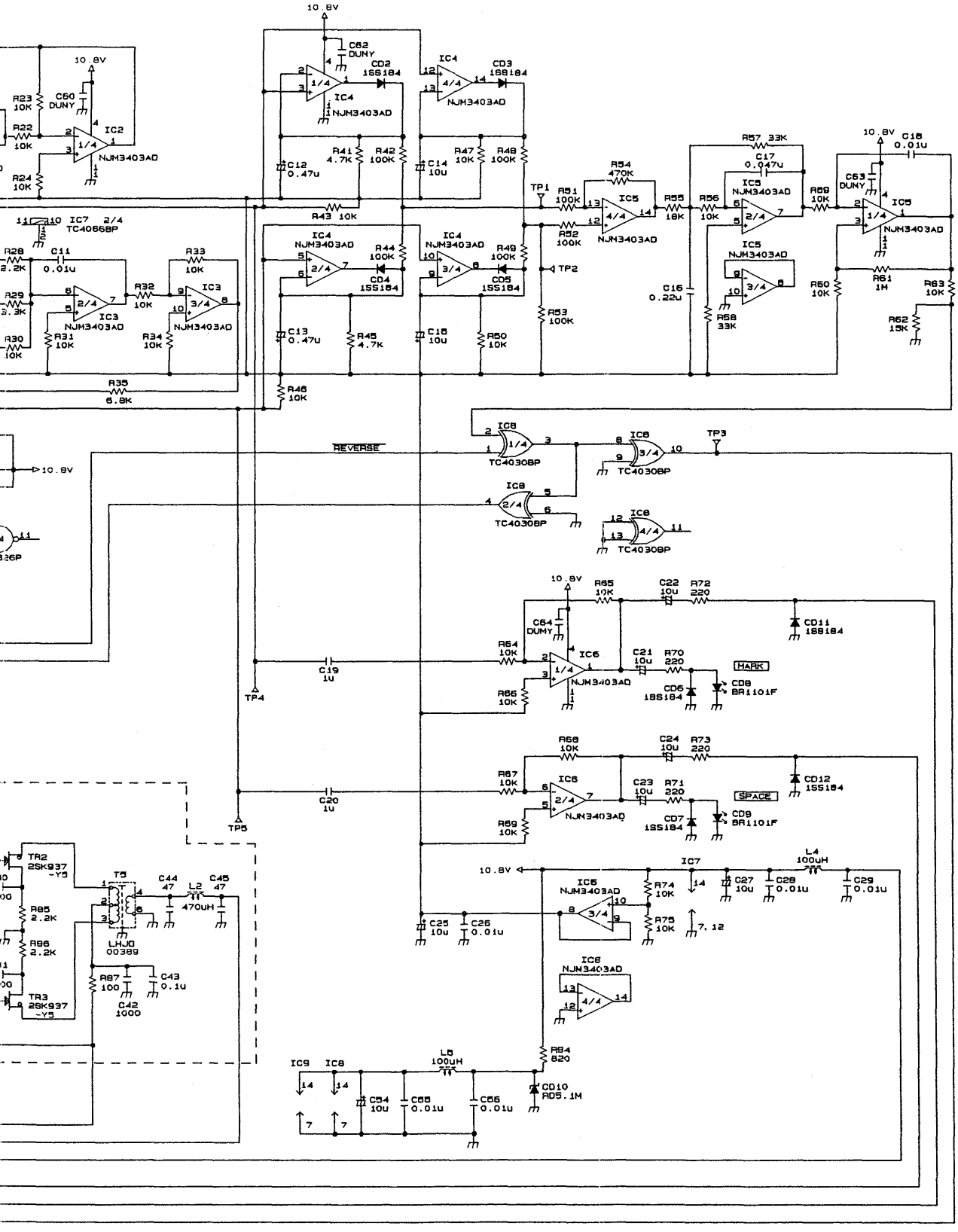

NOTE: UNLESS OTHERWISE SPECIFIED
-RESISTANCE VALUES ARE IN Ω 1/10W
-CAPACITANCE VALUES ARE IN pF PC1 H-7PCPC0051

CFH-71

1ST IF UNIT

Downloaded by RadioManual.EU

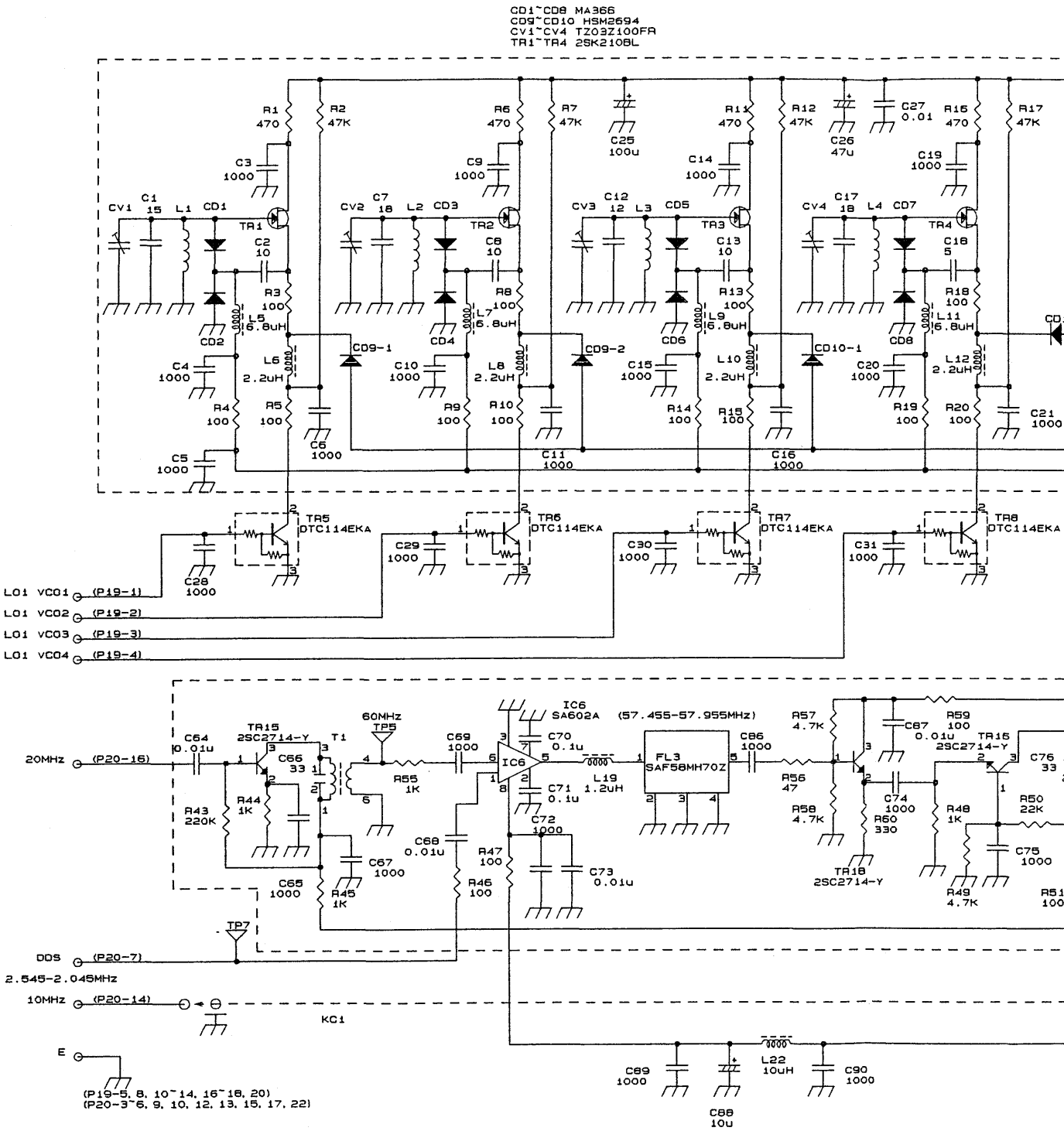

NOTE: UNLESS OTHERWISE SPECIFI
-RESISTANCE VALUES ARE IN
-CAPACITANCE VALUES ARE IN

PC1 H-7PCPC0053

Downloaded by
RadioManual.EU

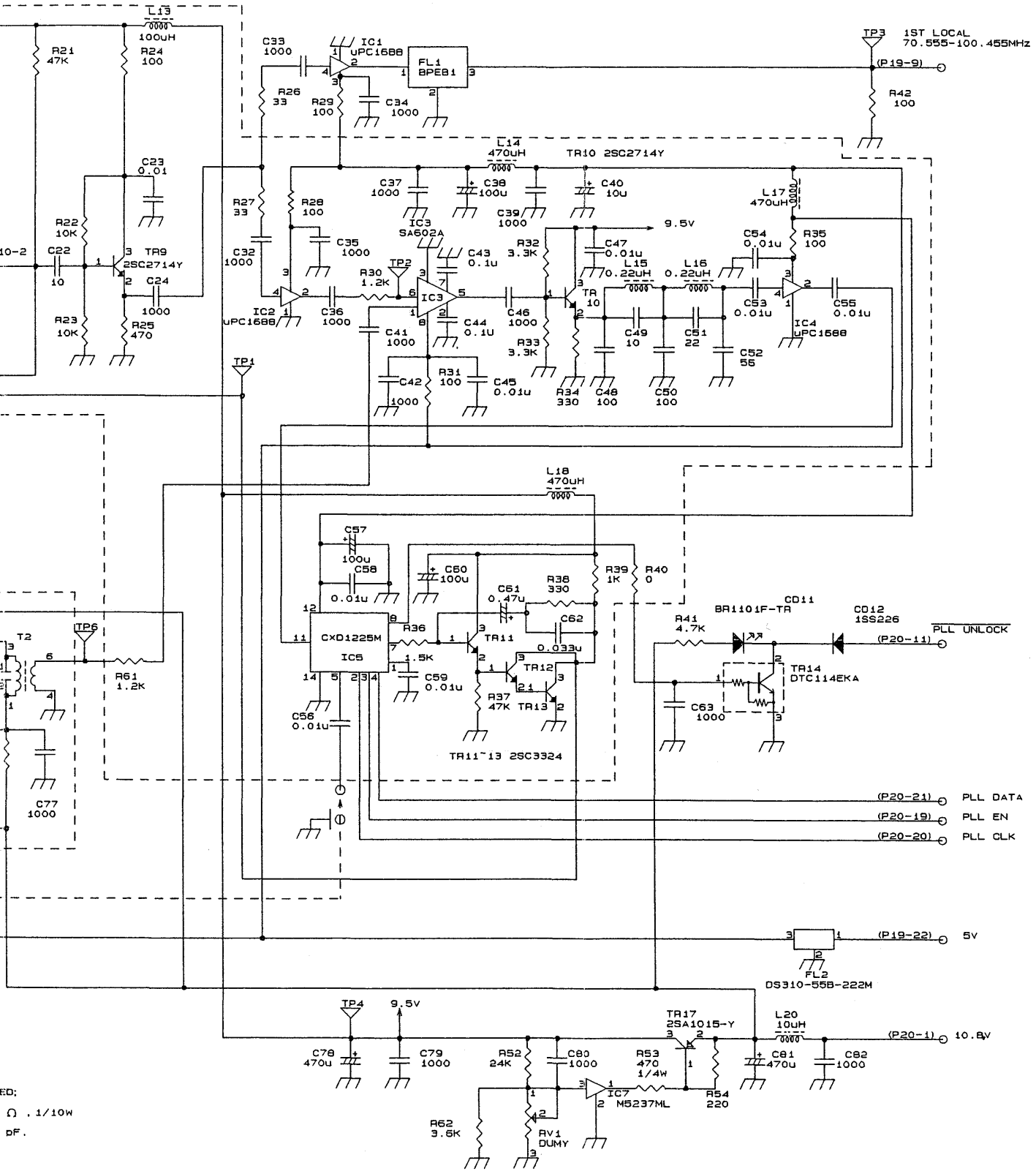

CGA-184

LOOP1 UNIT

Downloaded by
RadioManual.EU

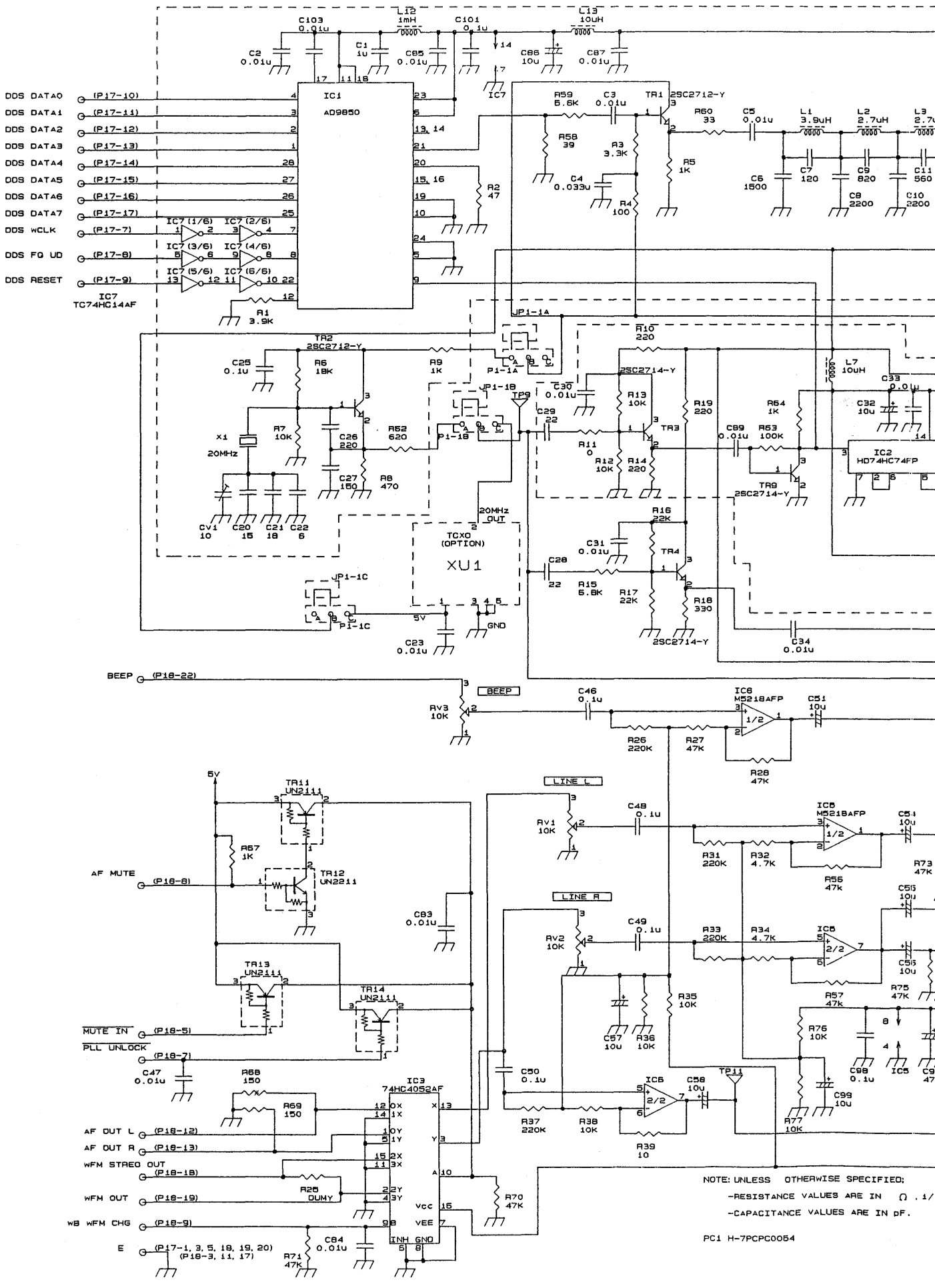

Downloaded by
RadioManual.EU

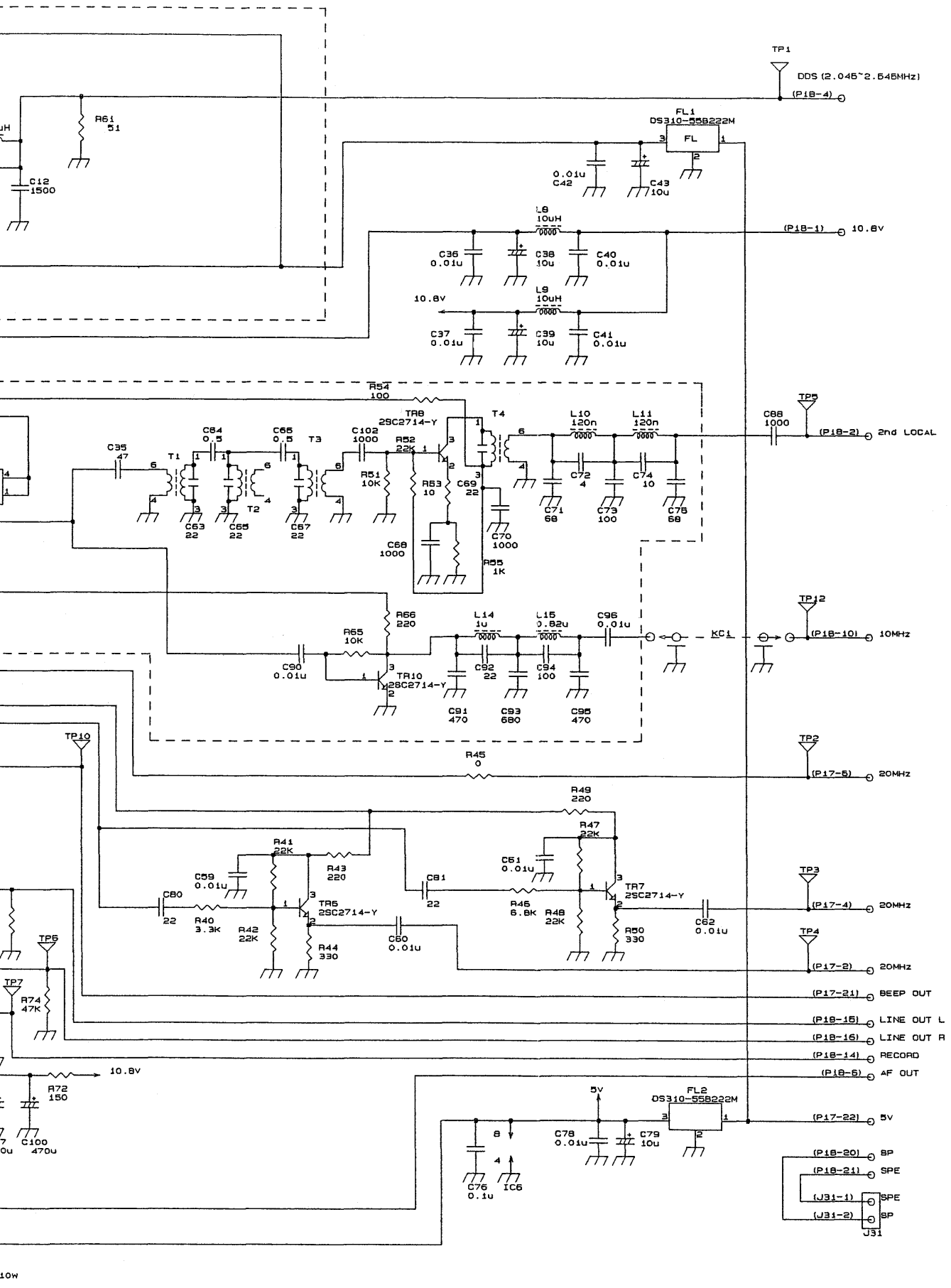

CGK-160

REF/DDS UNIT

Downloaded by
RadioManual.EU

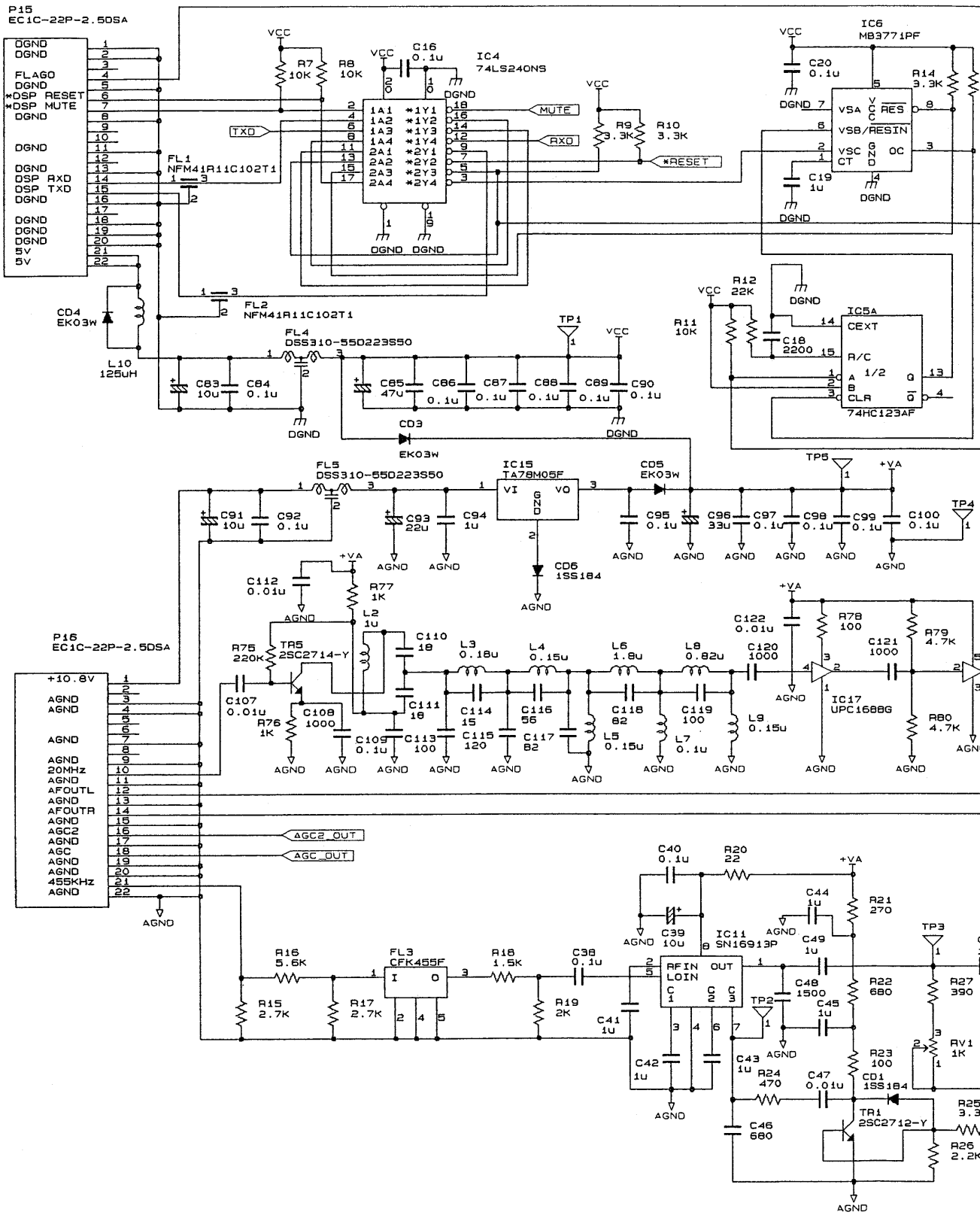

Downloaded by
RadioManual.EU

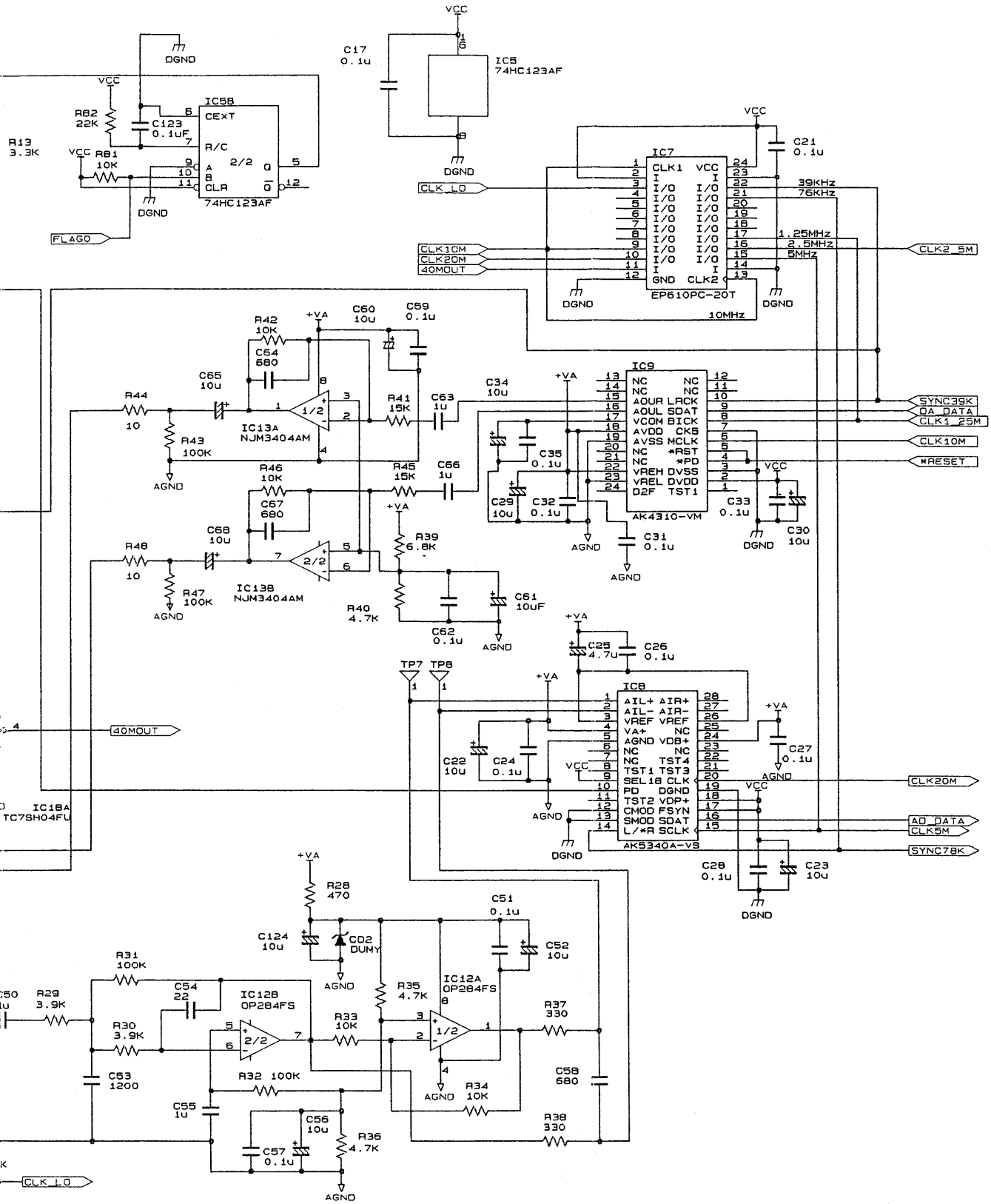

CDA-752

DSP UNIT(1/2)

Downloaded by
RadioManual.EU

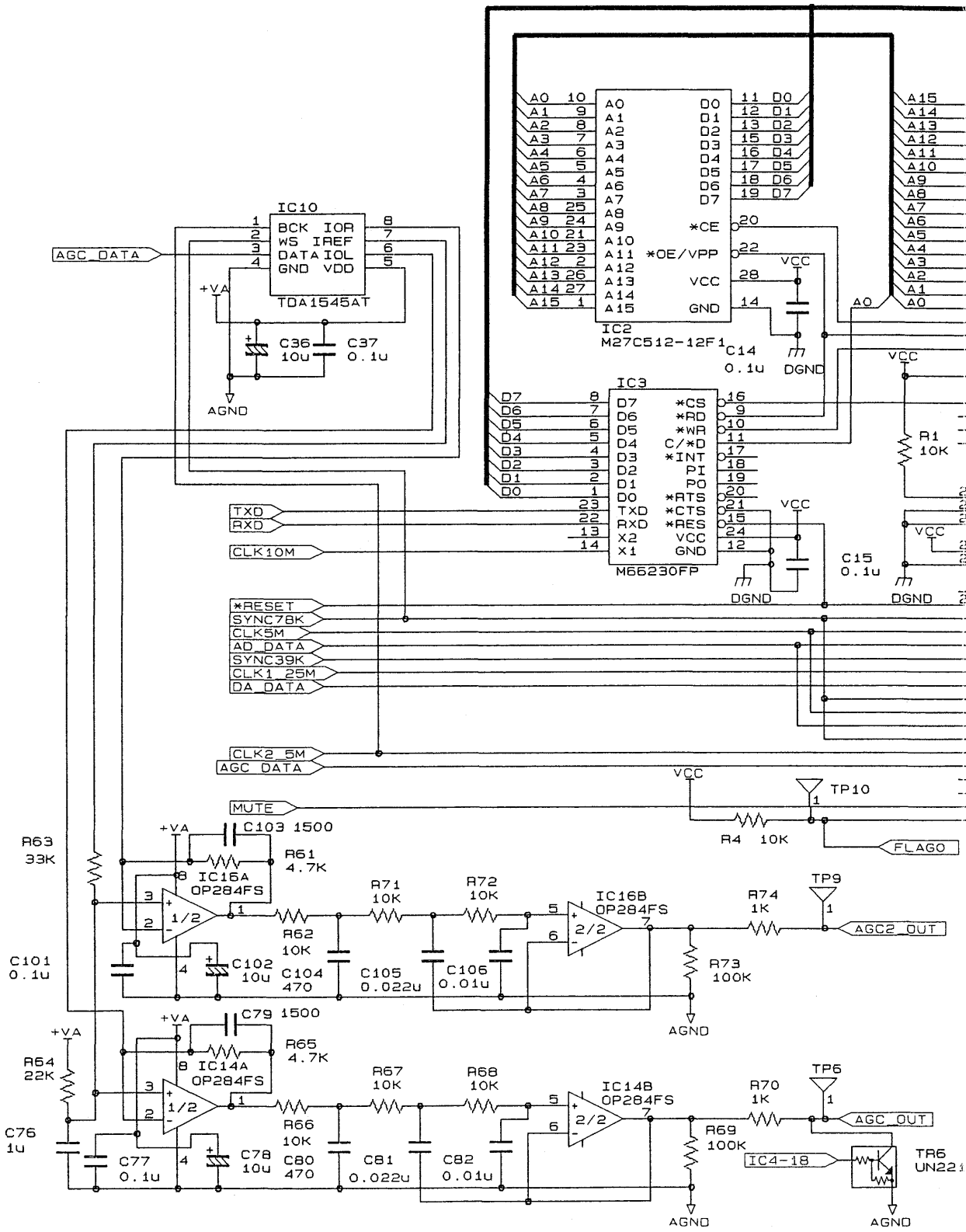

Downloaded by
RadioManual.EU

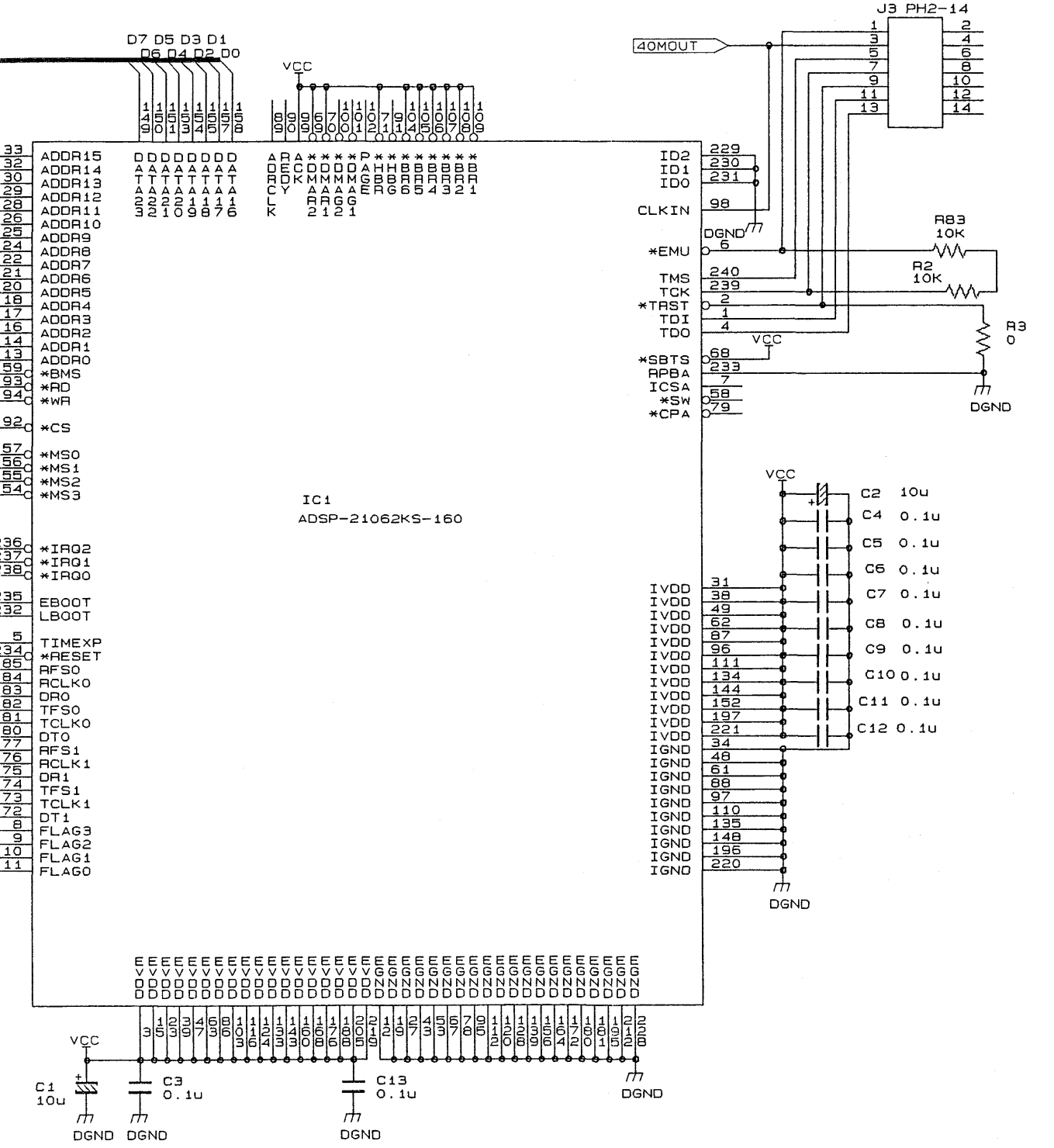

CDA-752

DSP UNIT (2/2)

Downloaded by
RadioManual.EU

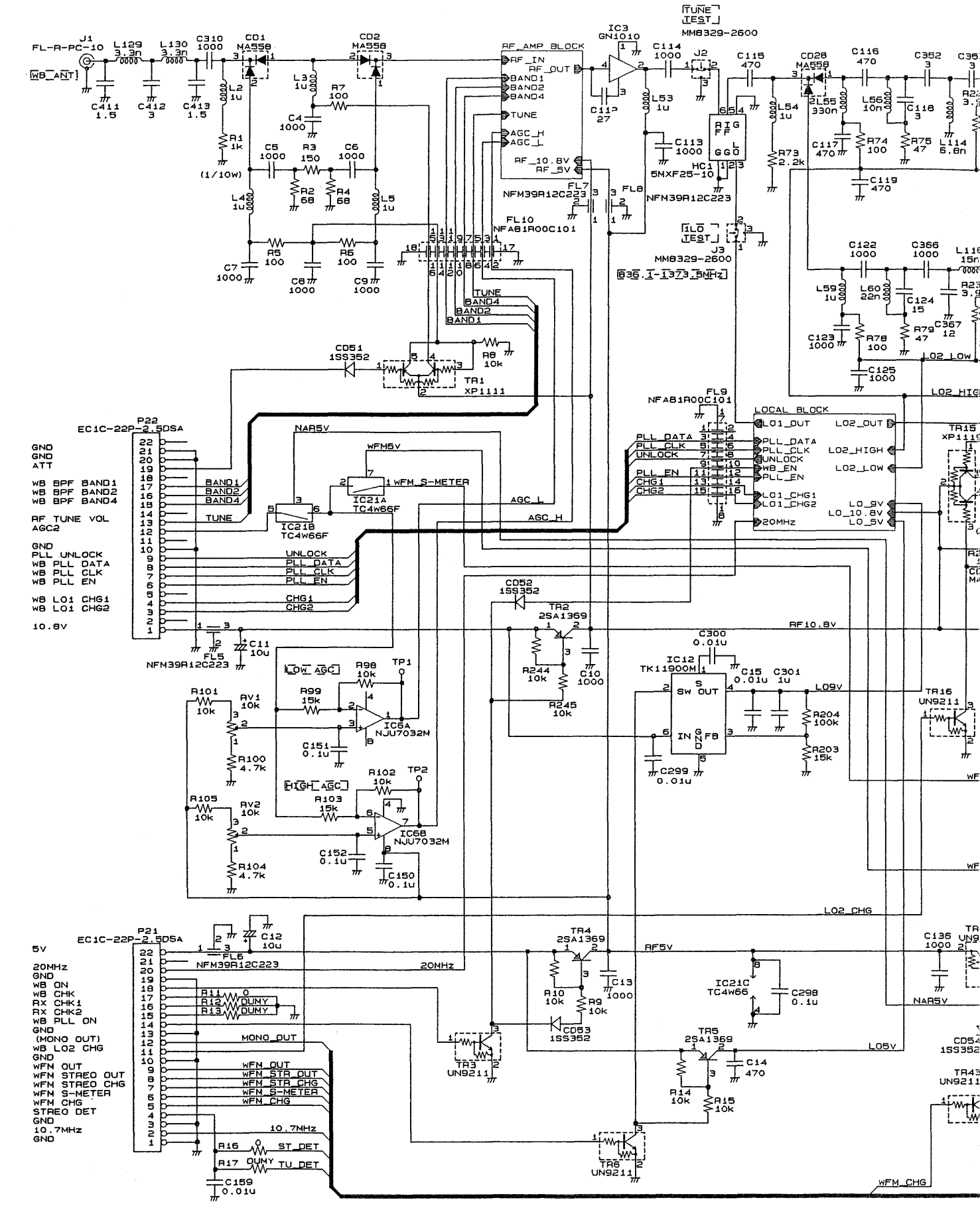

NOTE: Unless otherwise specified;

-Capacitance values are in pF.

-Inductance values are in H.

-Resistance values are in Ω. (1/16W)

PC: 7PCPC0052A

Downloaded by RadioManual.EU

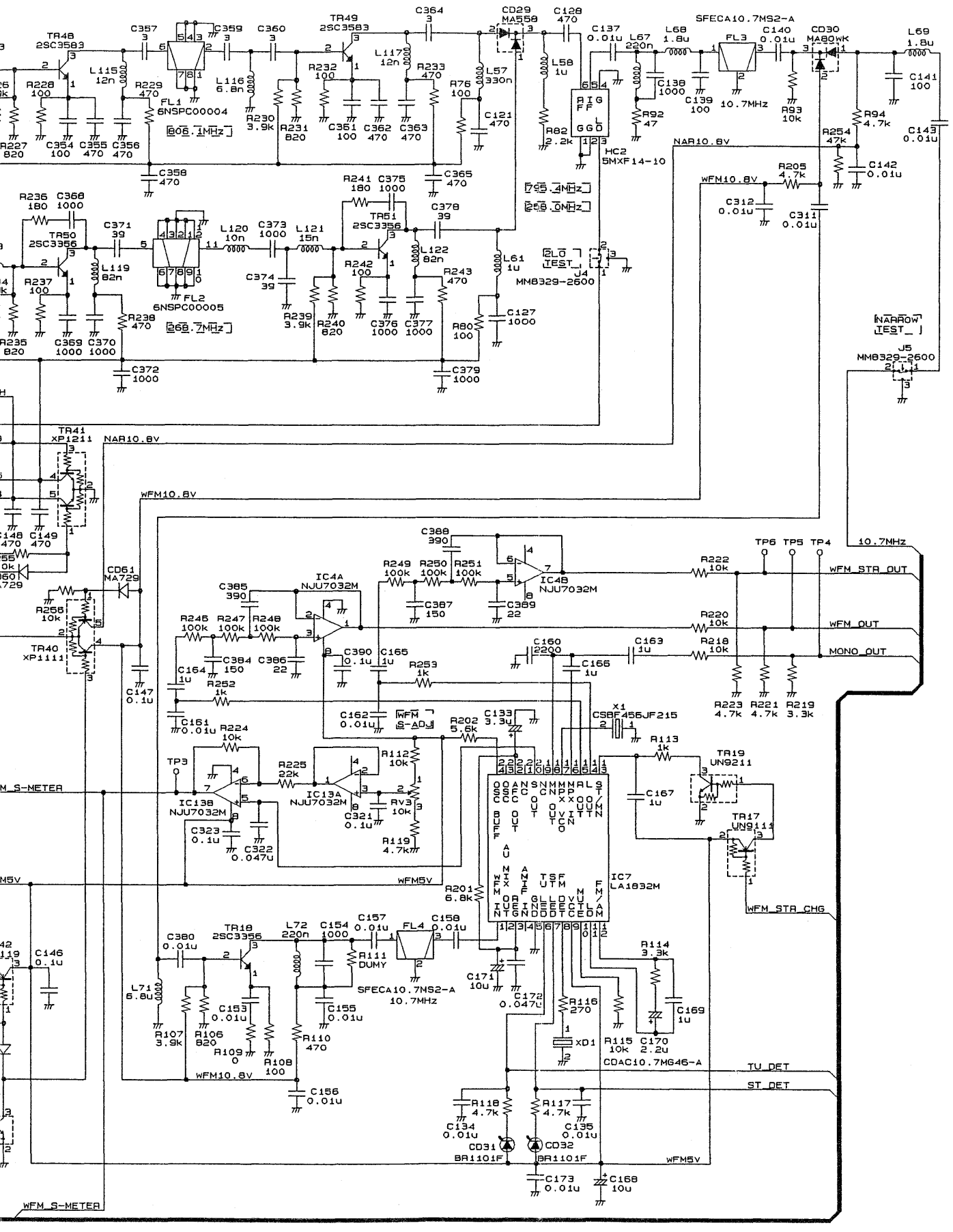

Downloaded by RadioManual.EU

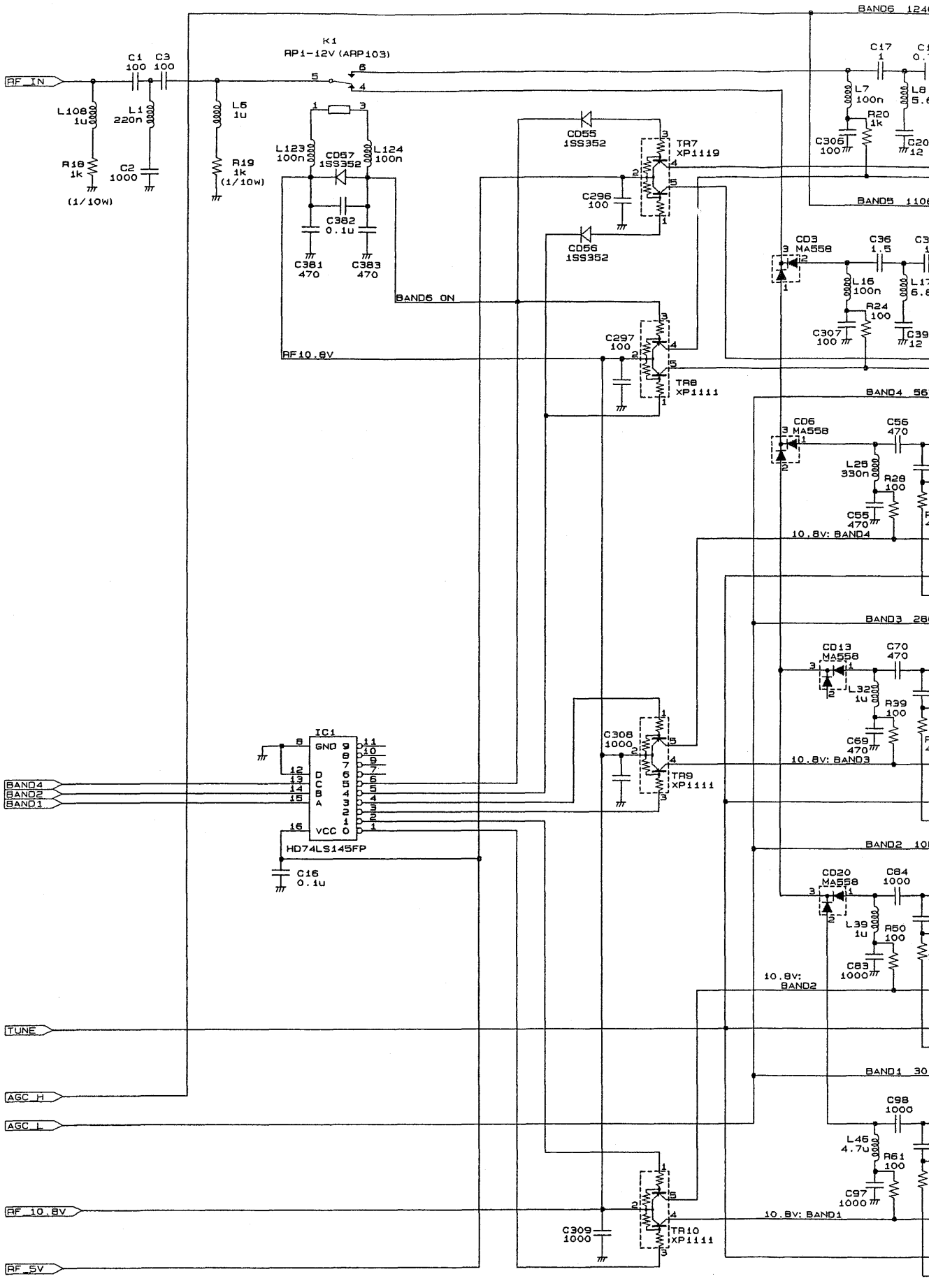

NOTE: Unless otherwise specified;

-Capacitance values are in pF.

-Inductance values are in H.

-Resistence values are in Ω. (1/16W)

Downloaded by
RadioManual.EU

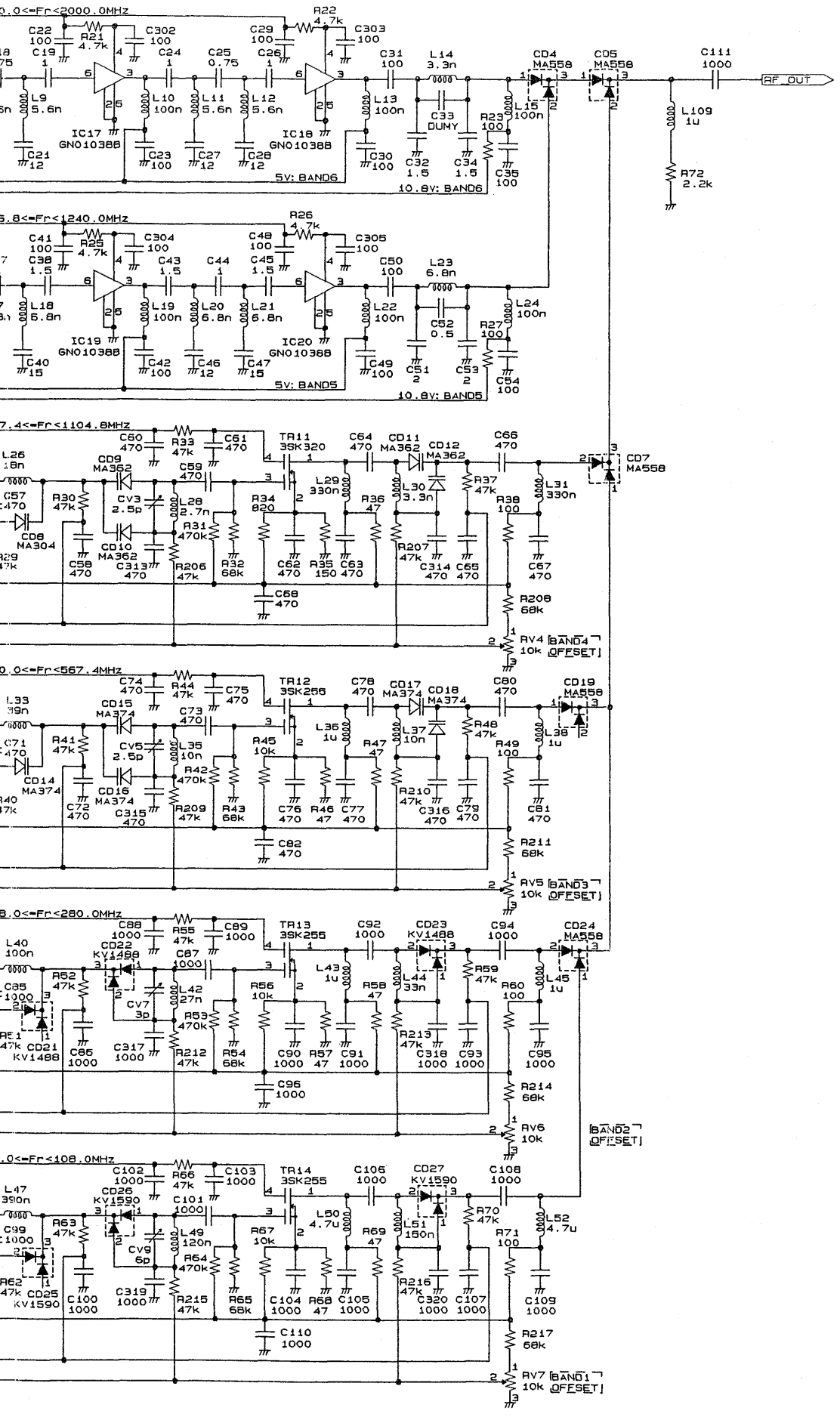

CHE-199

WIDEBAND CONVERTER UNIT (2/3)

Downloaded by
RadioManual.EU

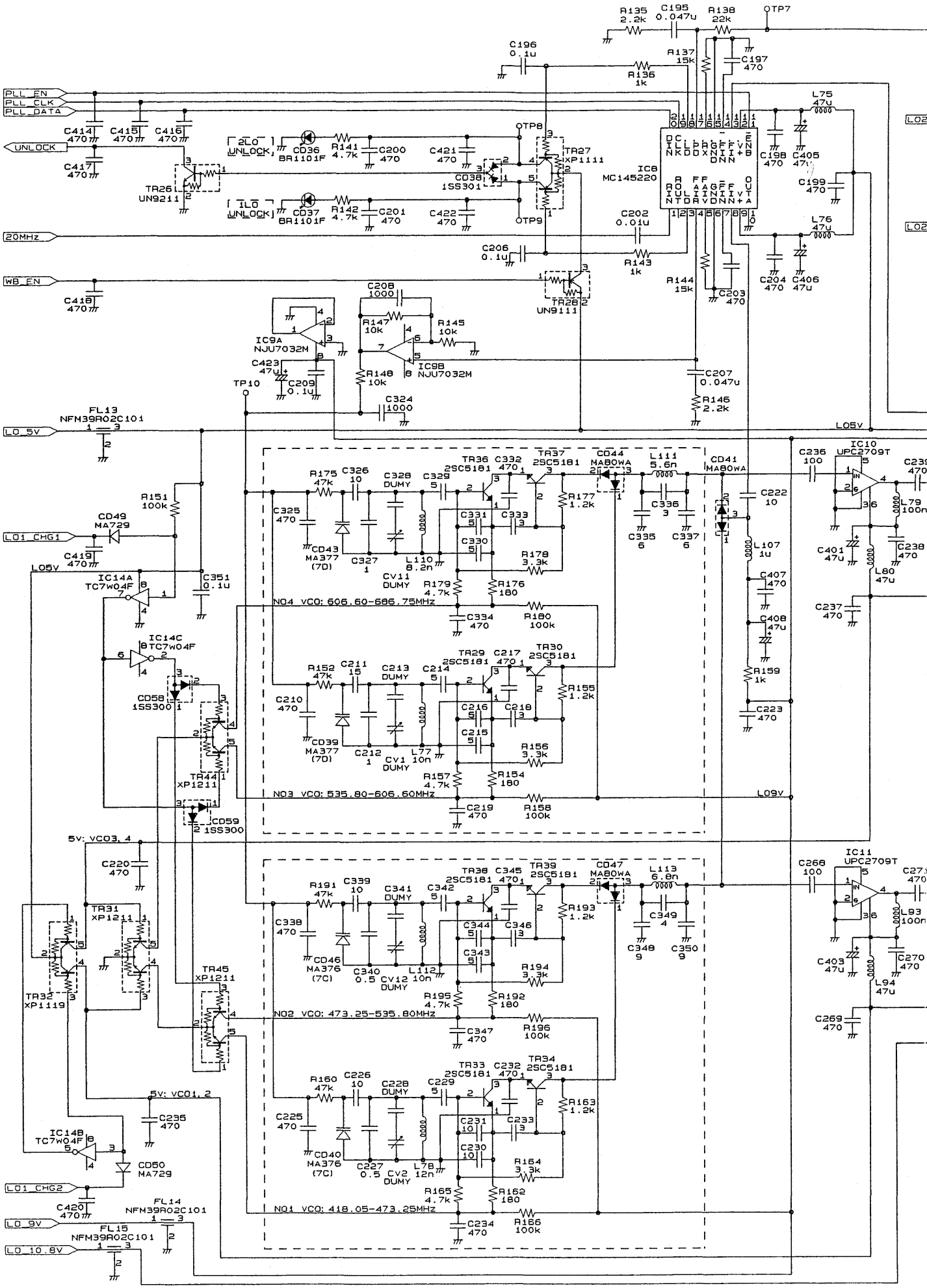

Downloaded by
RadioManual.EU

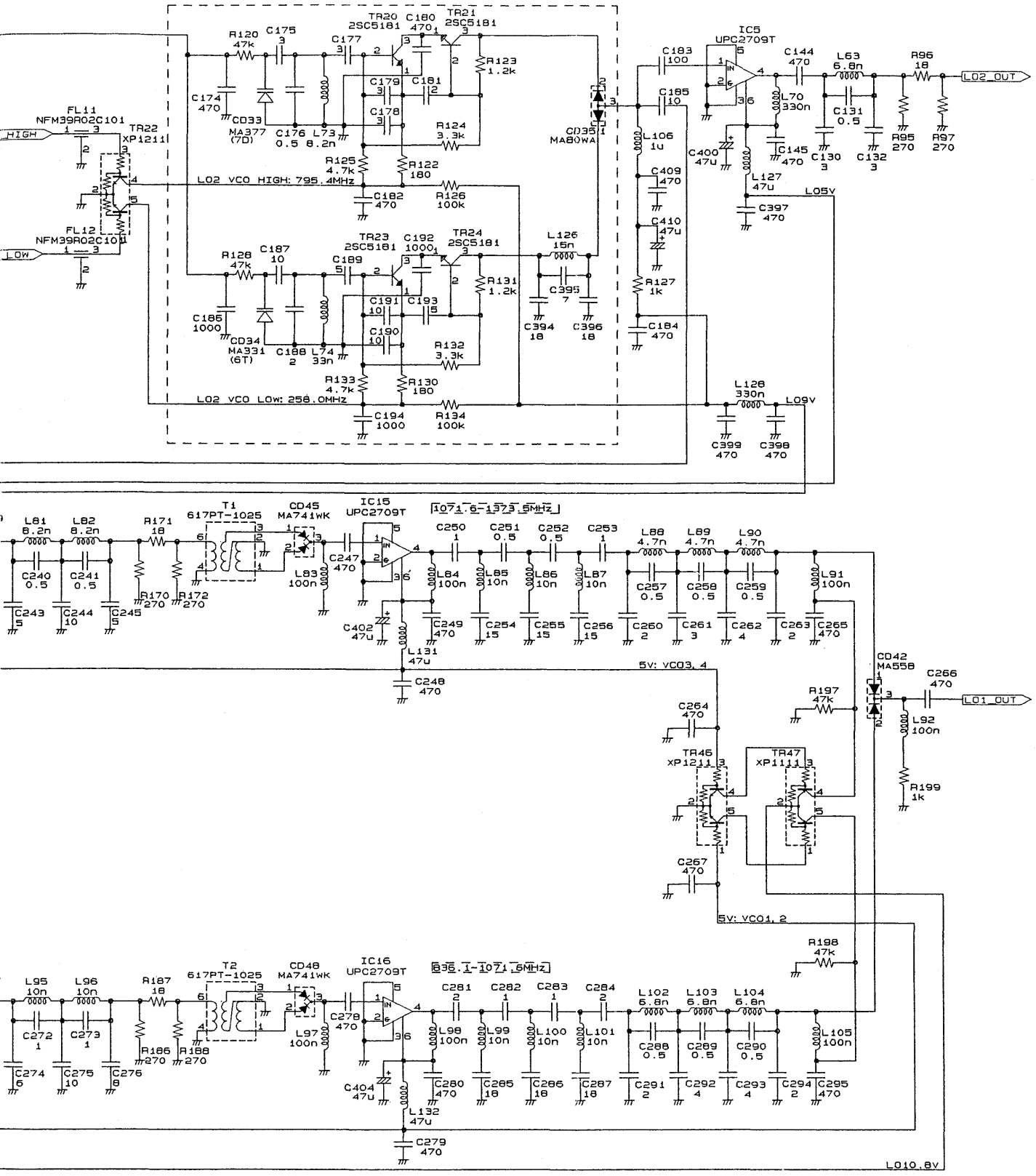

VCO SELECT TABLE

CHG2	CHG1	ON VCO
HI-Z	HI-Z	NO4 VCO
HI-Z	LO	NO3 VCO
LO	HI-Z	NO2 VCO
LO	LO	NO1 VCO

NOTE: Unless otherwise specified;

-Capacitance values are in pF.

-Inductance values are in H.

-Resistance values are in Ω. (1/16W)

CHE-199

WIDEBAND CONVERTER UNIT (3/3)

Downloaded by RadioManual.EU