HAMBUILDER

www.hambuilder.com

HBR2HF Dual Band HF Transceiver

80m & 40m

Power up to 100 Watt

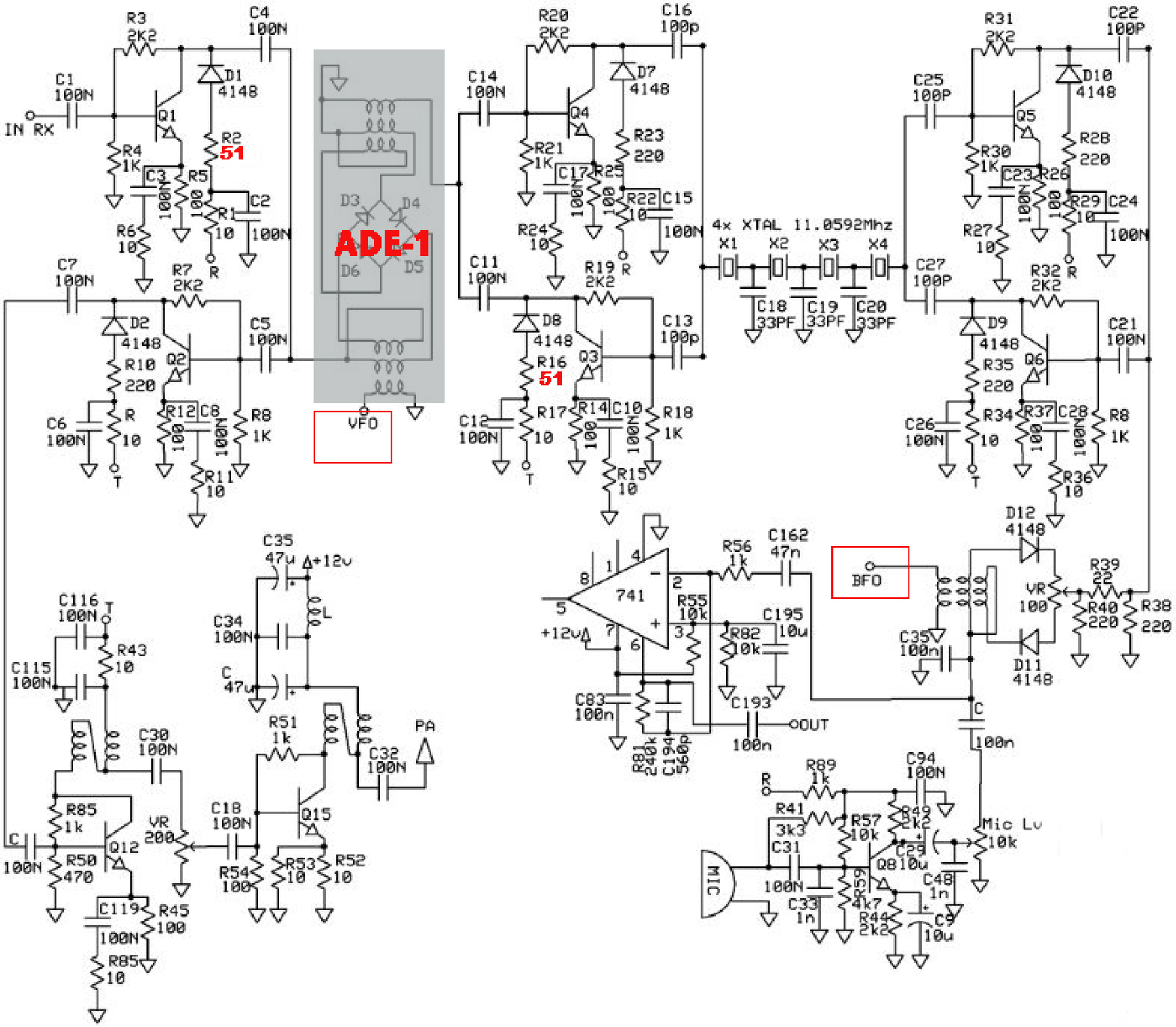

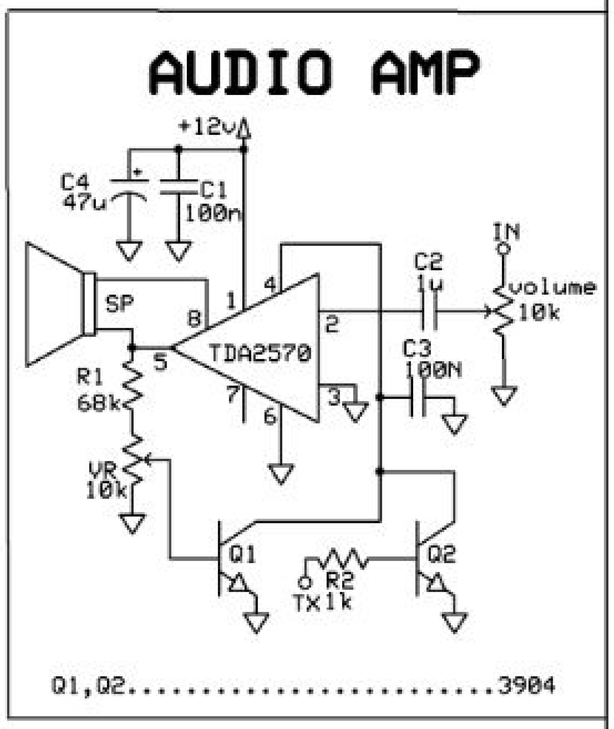

Q1,Q2,Q3,Q4,Q5,Q6,Q8.....3904

Q12.....2N2222

Q15.....C1162

HAMBUILDER

BRITX

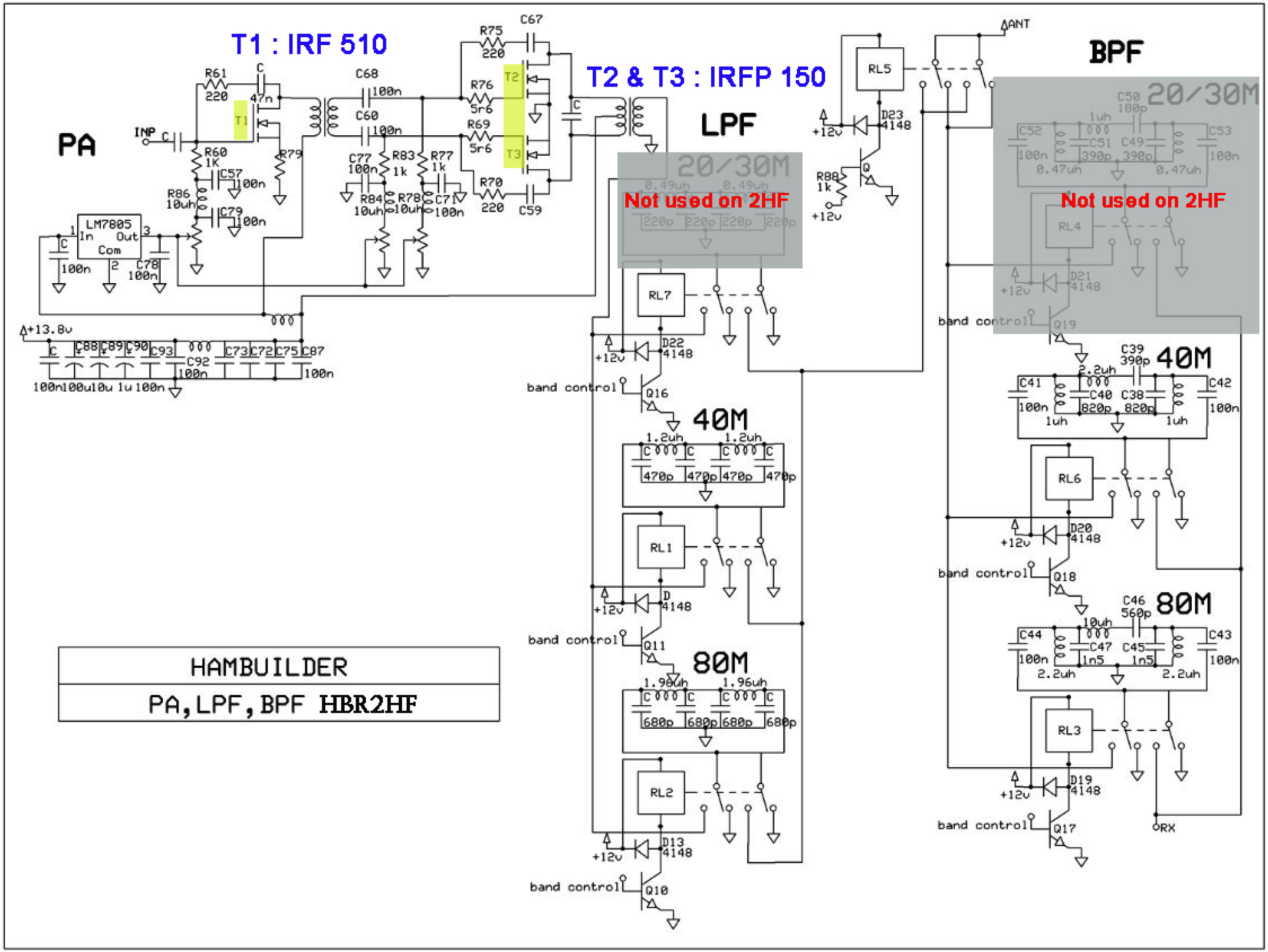
T1 : IRF 510
T2 & T3 : IRFP 150
PA
LPF
BPF
20/30M
Not used on 2HF
40M
80M
LM7805
In
Out
Com
INP
ANT
RX
+13.8v
+12v
band control
RL1
RL2
RL3
RL4
RL5
RL6
RL7
Q10
Q11
Q16
Q17
Q18
Q19
D13 4148
D20 4148
D21 4148
D22 4148
D23 4148
HAMBUILDER
PA,LPF,BPF HBR2HF