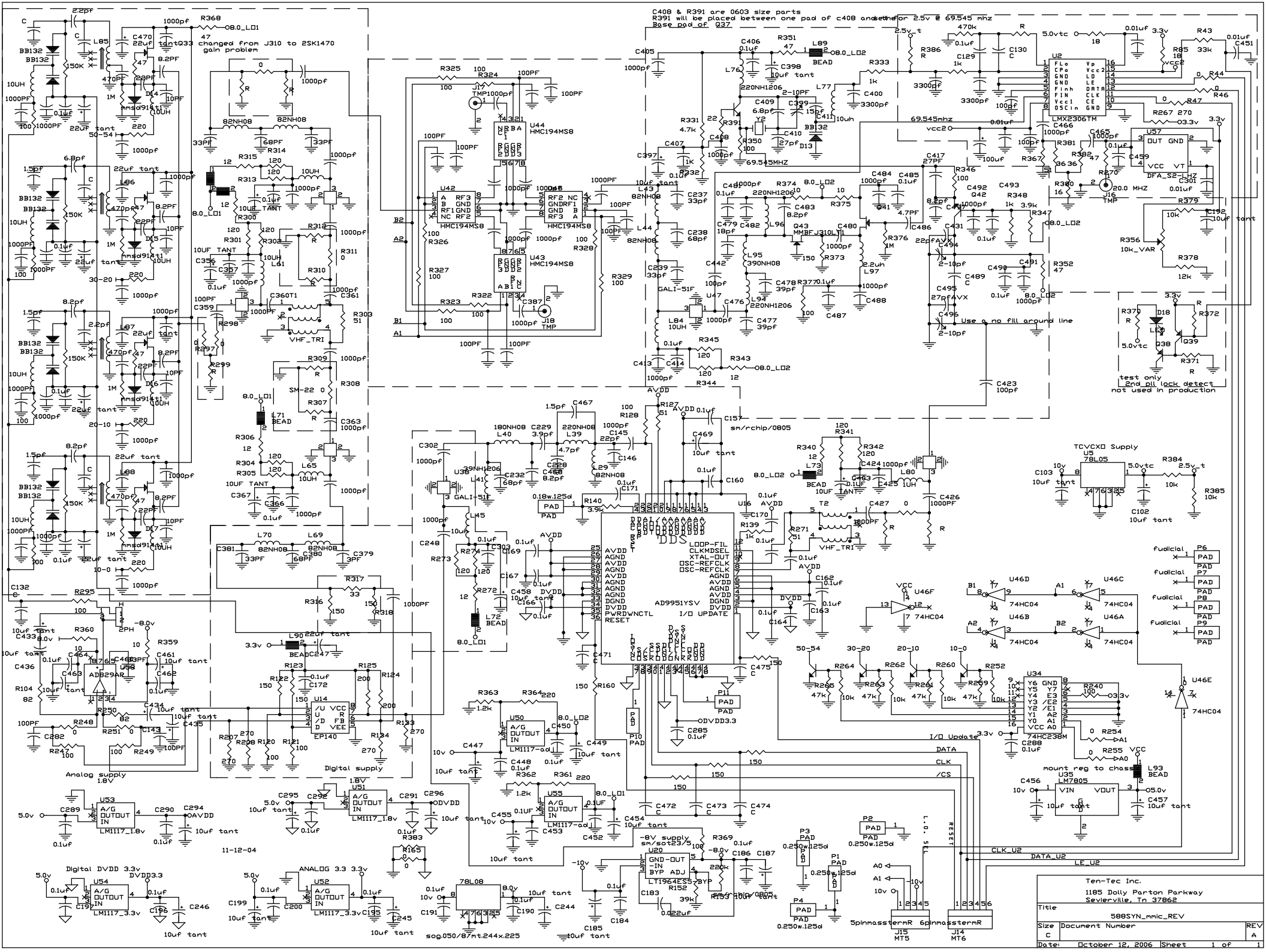
C408 & R391 are 0603 size parts
R391 will be placed between one pad of C408 and the
Base pad of Q37
set for 2.5v @ 69.545 mhz
Q33 changed from J310 to 2SK1470
gain problem
Use a no fill around line
test only
2nd pll lock detect
not used in production
TCVCXO Supply
mount reg to chass
Analog supply
Digital supply
Digital DVDD 3.3v
ANALOG 3.3 3.3v
11-12-04
Ten-Tec Inc.
1185 Dolly Parton Parkway
Sevierville, Tn 37862
Title
588SYN_mmic_REV
Size
C
Document Number
REV
A
Date: October 12, 2006
Sheet 1 of 1

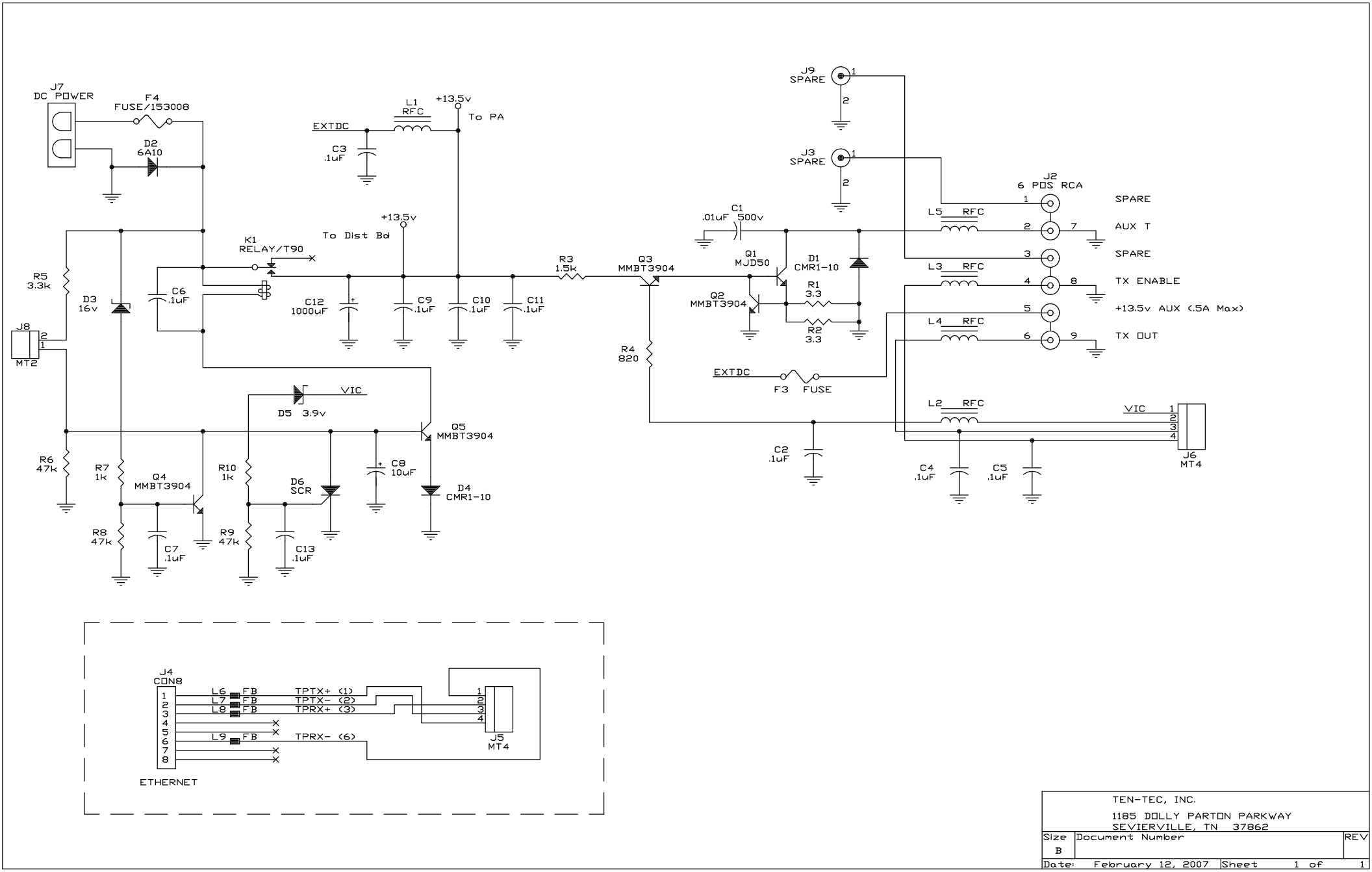

TEN-TEC, INC.
1185 DOLLY PARTON PARKWAY
SEVIERVILLE, TN 37862

Size	Document Number	REV
B		
Date: February 12, 2007	Sheet 1 of 1	

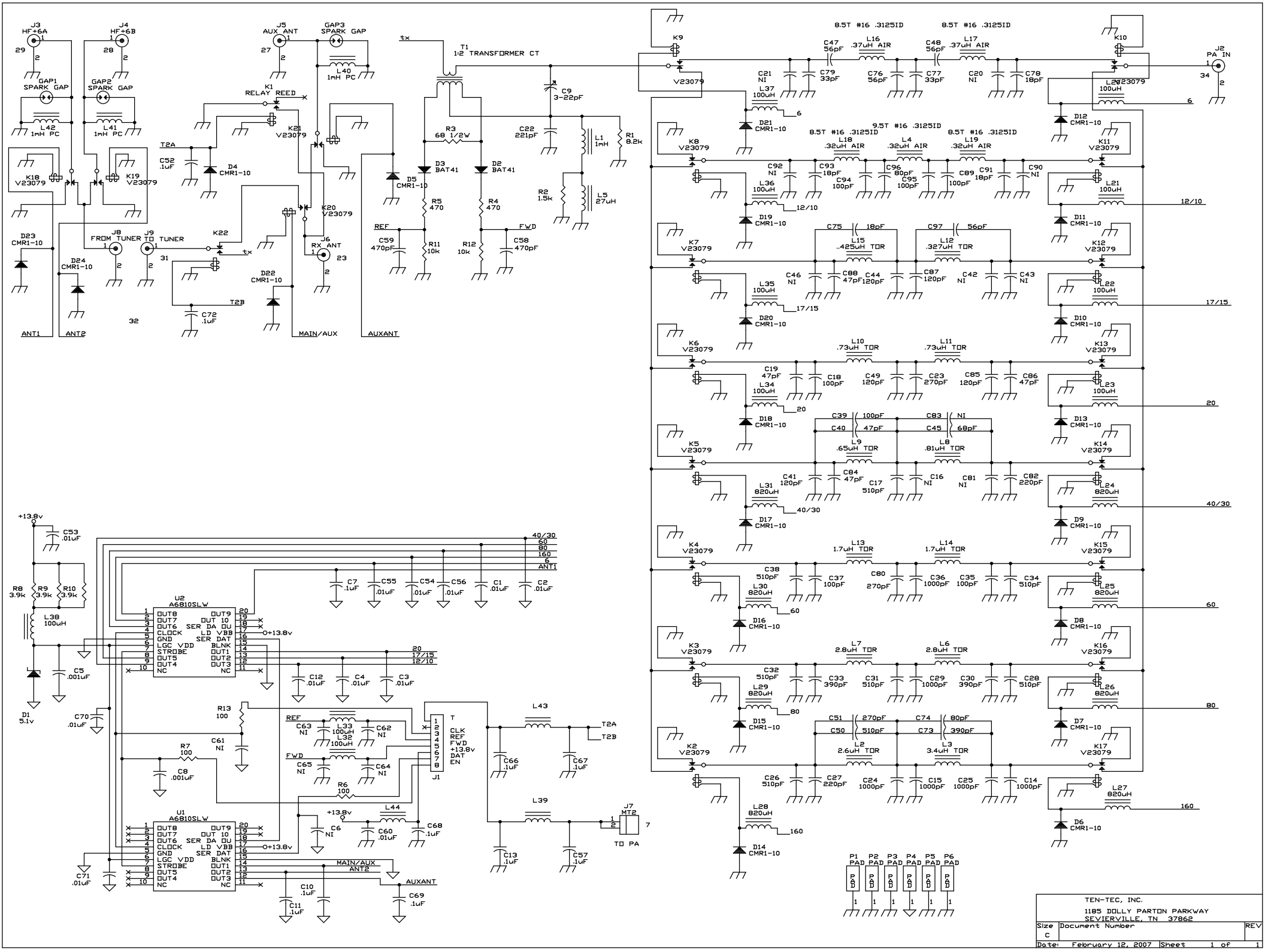
J3 HF+6A
J4 HF+6B
GAP1 SPARK GAP
GAP2 SPARK GAP
L42 1mH PC
L41 1mH PC
J5 AUX ANT
GAP3 SPARK GAP
L40 1mH PC
K1 RELAY REED
K21 V23079
K20 V23079
K22
K18 V23079
K19 V23079
J8 FROM TUNER
J9 TO TUNER
J6 RX ANT
D23 CMR1-10
D24 CMR1-10
D22 CMR1-10
D4 CMR1-10
C52 .1uF
C72 .1uF
T2A
T2B
tx
ANT1
ANT2
MAIN/AUX
AUXANT
T1 1:2 TRANSFORMER CT
R3 68 1/2W
D3 BAT41
D2 BAT41
D5 CMR1-10
R5 470
R4 470
R11 10k
R12 10k
C59 470pF
C58 470pF
REF
FWD
C9 3-22pF
C22 221pF
L1 1mH
R1 8.2k
R2 1.5k
L5 27uH
K9 V23079
K10 V23079
J2 PA IN
8.5T #16 .3125ID
9.5T #16 .3125ID
L16 .37uH AIR
L17 .37uH AIR
L18 .32uH AIR
L4 .32uH AIR
L19 .32uH AIR
L15 .425uH TDR
L12 .327uH TDR
L10 .73uH TDR
L11 .73uH TDR
L9 .65uH TDR
L8 .81uH TDR
L13 1.7uH TDR
L14 1.7uH TDR
L7 2.8uH TDR
L6 2.8uH TDR
L2 2.6uH TDR
L3 3.4uH TDR
40/30
60
80
160
6
ANT1
+13.8v
U2 A6810SLW
U1 A6810SLW
OUT8
OUT7
OUT6
CLOCK
GND
LGC VDD
STROBE
OUT5
OUT4
NC
OUT9
OUT 10
SER DA OU
LD VBB
SER DAT
BLNK
OUT1
OUT2
OUT3
J1
CLK
REF
FWD
+13.8v
DAT
EN
J7 MT2
TO PA
P1 PAD
P2 PAD
P3 PAD
P4 PAD
P5 PAD
P6 PAD
TEN-TEC, INC.
1185 DOLLY PARTON PARKWAY
SEVIERVILLE, TN 37862
Size C
Document Number
REV
Date: February 12, 2007
Sheet 1 of 1

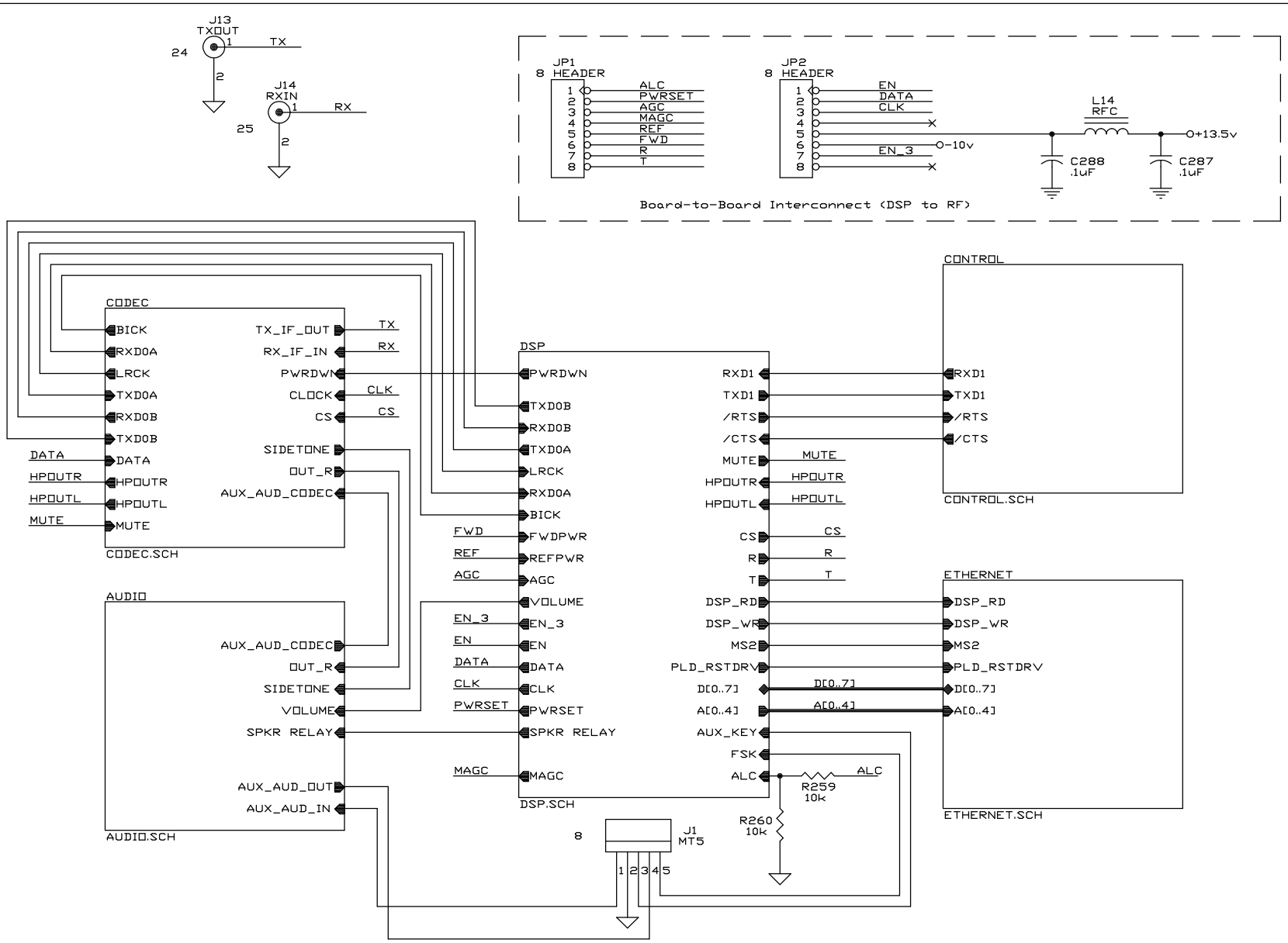

TEN-TEC, INC.
1185 DOLLY PARTON PARKWAY
SEVIERVILLE, TN 37862

Size	Document Number	REV
B	Model 588 DSP PCB	A
Date: April 17, 2006	Sheet 1 of 8	

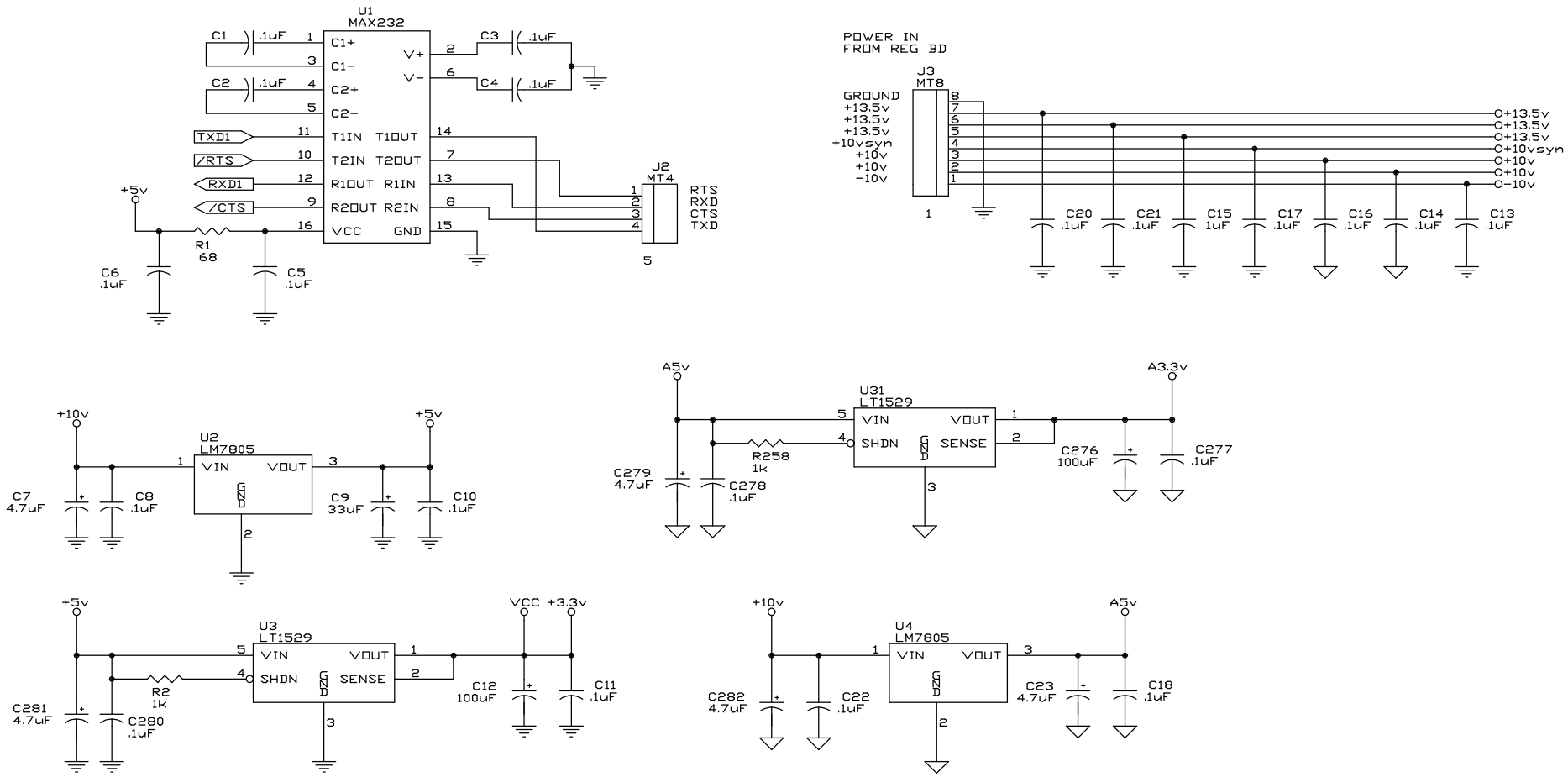

TEN-TEC, INC.

1185 DOLLY PARTON PARKWAY
SEVIERVILLE, TN 37862

Size	Document Number	REV
B	Model 588 DSP PCB (CONTROL)	A

Date: November 10, 2005 Sheet 2 of 8

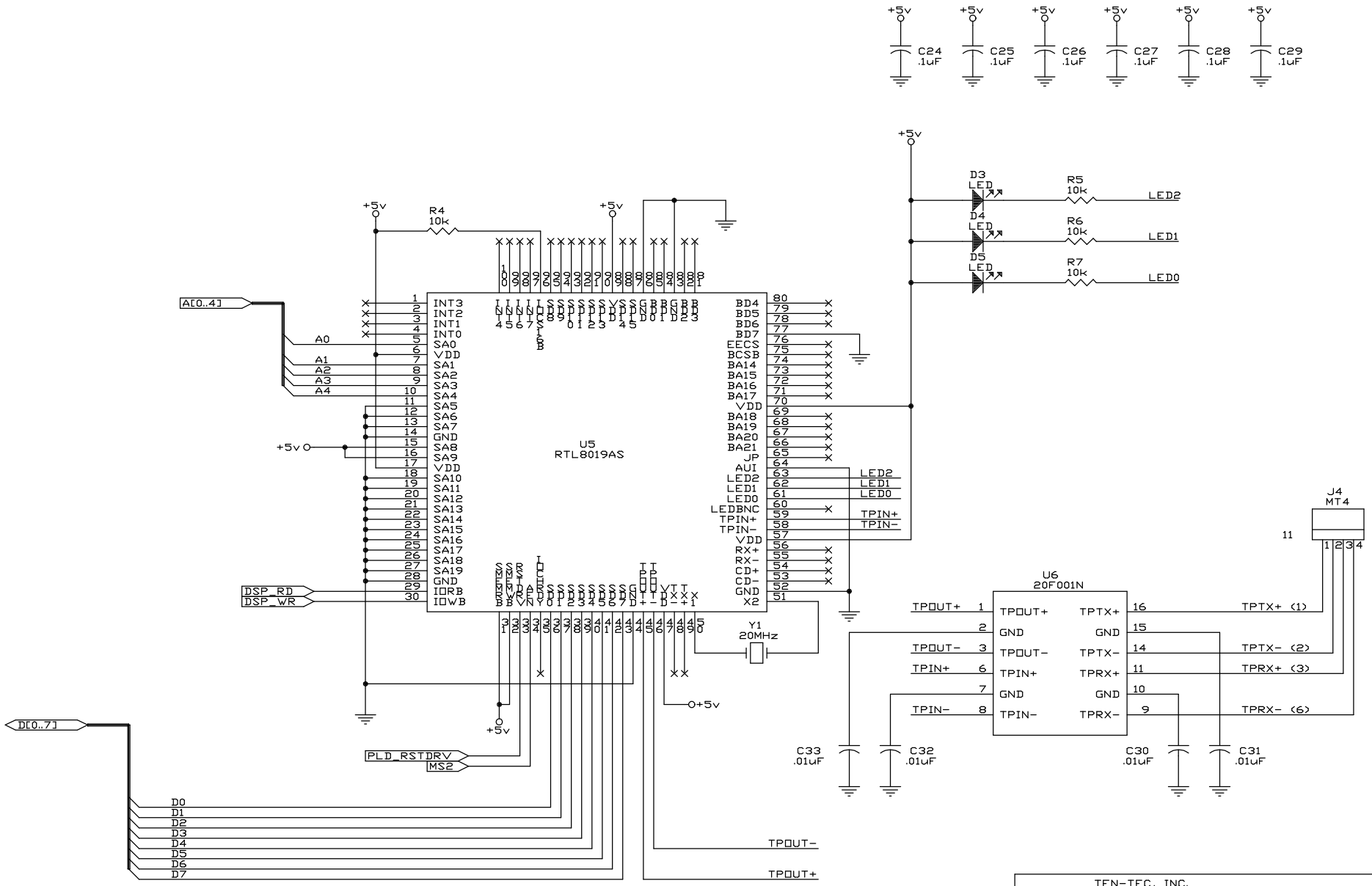

TEN-TEC, INC.
1185 DOLLY PARTON PARKWAY
SEVIERVILLE, TN 37862

Size	Document Number	REV
B	Model 588 DSP PCB (ETHERNET)	A
Date: November 10, 2005	Sheet 3 of 8	

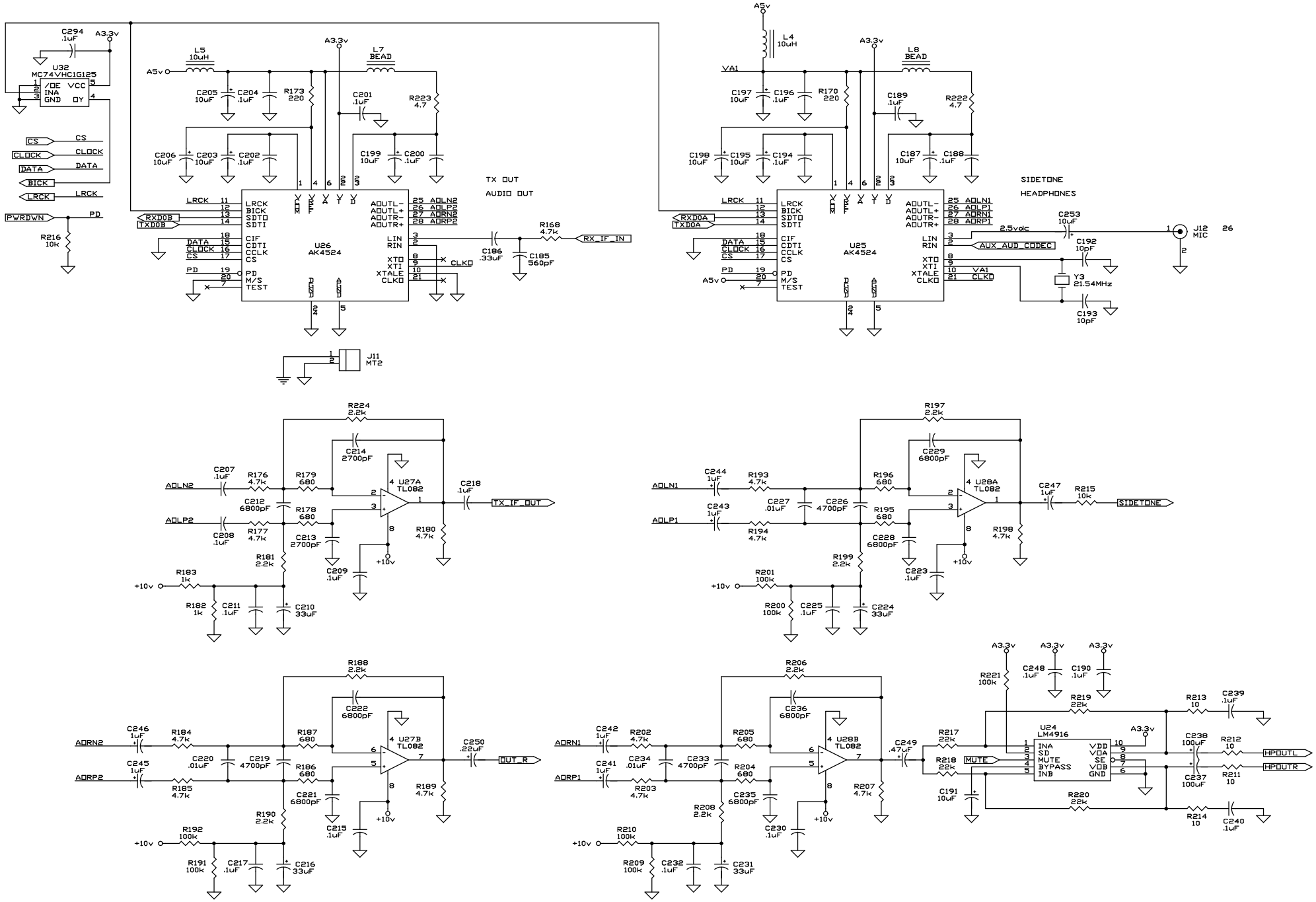

TEN-TEC, INC. 1185 DOLLY PARTON PARKWAY SEVIERVILLE, TN 37862		
Size C	Document Number Model 588 DSP PCB (CODEC)	REV A
Date: January 9, 2007	Sheet 4 of 8	

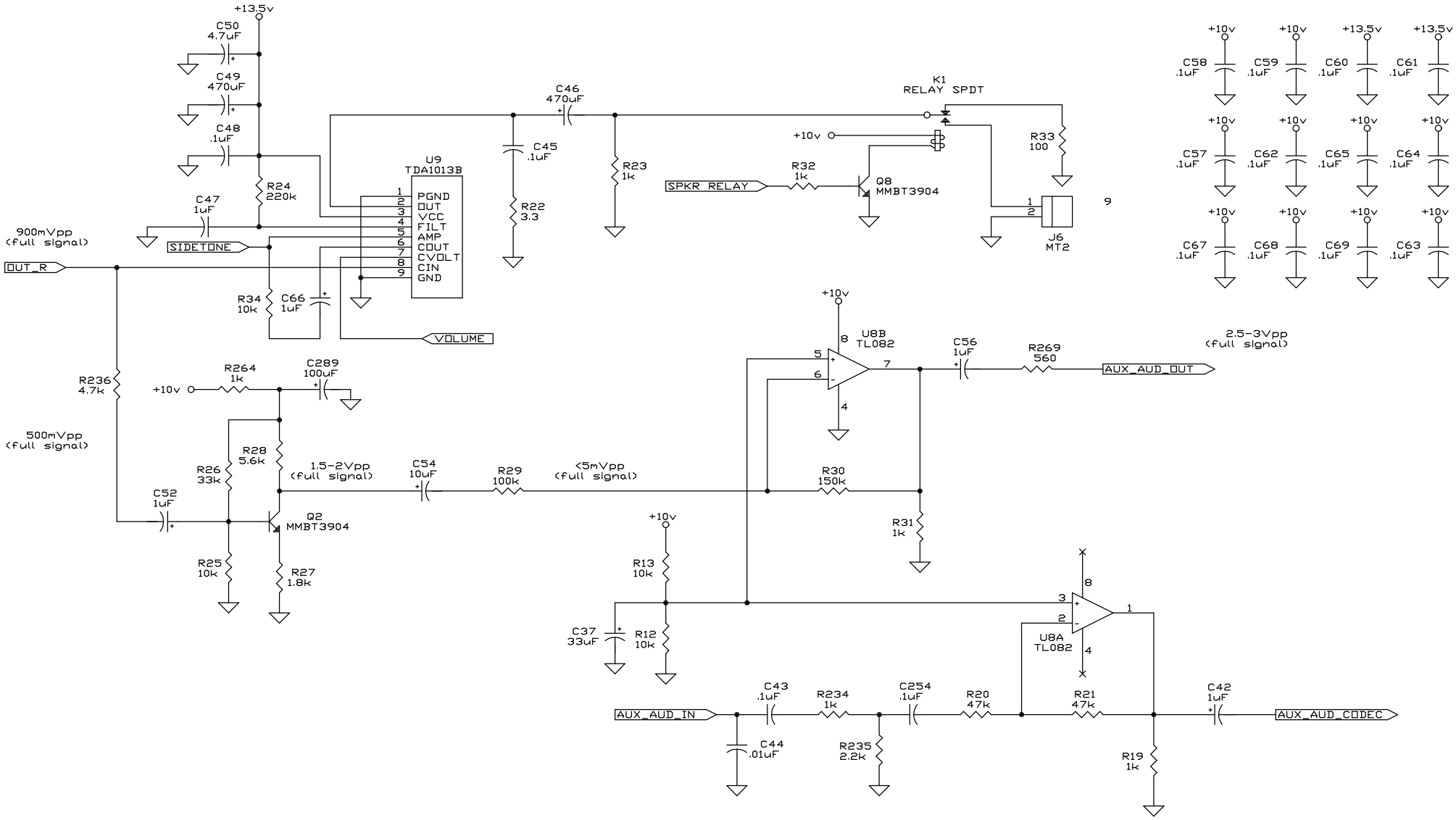

TEN-TEC, INC.
1185 DOLLY PARTON PARKWAY
SEVIERVILLE, TN 37862

Size	Document Number	REV
B	Model 588 DSP PCB (AUDIO)	A
Date: February 2, 2007	Sheet 5 of 8	

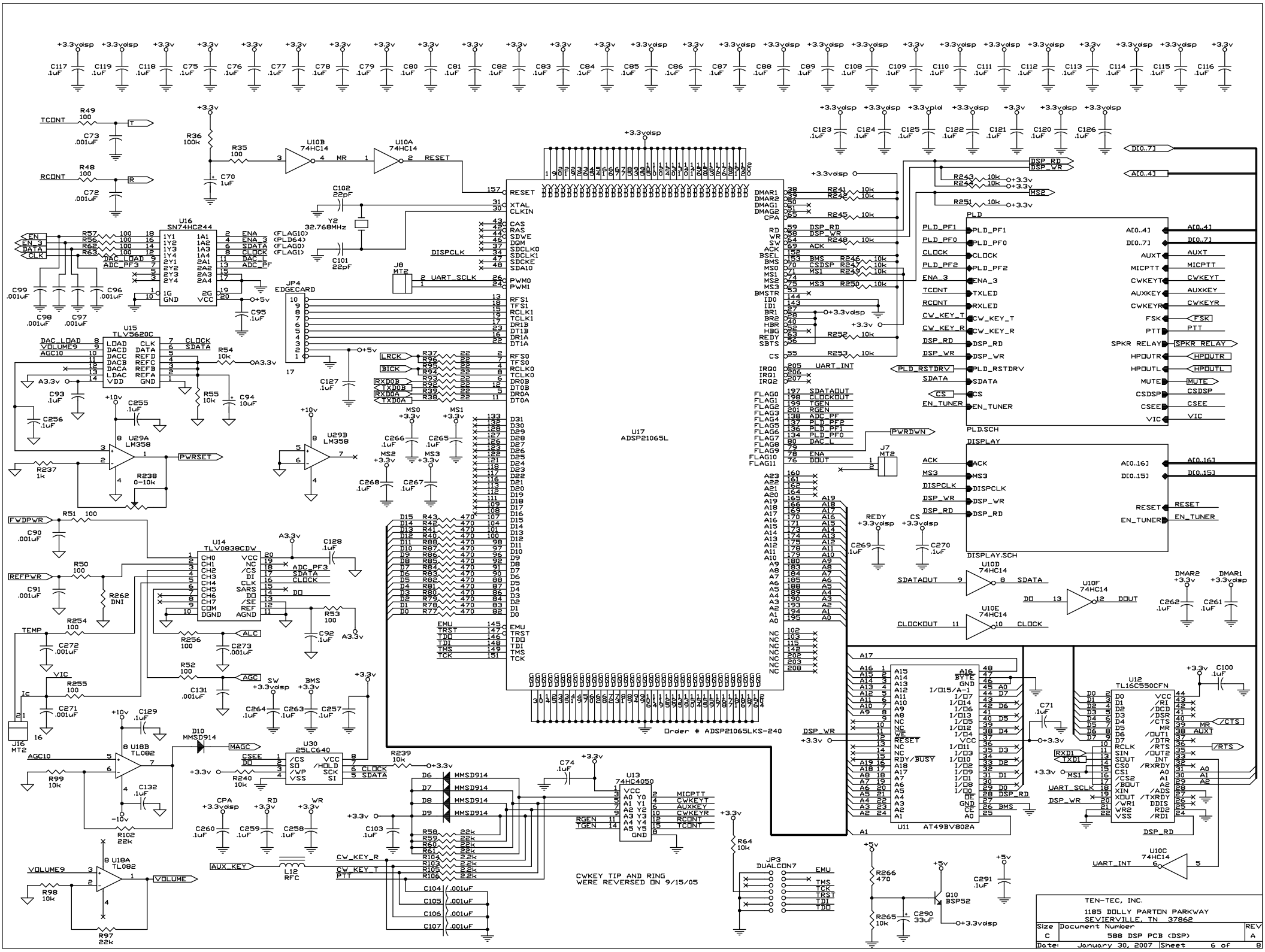
U17
ADSP21065L
U16
SN74HC244
U15
TLV5620C
U14
TLV0838CDW
U29A
LM358
U29B
LM358
U10B
74HC14
U10A
74HC14
U10D
74HC14
U10E
74HC14
U10F
74HC14
U10C
74HC14
U18B
TL082
U18A
TL082
U30
25LC640
U13
74HC4050
U12
TL16C550CFN
U11
AT49BV802A
JP4
EDGECARD
JP3
DUALCON7
J8
MT2
J7
MT2
J16
MT2
Y2
32.768MHz
L12
RFC
Q10
BSP52
PLD
PLD.SCH
DISPLAY
DISPLAY.SCH
Order # ADSP21065LKS-240
CWKEY TIP AND RING
WERE REVERSED ON 9/15/05
TEN-TEC, INC.
1185 DOLLY PARTON PARKWAY
SEVIERVILLE, TN 37862
Size C
Document Number
588 DSP PCB (DSP)
REV A
Date: January 30, 2007
Sheet 6 of 8

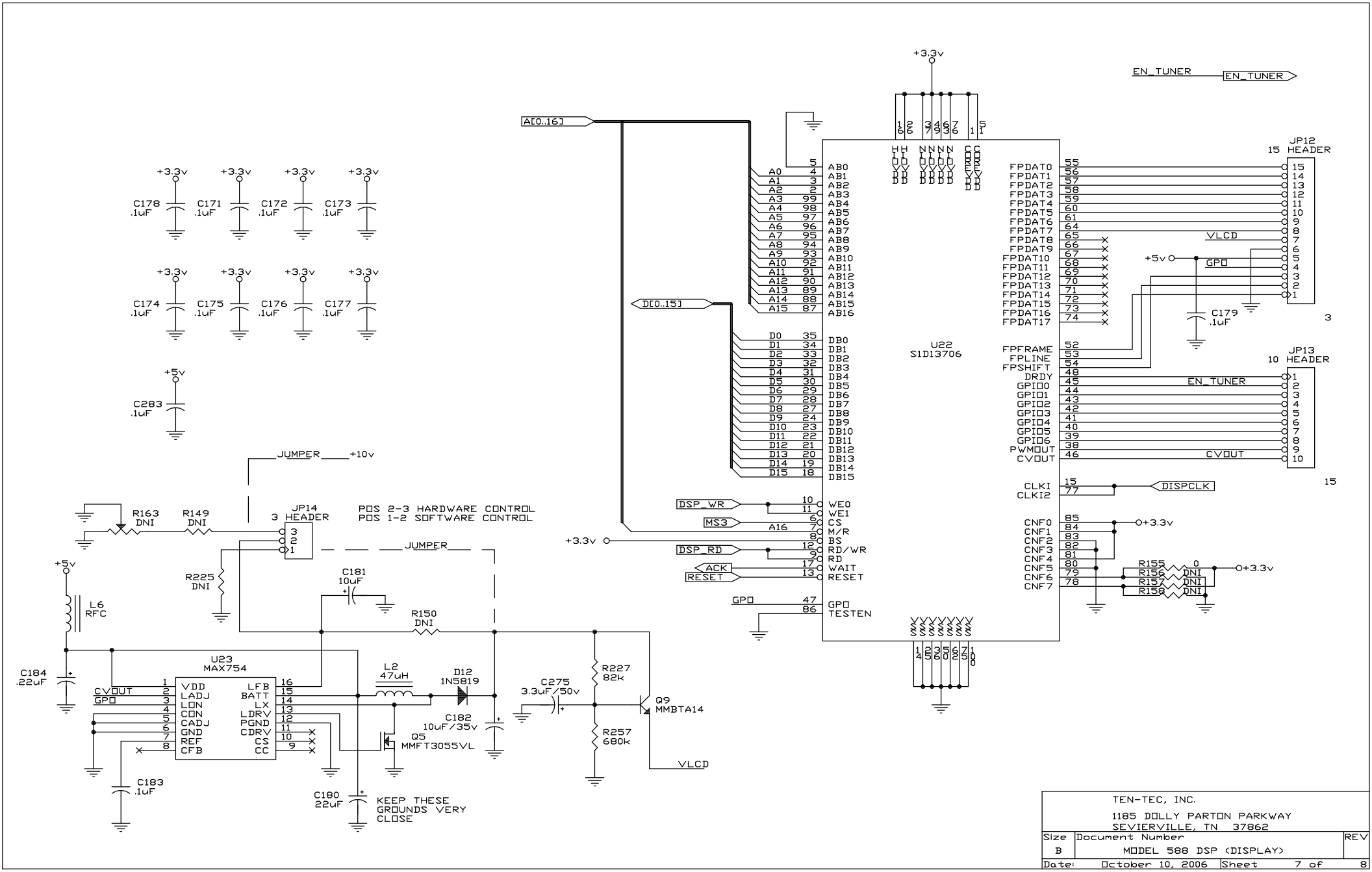

TEN-TEC, INC.
1185 DOLLY PARTON PARKWAY
SEVIERVILLE, TN 37862

Size	Document Number	REV
B	MODEL 588 DSP (DISPLAY)	
Date: October 10, 2006	Sheet 7 of 8	

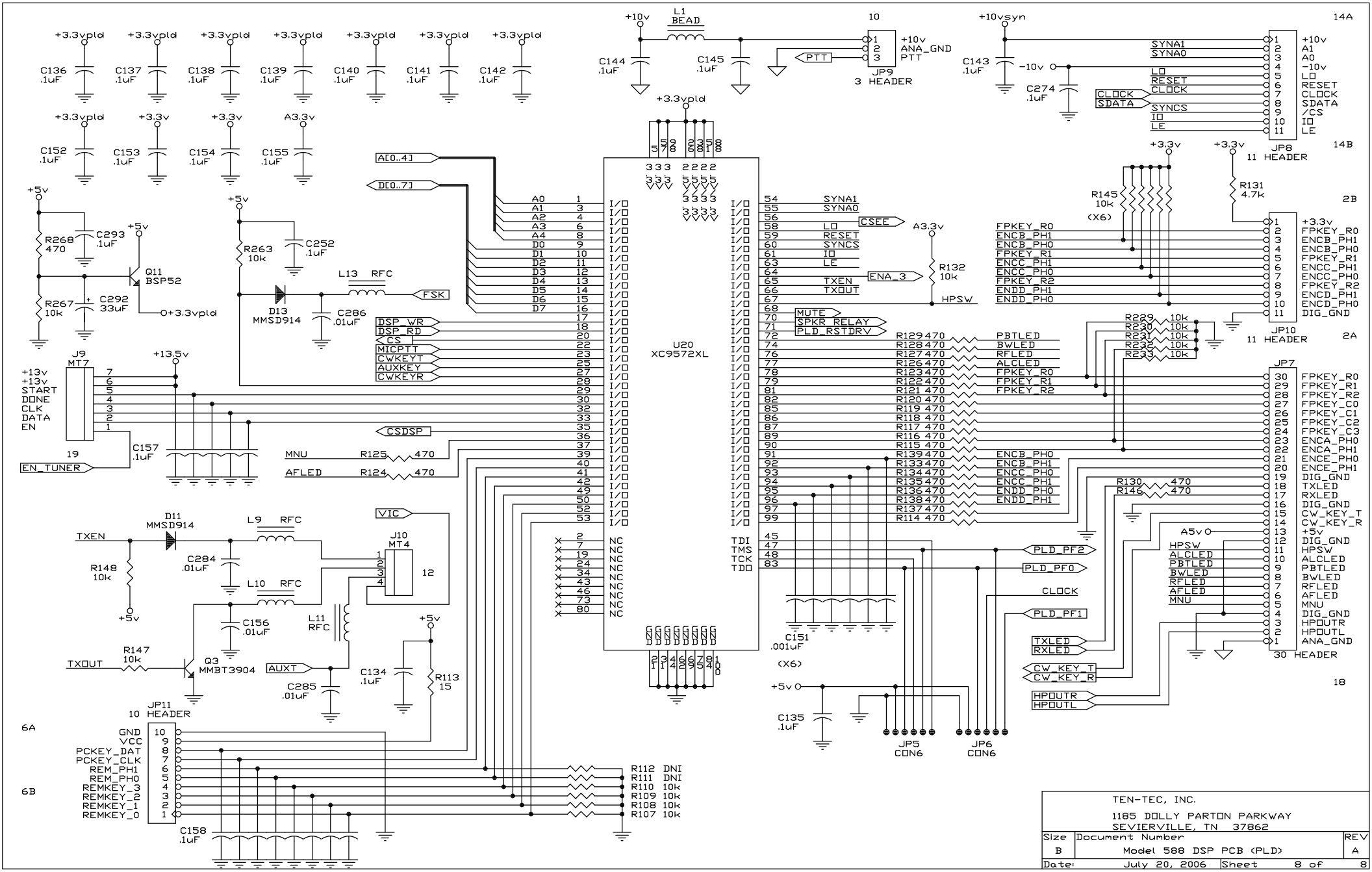
U20
XC9572XL
JP9
3 HEADER
JP8
11 HEADER
JP10
11 HEADER
JP7
30 HEADER
JP11
10 HEADER
J9
MT7
J10
MT4
JP5
CON6
JP6
CON6
Q11
BSP52
Q3
MMBT3904
D13
MMSD914
D11
MMSD914
L1
BEAD
L13 RFC
L9 RFC
L10 RFC
L11
RFC
TEN-TEC, INC.
1185 DOLLY PARTON PARKWAY
SEVIERVILLE, TN 37862
Size
B
Document Number
Model 588 DSP PCB (PLD)
REV
A
Date:
July 20, 2006
Sheet
8 of
8

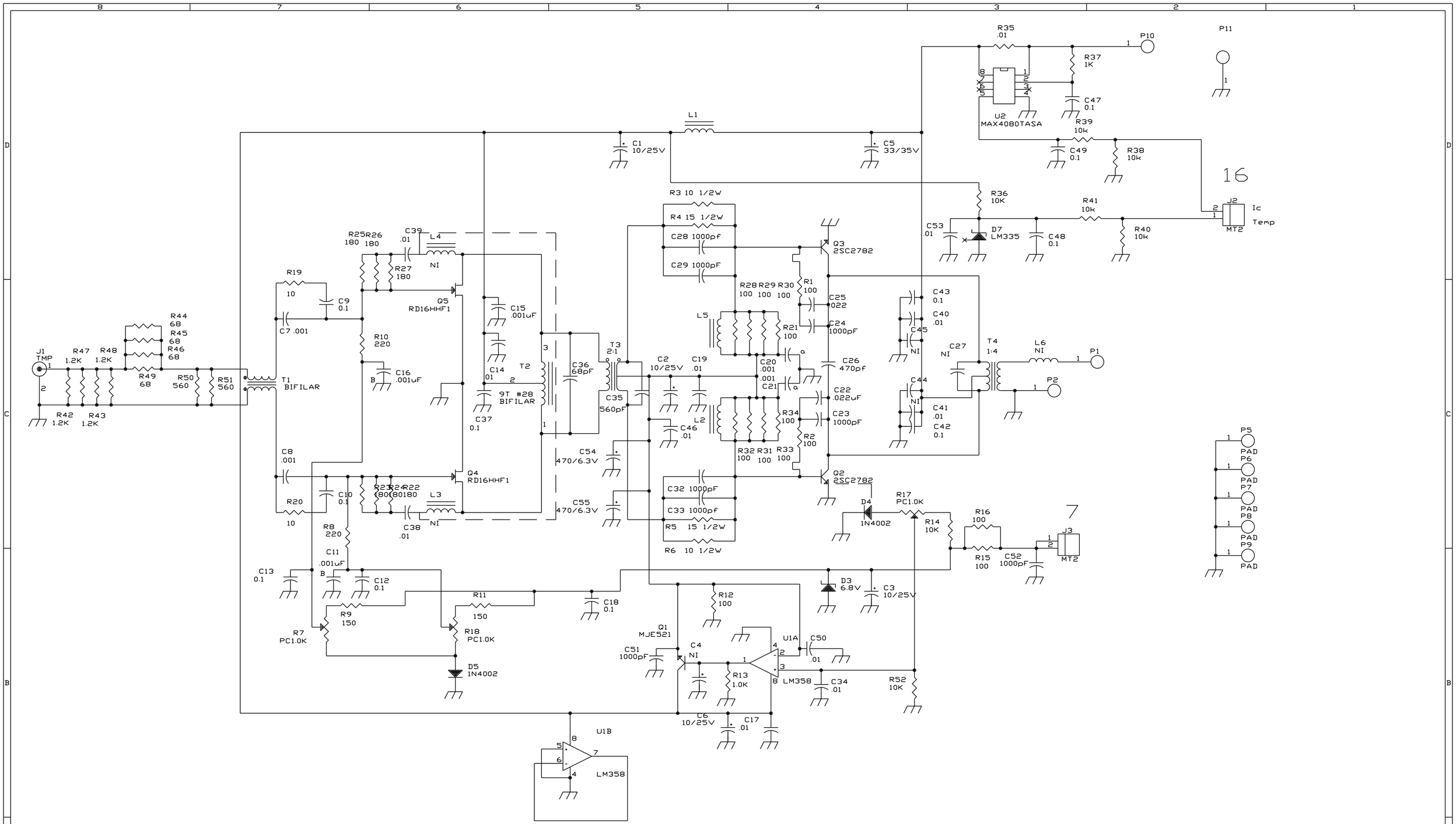

Ten-Tec, Inc.
1185 Dolly Parton Pkwy.
Sevierville, TN 37862

Title		
HF + 6M		
Size C	Document Number 78289	REV D
Date: August 9, 2007	Sheet 1 of 1	

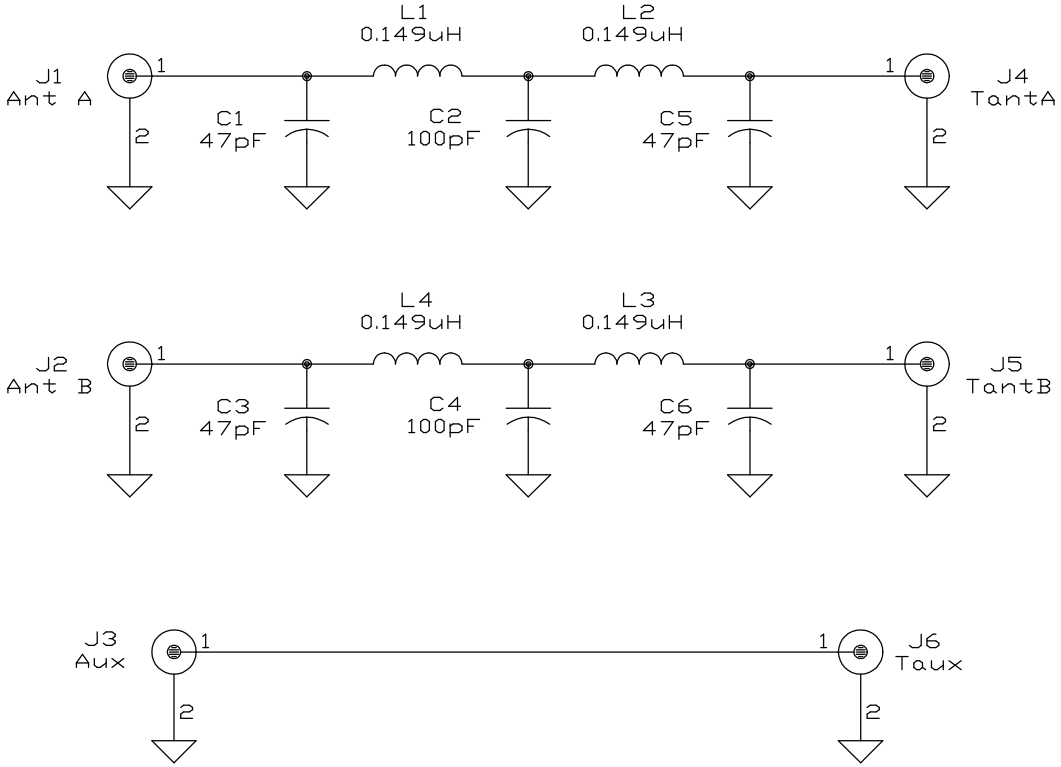

Size A	Document Number	REV
Date: January 2, 2007	Sheet 1 of 1	

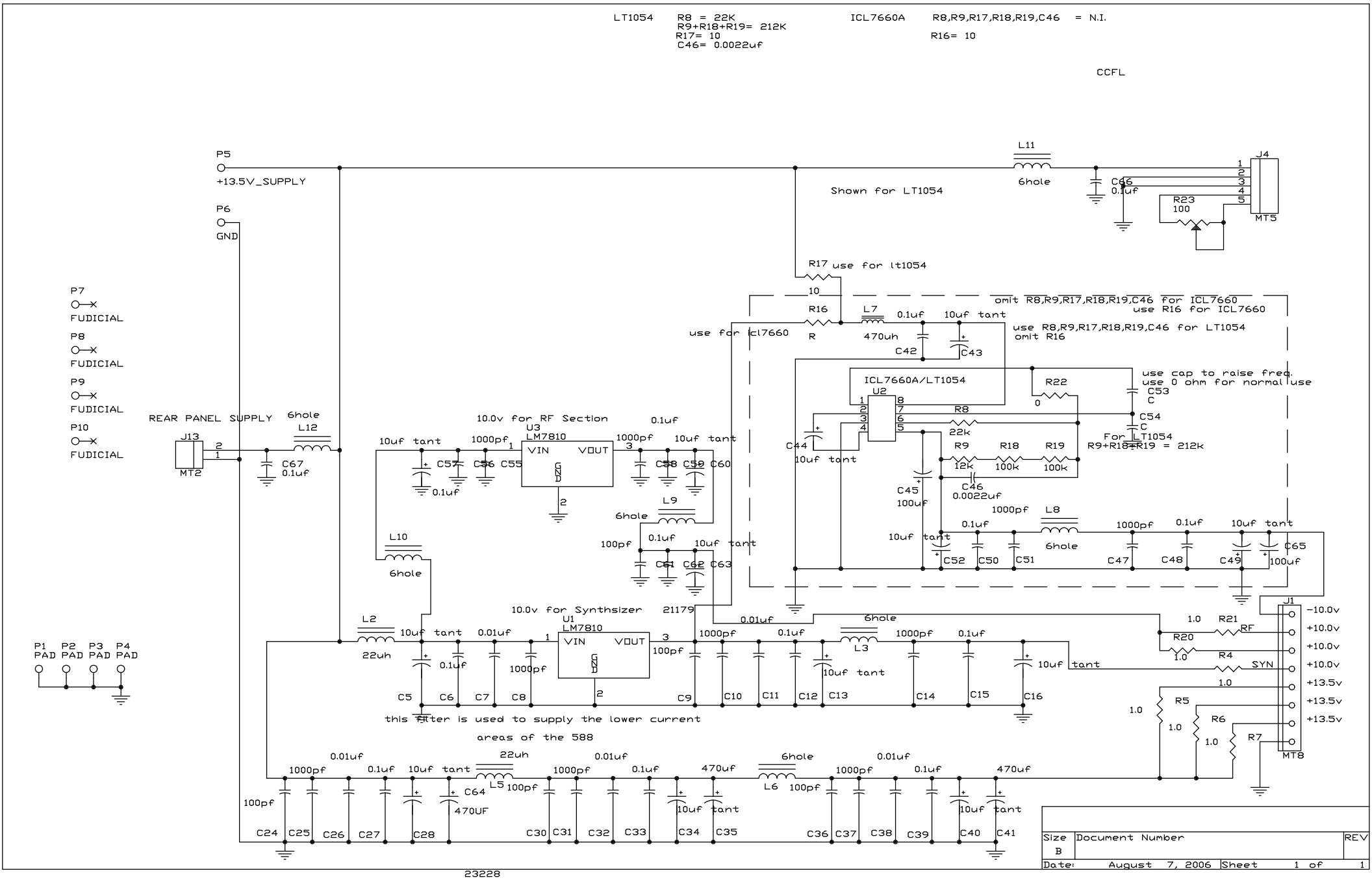
LT1054 R8 = 22K
R9+R18+R19= 212K
R17= 10
C46= 0.0022uf
ICL7660A R8,R9,R17,R18,R19,C46 = N.I.
R16= 10
CCFL
P5
+13.5V_SUPPLY
P6
GND
P7
FUDICIAL
P8
FUDICIAL
P9
FUDICIAL
P10
FUDICIAL
P1 PAD
P2 PAD
P3 PAD
P4 PAD
REAR PANEL SUPPLY
J13
MT2
C67 0.1uf
6hole L12
10uf tant
1000pf
C57 C56 C55
0.1uf
10.0v for RF Section
U3 LM7810
VIN VOUT
GND
1000pf
10uf tant
C58 C59 C60
0.1uf
L9 6hole
100pf
0.1uf
10uf tant
C61 C62 C63
L10 6hole
L2 22uh
10uf tant
0.01uf
1000pf
0.1uf
C5 C6 C7 C8
10.0v for Synthsizer
U1 LM7810
VIN VOUT
GND
21179
100pf
C9 C10 C11 C12 C13 C14 C15 C16
0.01uf
6hole L3
1000pf
0.1uf
10uf tant
this filter is used to supply the lower current areas of the 588
0.01uf
1000pf
0.1uf
10uf tant
22uh L5
C64 470UF
100pf
C24 C25 C26 C27 C28
1000pf
0.01uf
0.1uf
470uf
C30 C31 C32 C33 C34 C35
6hole L6
100pf
1000pf
0.01uf
0.1uf
470uf
C36 C37 C38 C39 C40 C41
L11 6hole
C66 0.1uf
Shown for LT1054
J4
MT5
R23 100
R17 use for lt1054
10
R16 R
L7 470uh
0.1uf
10uf tant
C42
C43
use for icl7660
omit R8,R9,R17,R18,R19,C46 for ICL7660
use R16 for ICL7660
use R8,R9,R17,R18,R19,C46 for LT1054
omit R16
ICL7660A/LT1054
U2
R22 0
use cap to raise freq.
use 0 ohm for normal use
C53 C
C54 C
For LT1054
R9+R18+R19 = 212k
R8 22k
C44 10uf tant
R9 12k
R18 100k
R19 100k
C45 100uf
C46 0.0022uf
1000pf
L8 6hole
0.1uf
10uf tant
C52 C50 C51
1000pf
0.1uf
10uf tant
C47 C48 C49
C65 100uf
J1
MT8
-10.0v
+10.0v
+10.0v
+10.0v
+13.5v
+13.5v
+13.5v
R21 RF
R20
R4 SYN
R5
R6
R7
1.0
Size B
Document Number
REV
Date: August 7, 2006
Sheet 1 of 1
23228

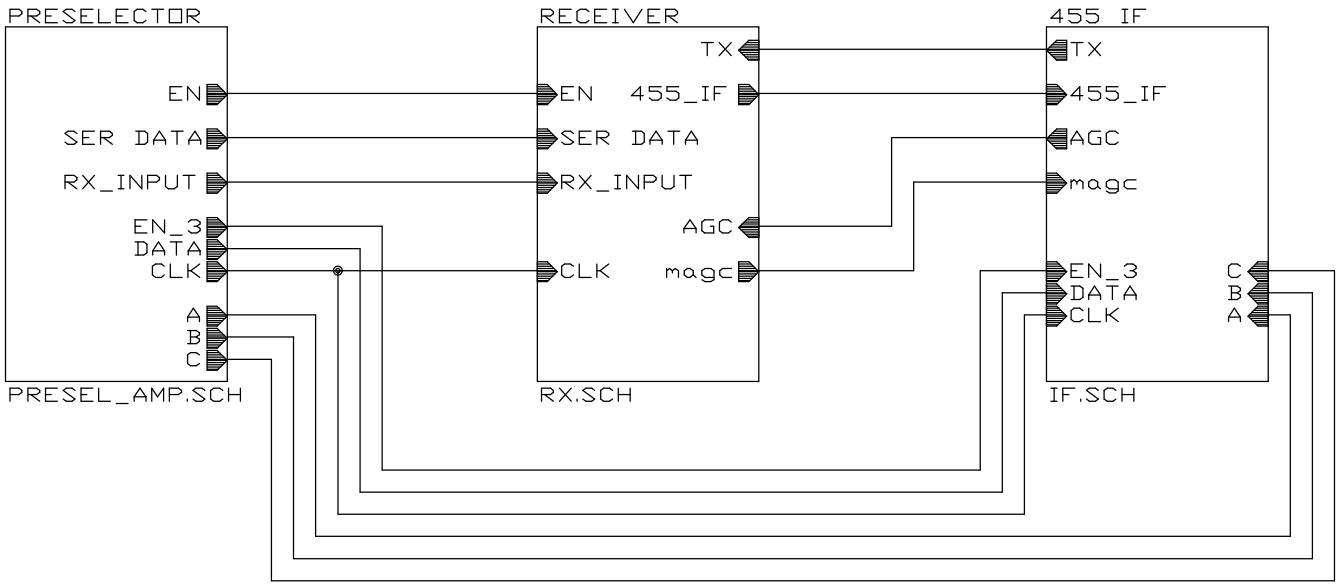

TEN-TEC, INC

1185 DOLLY PARTON PKY
SEVIERVILLE, TN 37862

Title

588

Size	Document Number	REV
A		H

Date: July 6, 2006 Sheet 1 of 4

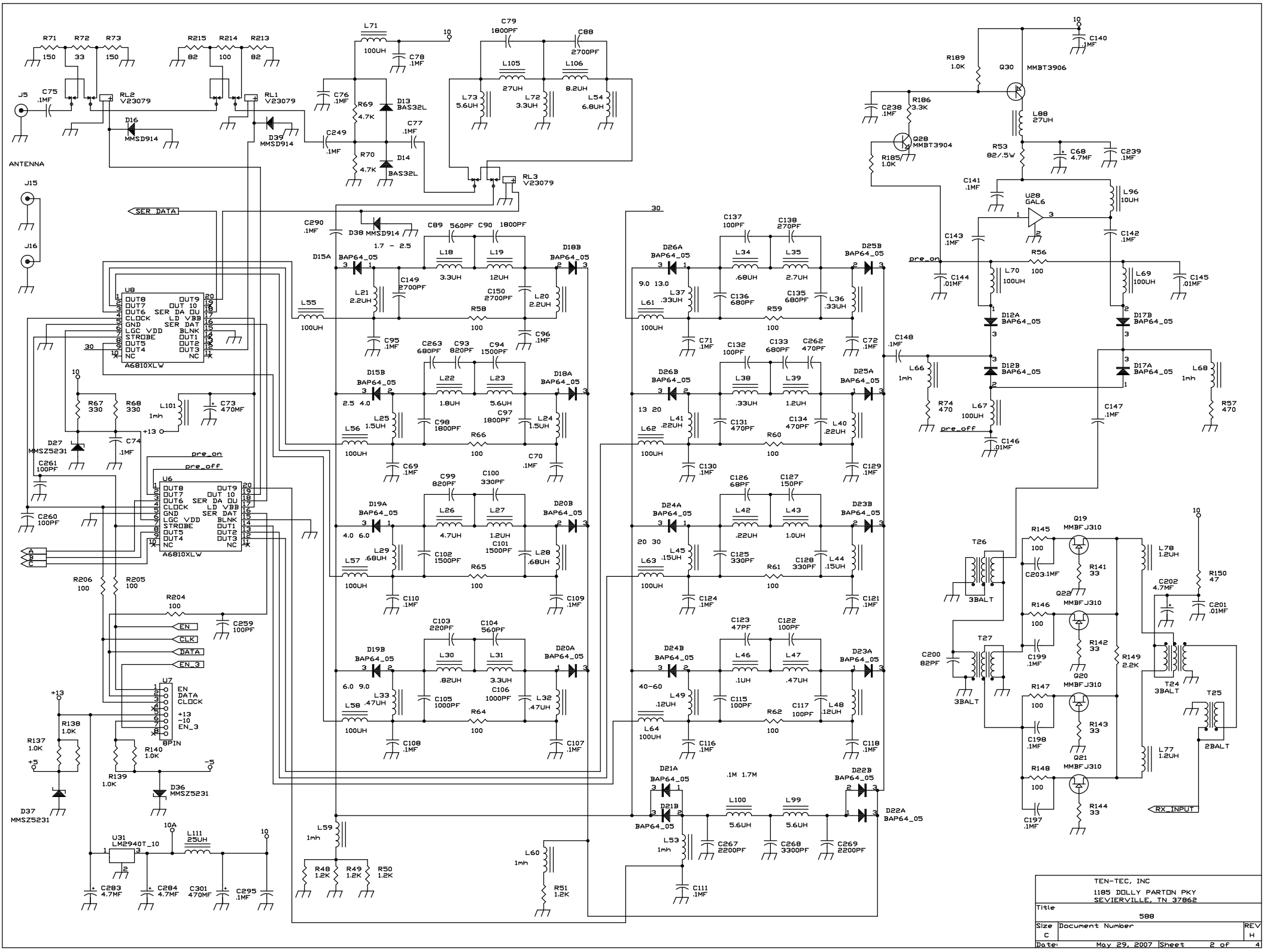
TEN-TEC, INC
1185 DOLLY PARTON PKY
SEVIERVILLE, TN 37862
Title
588
Size C
Document Number
REV H
Date: May 29, 2007
Sheet 2 of 4
ANTENNA
SER_DATA
RX_INPUT
pre_on
pre_off
EN
CLK
DATA
EN_3
U8 A6810XLW
U6 A6810XLW
U7 8PIN
U31 LM2940T_10
U28 GAL6
Q30 MMBT3906
Q28 MMBT3904
Q19 MMBFJ310
Q22 MMBFJ310
Q20 MMBFJ310
Q21 MMBFJ310
RL1 V23079
RL2 V23079
RL3 V23079
T24 3BALT
T25 2BALT
T26 3BALT
T27 3BALT

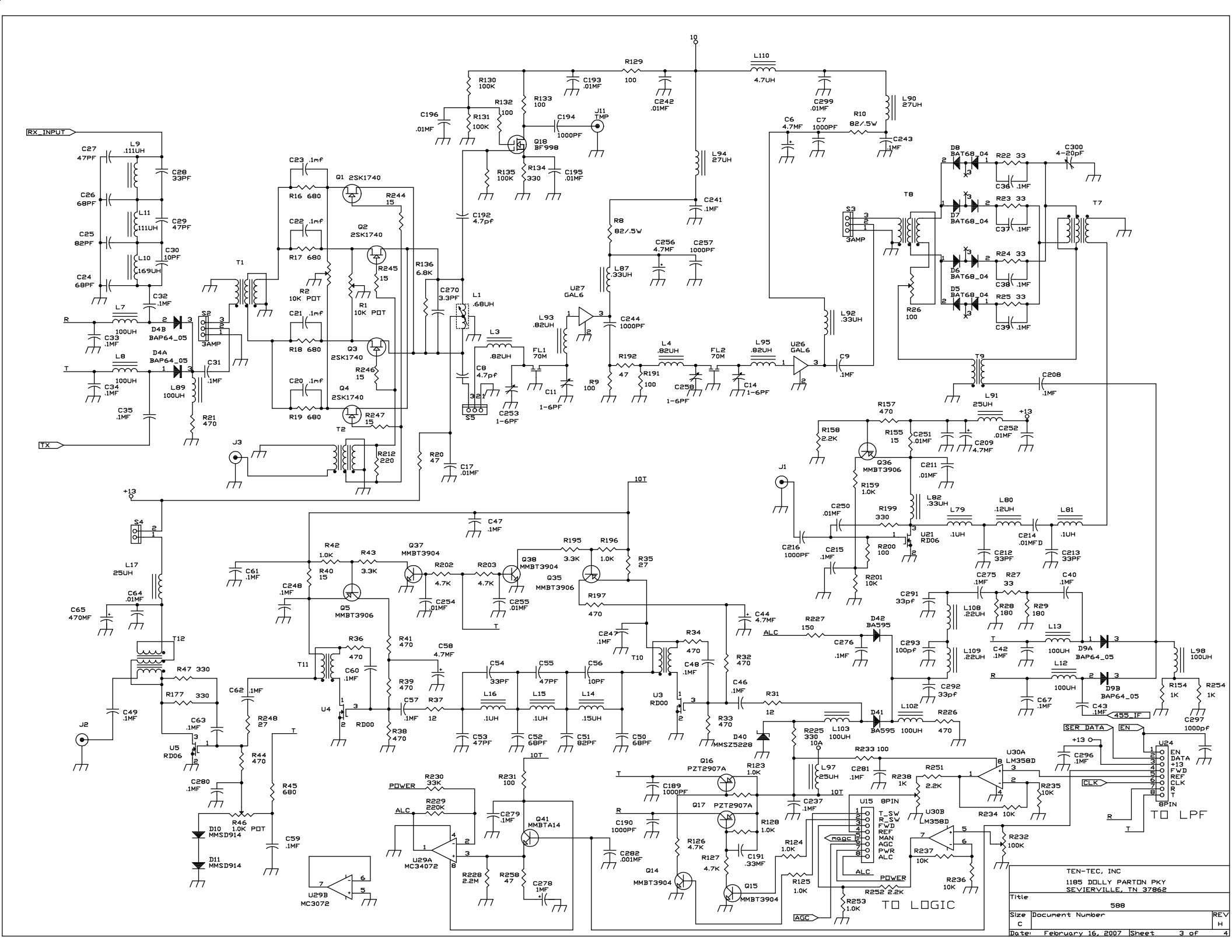
RX_INPUT
TX
TO LPF
TO LOGIC
TEN-TEC, INC
1185 DOLLY PARTON PKY
SEVIERVILLE, TN 37862
Title
588
Size C
Document Number
REV H
Date: February 16, 2007
Sheet 3 of 4

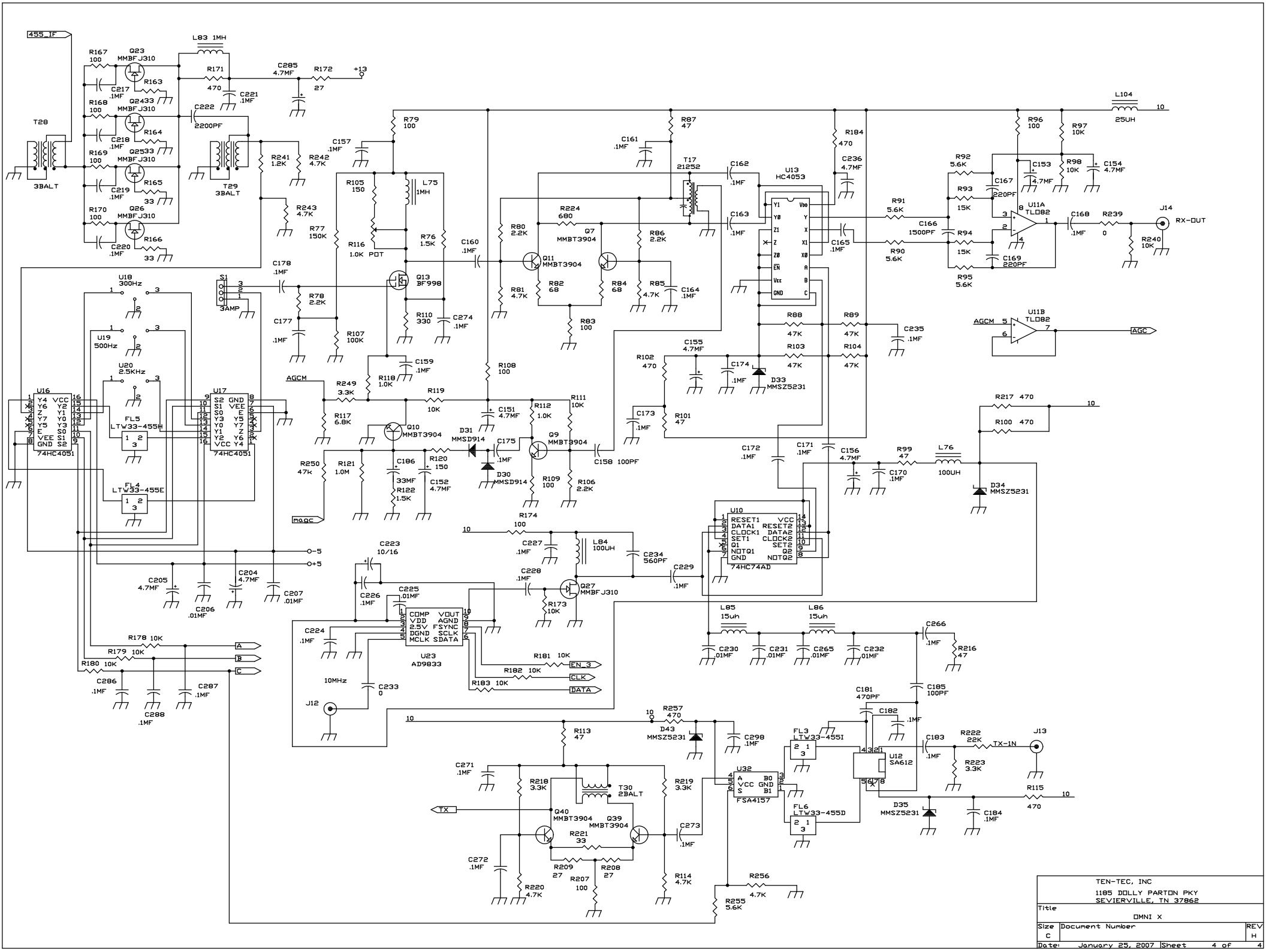
455_IF
L83 1MH
R167 100
Q23 MMBFJ310
R163 33
C217 .1MF
R168 100
Q24 MMBFJ310
R164 33
C218 .1MF
R169 100
Q25 MMBFJ310
R165 33
C219 .1MF
R170 100
Q26 MMBFJ310
R166 33
C220 .1MF
T28 3BALT
R171 470
C221 .1MF
C222 2200PF
C285 4.7MF
R172 27
+13
T29 3BALT
R241 1.2K
R242 4.7K
R243 4.7K
C157 .1MF
R79 100
R105 150
L75 1MH
R116 1.0K POT
R76 1.5K
R77 150K
C160 .1MF
C178 .1MF
R78 2.2K
C177 .1MF
Q13 BF998
R110 330
C274 .1MF
R107 100K
C159 .1MF
R118 1.0K
R108 100
S1 3AMP
U18 300Hz
U19 500Hz
U20 2.5KHz
U16 74HC4051
U17 74HC4051
FL5 LTW33-455H
FL4 LTW33-455E
AGCM
R249 3.3K
R117 6.8K
R119 10K
Q10 MMBT3904
D31 MMSD914
C175 .1MF
D30 MMSD914
C151 4.7MF
R112 1.0K
R111 10K
Q9 MMBT3904
C158 100PF
R109 100
R106 2.2K
R250 47K
R121 1.0M
C186 33MF
R122 1.5K
R120 150
C152 4.7MF
mAGC
R174 100
C227 .1MF
L84 100UH
C234 560PF
C229 .1MF
C228 .1MF
Q27 MMBFJ310
R173 10K
C223 10/16
C226 .1MF
C225 .01MF
C224 .1MF
U23 AD9833
COMP VOUT
VDD AGND
2.5V FSYNC
DGND SCLK
MCLK SDATA
R181 10K
R182 10K
R183 10K
EN_3
CLK
DATA
10MHz
C233 0
J12
C205 4.7MF
C206 .01MF
C204 4.7MF
C207 .01MF
-5
+5
R178 10K
R179 10K
R180 10K
A
B
C
C286 .1MF
C288 .1MF
C287 .1MF
R87 47
C161 .1MF
T17 21252
C162 .1MF
C163 .1MF
R224 680
Q7 MMBT3904
R80 2.2K
Q11 MMBT3904
R81 4.7K
R82 68
R84 68
R86 2.2K
R85 4.7K
C164 .1MF
R83 100
U13 HC4053
R88 47K
R89 47K
R103 47K
R104 47K
C235 .1MF
R102 470
C155 4.7MF
C174 .1MF
D33 MMSZ5231
C173 .1MF
R101 47
C172 .1MF
C171 .1MF
C156 4.7MF
C170 .1MF
R99 47
L76 100UH
D34 MMSZ5231
R217 470
R100 470
U10 74HC74AD
RESET1 VCC
DATA1 RESET2
CLOCK1 DATA2
SET1 CLOCK2
Q1 SET2
NOTQ1 Q2
GND NOTQ2
L85 15uh
L86 15uh
C230 .01MF
C231 .01MF
C265 .01MF
C232 .01MF
C266 .1MF
R216 47
C185 100PF
C181 470PF
C182 .1MF
R257 470
D43 MMSZ5231
C298 .1MF
R113 47
C271 .1MF
R218 3.3K
T30 2BALT
R219 3.3K
TX
Q40 MMBT3904
Q39 MMBT3904
R221 33
C273 .1MF
C272 .1MF
R209 27
R208 27
R207 100
R220 4.7K
R114 4.7K
U32 FSA4157
A B0
VCC GND
S B1
R256 4.7K
R255 5.6K
FL3 LTW33-455I
FL6 LTW33-455D
U12 SA612
C183 .1MF
R222 22K
TX-IN
J13
R223 3.3K
R115 470
D35 MMSZ5231
C184 .1MF
L104 25UH
R96 100
R97 10K
R92 5.6K
R93 15K
C167 220PF
C153 4.7MF
R98 10K
C154 4.7MF
U11A TL082
R91 5.6K
R90 5.6K
C166 1500PF
R94 15K
R95 5.6K
C169 220PF
C168 .1MF
R239 0
J14 RX-OUT
R240 10K
U11B TL082
AGC
TEN-TEC, INC
1185 DOLLY PARTON PKY
SEVIERVILLE, TN 37862
Title
OMNI X
Size C
Document Number
REV H
Date: January 25, 2007
Sheet 4 of 4

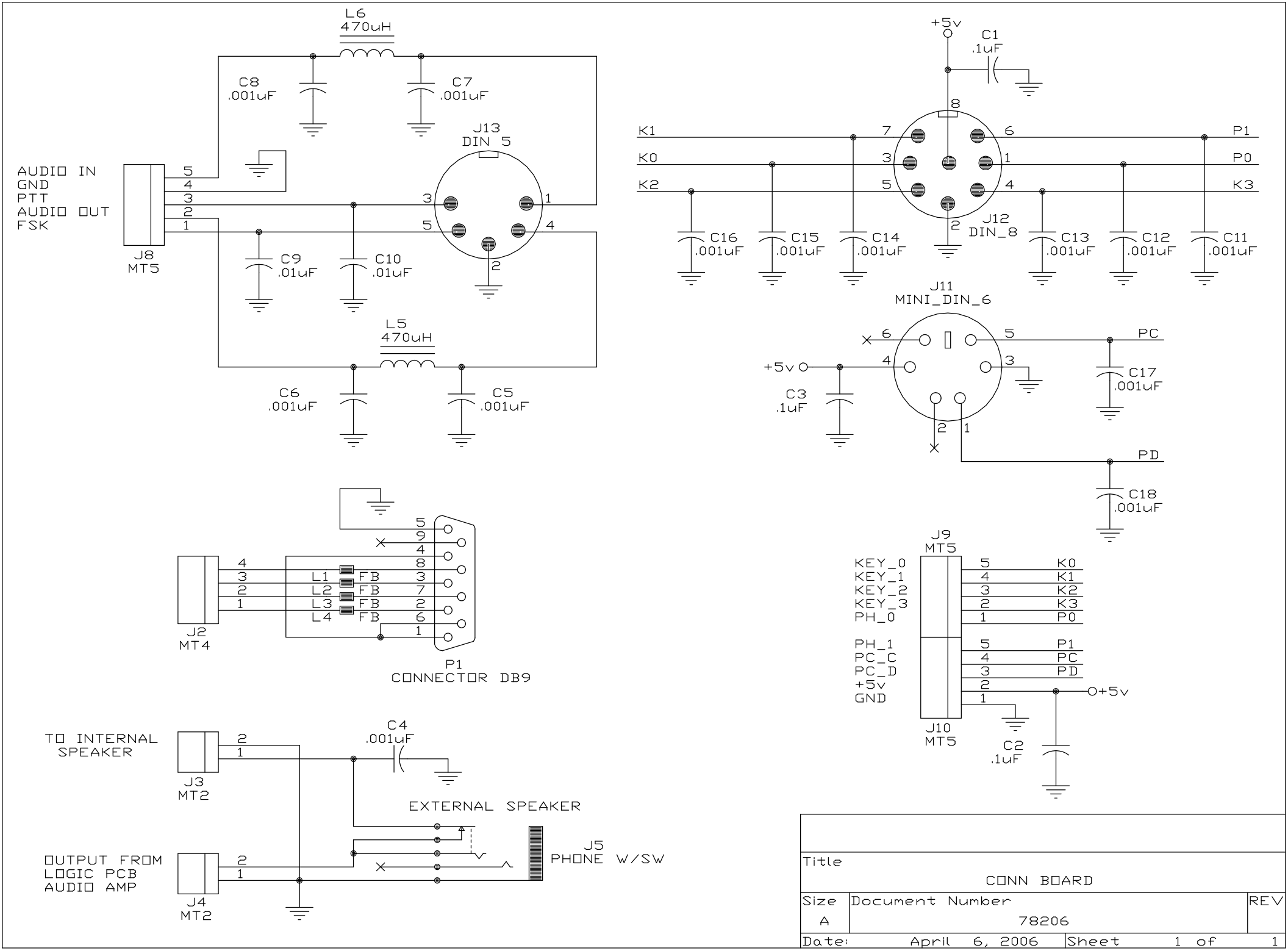
L6
470uH
C8
.001uF
C7
.001uF
J13
DIN 5
AUDIO IN
GND
PTT
AUDIO OUT
FSK
J8
MT5
C9
.01uF
C10
.01uF
L5
470uH
C6
.001uF
C5
.001uF
+5v
C1
.1uF
K1
K0
K2
P1
P0
K3
J12
DIN_8
C16
.001uF
C15
.001uF
C14
.001uF
C13
.001uF
C12
.001uF
C11
.001uF
J11
MINI_DIN_6
PC
+5v
C3
.1uF
C17
.001uF
PD
C18
.001uF
J2
MT4
L1 FB
L2 FB
L3 FB
L4 FB
P1
CONNECTOR DB9
J9
MT5
KEY_0
KEY_1
KEY_2
KEY_3
PH_0
PH_1
PC_C
PC_D
+5v
GND
J10
MT5
C2
.1uF
TO INTERNAL
SPEAKER
J3
MT2
C4
.001uF
EXTERNAL SPEAKER
J5
PHONE W/SW
OUTPUT FROM
LOGIC PCB
AUDIO AMP
J4
MT2
Title
CONN BOARD
Size
A
Document Number
78206
REV
Date: April 6, 2006
Sheet 1 of 1

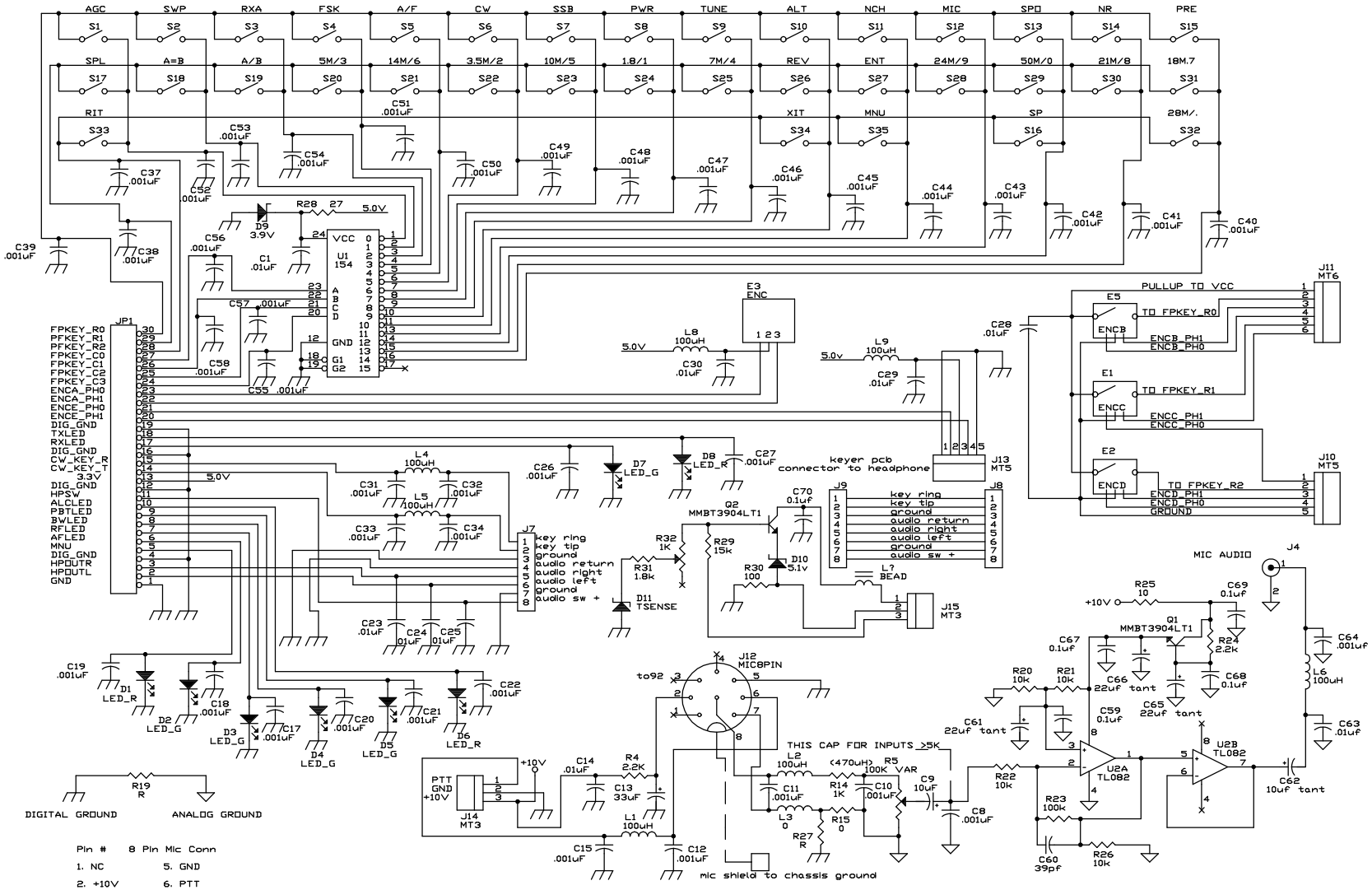

Pin #	8 Pin Mic Conn
1. NC	5. GND
2. +10V	6. PTT
3. NC	7. MIC-
4. NC	8. MIC+

TEN-TEC, INC.
1185 DOLLY PARTON PARKWAY
SEVIERVILLE, TN 37862

Size	Document Number	REV
C		
Date: February 16, 2007	Sheet of	

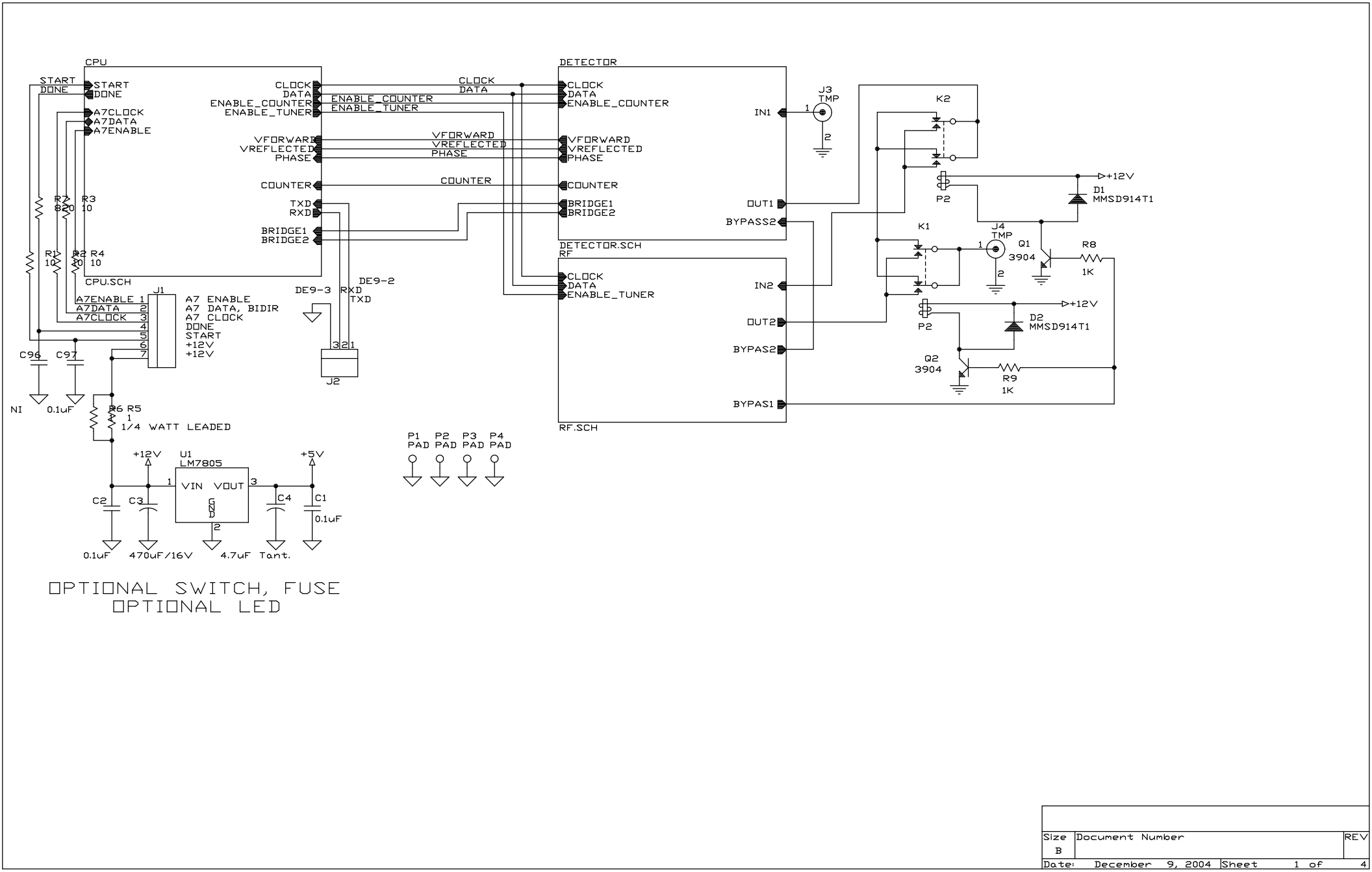

OPTIONAL SWITCH, FUSE
OPTIONAL LED

Size	Document Number	REV
B		
Date: December 9, 2004	Sheet 1 of 4	

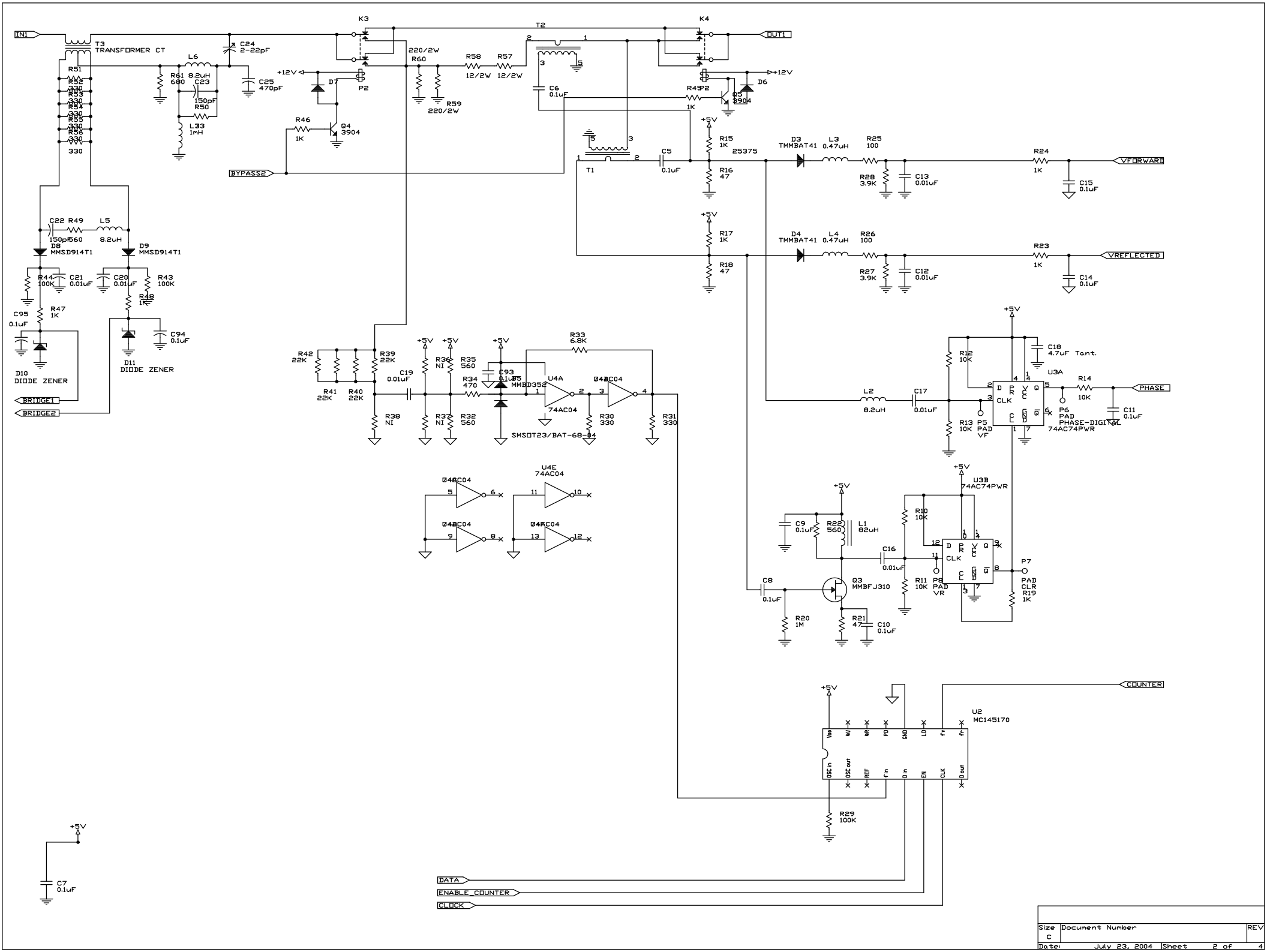

Size	Document Number	REV
C		
Date: July 23, 2004	Sheet 2 of 4	

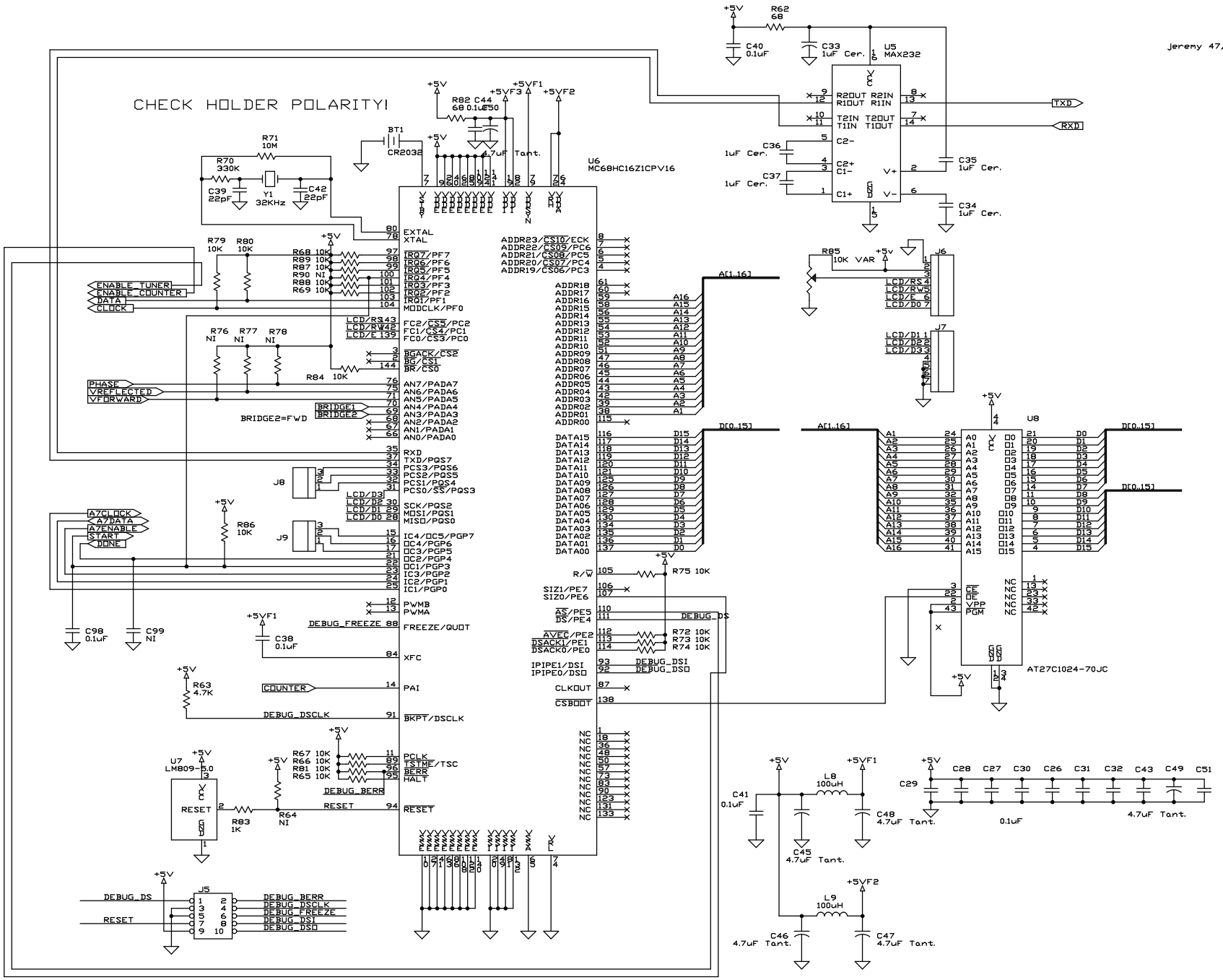

Size	Document Number	REV
C		
Date: December 9, 2004	Sheet 3 of 4	

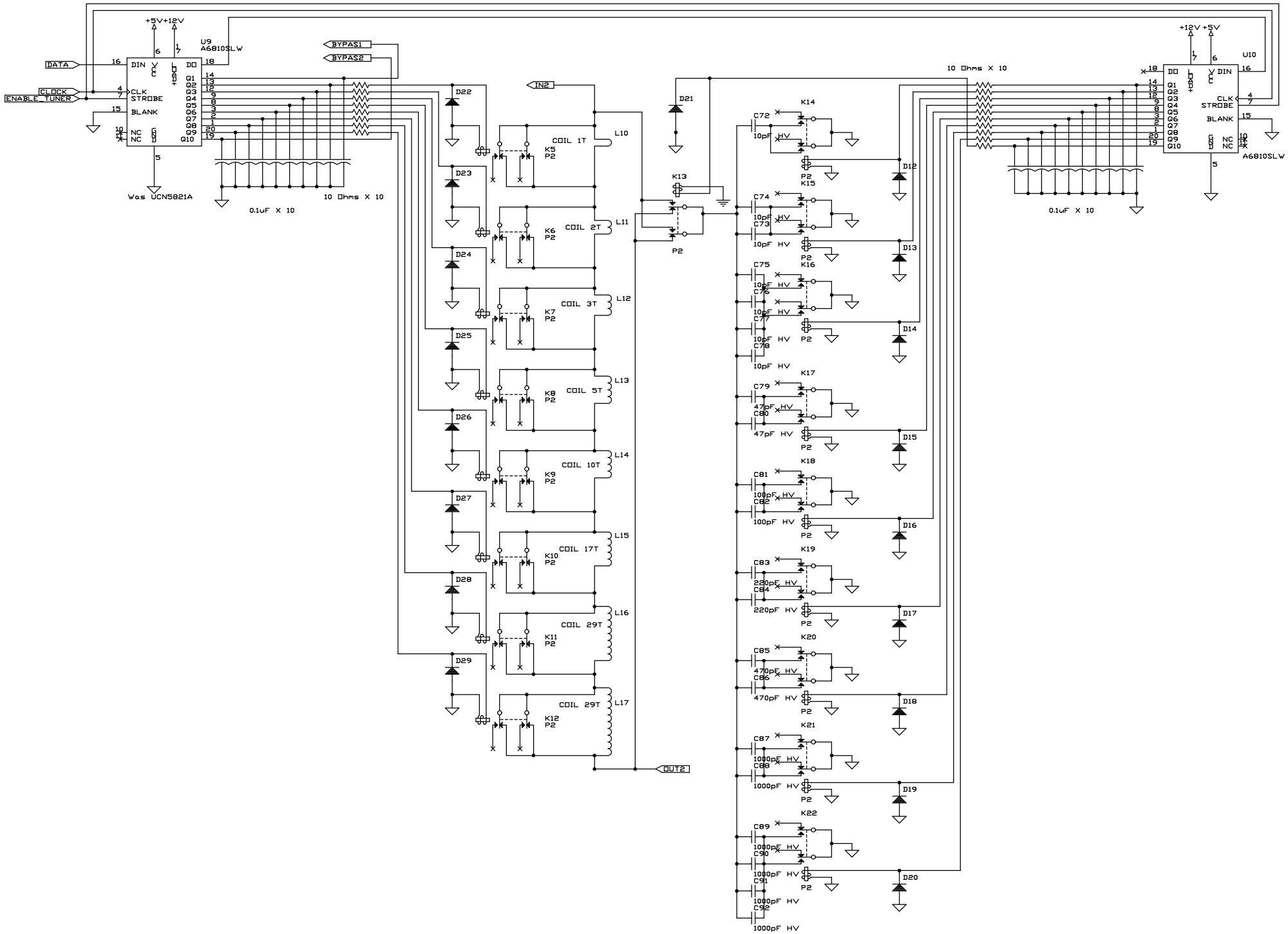

Size	Document Number	REV
C		
Date: July 15, 2004	Sheet 4 of 4	