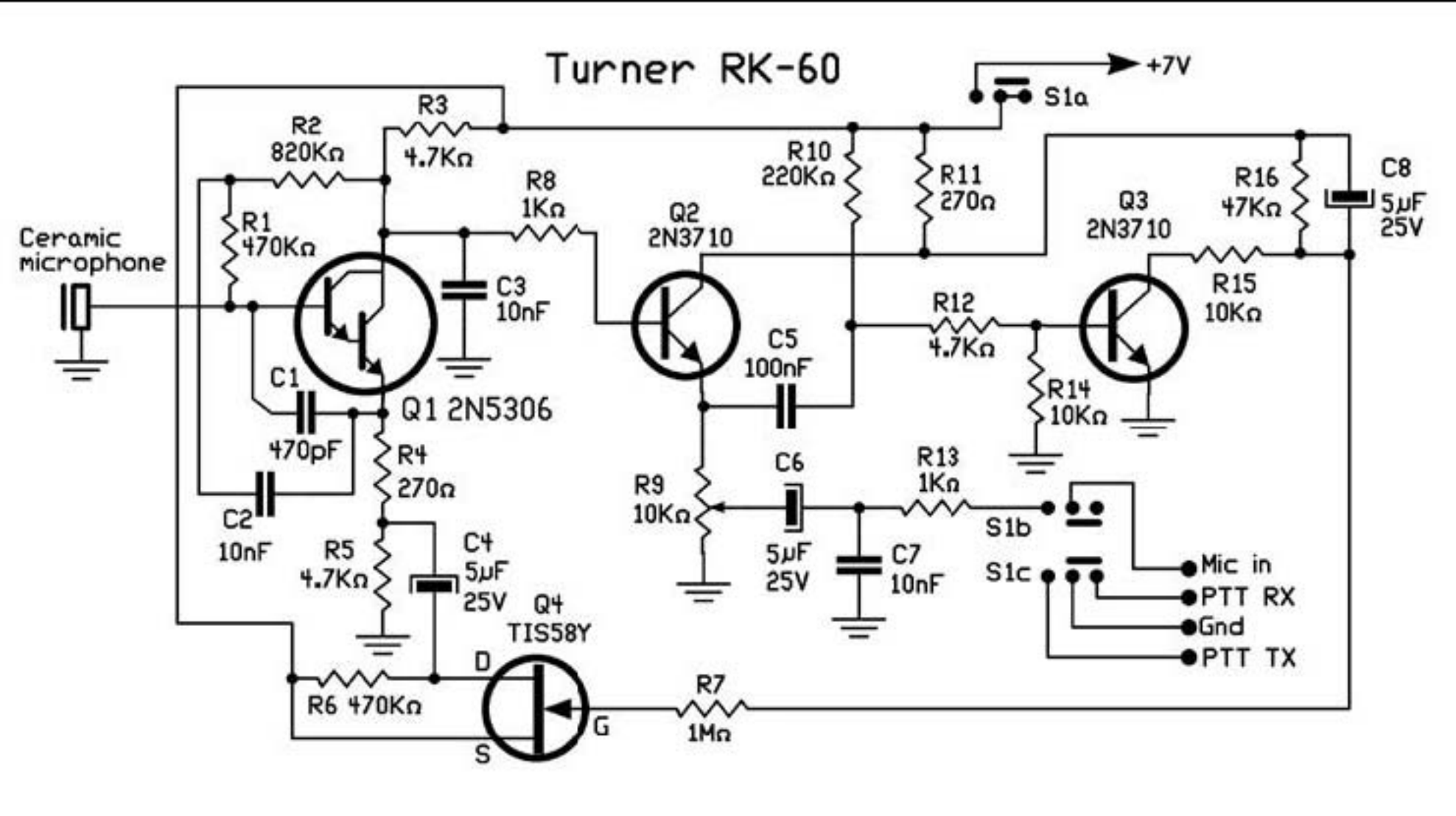
Turner RK-60
+7V
S1a
R3
4.7KΩ
R2
820KΩ
R1
470KΩ
Ceramic
microphone
C3
10nF
R8
1KΩ
Q2
2N3710
R10
220KΩ
R11
270Ω
Q3
2N3710
R16
47KΩ
C8
5µF
25V
R15
10KΩ
R12
4.7KΩ
R14
10KΩ
C5
100nF
C1
470pF
Q1 2N5306
R4
270Ω
C2
10nF
R5
4.7KΩ
C4
5µF
25V
R9
10KΩ
C6
5µF
25V
C7
10nF
R13
1KΩ
S1b
S1c
Mic in
PTT RX
Gnd
PTT TX
Q4
TIS58Y
D
G
S
R6 470KΩ
R7
1MΩ