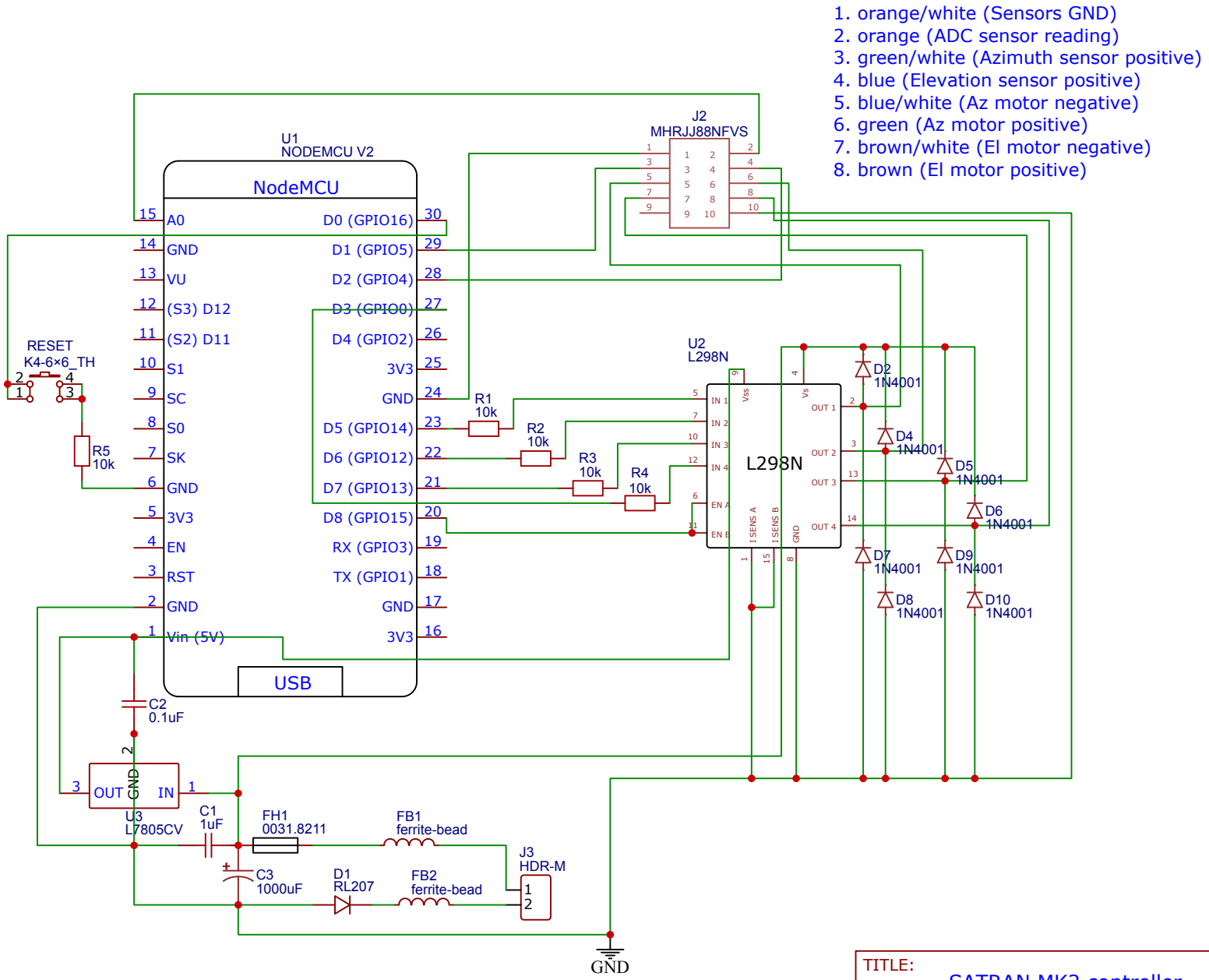

TITLE: SATRAN MK2 controller		REV: 1.0
EasyEDA	Company: Danaco	Sheet: 1/1
	Date: 2021-01-04	Drawn By: Daniel Nikolajsen