INDEX

200V INSTRUCTION MANUAL

		Page No.
	INDEX	1,1A,1B,1C,1D
	Warranty	
	Claim for Damage in Shipment	
	Shipping Instructions	
	FACTORY TECHNICAL ASSISTANCE	
SECTION I	- GENERAL DESCRIPTION	2
	Seven Types of Emission	2
	Power Output - Plus or Minus 1 db.	2
	Only One Tuning Control - the VFO	3
	Built-in Precision Linear VFO	3
	Double Heterodyne Circuit	3
	Frequency Coverage	4
	Only Four Operating Controls	4
	Emission Selector (Six Position)	5
	Set and Forget Controls	5
	Mismatch Indicator	5
	Limiter Indicator	5
	Two Inch Monitoring Oscilloscope	6
	Advanced Phasing SSB Generator	6
	Meter	6
	Zero Setting (Fiduciary Dial Scale)	7
SECTION II	- INSTALLATION	8
	Unpacking	8
	Power Source	8
	Physical Location	8
	Microphone	9
	Antenna	9
	Illustration: Receiver Connection Diagram	P 257
	Illustration: Antenna Relay Connections	P 255
	Illustration: Using the 200V with a Drake Phone Patch	P 258

	Page No.
SECTION III - CONTROLS	10
1. Set-and-Forget Controls	10
Speech Level	10
Vox Trip Level	10
Anti-Trip Level	10
Vox Relay Release Time	10
FSK Deviation	10
Carrier Null Controls A and B	10
Pre-Set AM Carrier Potentiometer and DSBSC Switch	10
Pre-Set CW Carrier	10
Power Output	11
Xtal - VFO Switch	11
External Xtal Corrector	11
External Xtal	11
CW and FSK Monitor Level	11
2. Controls on Top of the Chassis	11
AF Ratio Potentiometer	11
AF Bal. Potentiometer	11
Adj. Lim. Ind. Potentiometer	11
Hum Bal. Potentiometer	11
AM-PM Pad	12
Scope Width Potentiometer	12
Intensity Potentiometer	12
Focus Potentiometer	12
Meter Adj. Potentiometer	12
First Mixer Cathode Potentiometer	12
Second Mixer Grid Potentiometer	12
Second Mixer Cathode Potentiometer	12
Second Mixer Screen Grid Potentiometer	12
3. Controls on Right End of Chassis	12
EL84/6BQ5 Bias, R421	12
6550 Bias, R422	12
Illustration: Set-and-Forget Controls P266	

		Page No.
SECTION IV	- REAR CONNECTIONS	13
	Antenna Receptacle	13
	To Ant. Rly. 115 VAC 25 Watts Socket	13
	Internal Relay Socket	13
	PTT MIC Jack	13
	Phone Jack	13
	CW - MAN - VOX Jack	13
	CW Stby. Jack	13
	CW PTT Jack	13
	Receiver Output Socket	14
	Speaker V.C. Socket	14
	MIC Connector	14
	Bias Jack	14
	FSK-1 Jack	14
	FSK-2 Jack	14
	VFO IN Jack	14
	VFO OUT Jack	14
	AF OUT Jack	14
	Fuse	14
	Illustration: 200V Rear Chassis Connections	P265
	Illustration: 200V Top View	P253
SECTION V	- OPERATION	15
	1. Single Sideband Suppressed Carrier Adjustment	15
	2. Amplitude Modulation Adjustment	16
	3. PM and CW Carrier Adjustment	16
	Illustration: 200V Oscilloscope Patterns	P259
	Illustration: 200V Oscilloscope Patterns	P260
SECTION VI	- TELEVISION INTERFERENCE	17
	OPERATING NOTES	19
	1. Flat-Topping	19
	2. Reducing Low Frequency Response in the Speech Amplifier	19
	3. FSK Deviation	19
	4. Undesirable Relay Operation Caused by Emission Switch	19
	5. Calibration Signal Weak	20
	6. CW-FSK Monitoring with Earphones	20
	7. Using a Key in the CW-MAN-VOX Jack	20

		Page No.
SECTION VII	- THEORY OF OPERATION	21
	Power Supply	21
	Microphone Preamplifier	21
	Plug-In Audio Limiter Module	21
	Plug-In Audio Filter Module	22
	Vox Amplifier and Vox Rectifier	23
	QT Amplifier and QT Rectifier	23
	Relay Control	23
	Audio Phase Inverter	24
	PS-2 Differential Audio Phase Shift Network	24
	AF Amplifier and Modulator	24
	Interpreting Switch Drawings	25
	Emission Switch Circuits	25
	LSB Position	26
	USB Position	26
	AM Position	26
	PM Position	26
	CW Position	26
	FSK Position	27
	Function Switch	27
	Off Position	27
	Stby Position	27
	VOX Position	27
	Voice Calibrate	28
	Carrier Calibrate	28
	PTT Position	28
	Manual Position	28
	Balanced Modulator	29
	8 MC Crystal Oscillator and Reactance Tube	29
	8 MC RF Phase Shift Circuits	29
	VFO	30
	VFO Buffer-Doubler	30
	High Frequency Crystal Oscillator	31
	First Mixer	31
	Second Mixer	32
	RF Driver	32
	RF Power Amplifier	33
	Neutralizing the Power Amplifier	33
	8 MC Amplifier	34
	Horizontal Amplifier	34
	2 Inch Monitoring Oscilloscope	34
	Calibrate Level Circuit	35
	Illustration: Simplified Schematic of VOX and QT Circuits	P263
	Illustration: Simplified Blocking Bias, Operating Bias and Calibrate Circuits	P271
	Illustration: 200V VOX Relay	P256
	Illustration: 200V Block Diagram	P251
	Tube Compliment	36

		Page No.
SECTION VIII -	MAINTENANCE AND REPAIR	37
	Low Level Broadband RF Circuits	37
	Removing the Plug-In Audio Limiter, Plug-In Audio Filter, or Relay Cover	37
	Removing the PS-2	37
	Fan Motor Maintenance	37
	Replacing Defective Sections in the Bandswitch	38
	Removing the VFO	38
	VFO Recalibration	39
	Determining the proper Crystal for Crystal Controlled Operation	40
	Conversion Crystal Frequencies	41
	VFO Lubrication	41
	Cathode Ray Tube Static Charge Distortion	41
	Sideband Suppression Adjustment	42
	Sideband Suppression Adjustment Without the Use of a Scope	43
	Illustration: 200V Sideband Alignment	P264
	Adjusting the Mixer Potentiometers	44
	Illustration: 200V Limiter Battery Maintenance	P254
	Illustration: Xtal Oscillator Plate Coil Chart	P270
	Illustration: 2nd Mixer Coil Chart	P273
	Illustration: Driver Coil Chart	P272
	Illustration: Physical Correlation between the 200V and the 200V Wiring Diagram	P268
	Illustration: Resistor Board on Low Level RF Chassis	P269

W A R R A N T Y

In order to validate your Warranty it is essential that the Warranty Registration card be filled out and mailed within one week after purchase. If no card is included in your unit please advise the factory immediately.

Central Electronics, Incorporated, warrants the parts and tubes in its Amateur Radio products to be free from defects in workmanship and material arising from normal installation, use and service. Its obligation under this warranty is limited to remedying the defect or replacing any such parts or tubes in this product provided:

(1) Original consumer purchaser has completed and returned to Central Electronics, Inc., promptly following his purchase, the registration card included in the instruction manual furnished with this product.

(2) Notice of the claimed defect is submitted in writing to Central Electronics, Incorporated, within six (6) months, (except vacuum tubes which are limited to a period of ninety (90) days) from the date of the original purchase.

(3) Upon receipt of shipping instructions from Central Electronics, Incorporated, the unit is delivered by the original consumer purchaser to Central Electronics, Incorporated, for examination with all transportation expense prepaid. Central Electronics, Incorporated, is not responsible for any transportation expense.

(4) The examination discloses, in our judgment, that this product is thus defective in accordance with our established policies.

Any tube or part of a product approved for remedy or exchange hereunder will be remedied or exchanged by Central Electronics, Incorporated, without charge to the owner.

This warranty does not extend to any product which has been subjected to misuse, neglect, accident, excessive moisture or exposure, improper installation, or use in violation of instructions furnished by us, nor to units which have been repaired, rewired or altered outside of our factory without our written permission, nor to cases where the serial number thereof has been removed, defaced or changed, nor to a product which has had the serial number or name altered, defaced or removed.

Central Electronics, Incorporated, assumes no liability and shall not be liable in any respect for failure to perform or delay in performing its obligations with respect to the above warranty if such failure or delay results, directly or indirectly, from any preference, priority or allocation order issued by the Government, or because of any other act of the Government, or by war, conditions of war, inadequate transportation facilities, conditions of weather, acts of God, strikes, lockouts, Governmental controls, or Central Electronics' reasonable requirements for manufacturing purposes, or any cause beyond its control or occurring without its fault, whether the same kind or not.

This warranty is expressly in lieu of all other agreements and warranties, expressed or implied, and Central Electronics, Incorporated, does not authorize any person to assume for it the obligations contained in this warranty, and neither assumes nor authorizes any representative or other person to assume for it any other liability in connection with such Central Electronics, Incorporated, product or parts or tubes thereof.

The warranty herein extends only to the original consumer purchaser and is not assignable or transferrable.

S H I P P I N G

All shipments should be made in original factory cartons or crates. If these are not available the units should be packed in a wooden box or a carton-within-a-carton with plenty of excelsior or similar shock absorbing material surrounding the unit and between cartons.

Proper cartons and crates are available for sale in the event suitable containers cannot be found.

CLAIM FOR DAMAGE IN SHIPMENT

The instrument should be tested as soon as it is received. If it fails to operate properly (in accordance with procedure outlined in instruction book), a damage claim should be filed with the carrier. A full report of damage should be given to the claim agent, and a copy forwarded to us. We will then advise you of the disposition to be made of the equipment and arrange for repair or replacement. Include information on when and where purchased, model number and serial number in all correspondence with the factory.

200V EXCITER TRANSMITTER

SECTION I

GENERAL DESCRIPTION

The 200V is a 100 watt output Broadband Exciter Transmitter covering the amateur bands from 80 through 10 meters with self-contained VFO and power supply.

It is available in a well ventilated steel table model cabinet finished in gray which may be removed for mounting in a standard 19 inch rack.

The self-contained A.C. power supply is designed for operation from a single phase 115 volt A.C. 50 to 60 cycle power source only. The power consumption is approximately 350 watts in standby position and 600 watts with full carrier inserted.

SEVEN TYPES OF EMISSION:

It is capable of seven types of emission, as follows:

Selectable Single Sideband with Carrier
Selectable Single Sideband Suppressed Carrier
Double Sideband Suppressed Carrier
Double Sideband (AM) with Pre-set Carrier
Phase Modulation with Adjustable Carrier
CW with four methods of keying, and with a Pre-set Carrier Level
Frequency Shift Keying (FSK) with Adjustable Carrier

POWER OUTPUT - Plus or minus 1 db.

100 Watts Single Tone SSB, CW
100 Watts PEP Double Sideband Suppressed Carrier
25 Watts AM
100 Watts PM or FSK, at 50% duty cycle

The final amplifier stage utilizes a pair of 6550 tubes. The 6550 has a plate dissipation of 35 watts and is featured in high power ultralinear high-fidelity applications at 100 watts output. The linearity is infinitely superior to the popular 6146.

The pair of tubes will deliver 100 watts (I^2R) of single tone RF power, read on an ammeter into a 50 to 72 ohm load on 10 meters, before grid current flows. Two tone third order distortion products are down in excess of 40 db.

ONLY ONE TUNING CONTROL - THE VFO:

All other circuits are either fixed frequency or band pass, using the Multiphase patented No Tuning Broadband Couplers. A single knob band switch selects all bands and antennas with the accessory AS-100 switch.

BUILT IN PRECISION LINEAR VFO:

The oscillator circuit is self-compensating for changes in tube transconductance (U.S. Patent #2,867,725) caused by line voltage fluctuations or ageing. It is exceptionally rugged and permeability tuned by a precision stainless steel lead screw mounted in preloaded ball bearings. Frequency is read directly in 1 kilocycle increments in the circular "kilocycle" window. A slide-rule Megacycle scale rotates with the bandswitch so only the band in use appears in the window. Frequency is read directly without addition or computation with approximately 10 feet of band spread on each 1 megacycle range. For maximum operating convenience, a two speed knob provides fast tuning at 100 kilocycles per turn and slow tuning at 5 kilocycles per turn.

VFO frequency drift is less than 25 cycles in any 10 minute period after a five minute warm up.

The VFO is calibrated to zero beat accuracy every 50 kilocycles. Calibration error does not accumulate from one end of the band to the other. It can be recalibrated right at your operating position without removal from the exciter.

DOUBLE HETERODYNE CIRCUIT:

The VFO covers 5 to 6 megacycles and is heterodyned against crystal controlled oscillators or the master 8 megacycle signal, as determined by the bandswitch, to provide output on all bands. With this method, the sideband generator operates at a fixed crystal controlled frequency, therefore; rebalancing is unnecessary each time the band is changed.

For maximum stability, all oscillators in the heterodyne system oscillate continuously and the plate coils for the high frequency crystals are temperature compensated.

Blocked grid keying is used on the mixers and linear amplifiers to provide clean keying.

FREQUENCY COVERAGE:

A single knob bandswitch changes Broadband Couplers (U.S. Patent #2,864,060) in all stages. The 200V covers all of the 80, 40, 20, 15 and 10 meter bands with one switch position per band. Power output is constant within 1 db. across the following bands:

80 meters	-	3.5	to	4.5 megacycles
40 meters	-	6.5	to	7.5 megacycles
20 meters	-	13.5	to	14.5 megacycles
15 meters	-	20.5	to	21.5 megacycles
10 meters	-	27.7	to	29.7 megacycles

There is a generous overlap beyond the Amateur bands for MARS, CAP and commercial applications. The VFO has 50 kilocycles of overtravel at each end (100 KC above 25.6 MC) for which accuracy and linearity are not guaranteed. External crystals in the 5 to 6 megacycle range may be used for frequency control.

A spare position is provided to permit installation of Broadband Couplers for 160 meters (1750 to 2500 kc.) or any 1 megacycle section of the spectrum not covered by the amateur bands such as 4500 kc. to 5500 kc., 5500 kc. to 6500 kc., 7500 kc. to 8500 kc., etc. Note that these begin and end at .5 mc. points ONLY. A 2 mc. range is available from 25.6 to 27.6 megacycles. Operation in the 50 to 54 mc. amateur band is not practical.

ONLY FOUR OPERATING CONTROLS:

FUNCTION SWITCH: Power OFF, Standby, VOX (Voice Controlled Break-in), Voice Calibrate, CW-Calibrate, PTT (Push to Talk). and Manual.

BANDSWITCH: A single knob selects 80, 40, 20, 15 or 10 meters, with a spare position for special applications.

CALIBRATE LEVEL: Varies the calibrate output to suit band conditions or variations in installation. The VOICE calibrate position allows you to "talk yourself on frequency." The CARRIER calibrate position provides an unmodulated carrier for zero beating purposes.

EMISSION SELECTOR: (SIX POSITION)

1 - LSB Lower Sideband with suppressed carrier
2 - USB Upper Sideband with suppressed carrier
3 - AM Double Sideband with pre-set carrier (DSBSC switch for DSB)
4 - PM Phase Modulation with adjustable carrier
5 - CW Four ways to key with pre-set carrier
6 - FSK Frequency Shift Keying for Teletype with adjustable carrier

SET AND FORGET CONTROLS:

There are two magnetic doors on the front panel of the 200V. They conceal seldom used controls, such as Speech Level, Voice Control Trip Level, Anti-Trip Level, VOX Relay Release Time, Carrier Null Controls A and B, Pre-set AM Carrier, Pre-set CW and PM Carrier, DSBSC Switch, Power Output, FSK Deviation, FSK and CW Monitor Level, Xtal-VFO Switch and External Xtal Frequency Corrector.

MISMATCH INDICATOR:

Whenever the standing wave ratio becomes excessive in the output RF load circuit of the Exciter, the screen grid overcurrent relay will add protective grid bias to the stage, operate the MISMATCH INDICATOR and provide an audible alarm caused by the relay chatter until mismatch is corrected or the set turned off. Normal operating screen current is about 30 milliamperes for the two tubes. When this reaches approximately 65 ma., the relay will operate.

There are some antenna conditions (shorts, opens, or certain mismatches) that will not operate the relay. Screen current will only increase when the plates operate into a high impedance load. In some portions of the band, the broadband output couplers become a low impedance and screen current will not rise excessively, even under external mismatched conditions. However, this will not be harmful to the output tubes.

LIMITER INDICATOR:

Provides a visual indication of the amount of speech clipping in use. For normal operation, the Speech level control should be advanced to the point where the indicator flashes only occasionally, which indicates approximately 3 db. of clipping. Under adverse transmitting conditions, the Speech Level may be advanced to the point where the bulb flashes rapidly or glows faintly almost continuously, which indicates approximately 10 db. of speech clipping.

TWO INCH MONITORING OSCILLOSCOPE:

The internal oscilloscope continuously monitors linearity of all stages from the Balanced Modulator to the RF output connector, and also furnishes a positive indication of the percentage of modulation on AM. It assures top performance while the unit is on the air.

The Intensity and Focus controls are adjustable through the top of the cabinet.

ADVANCED PHASING SSB GENERATOR:

Central Electronics is once again years ahead of the field with a new approach to SSB generation, - sparkling performance that exceeds a filter with equal long term stability! No-tuning Broadband techniques have even been applied to the balanced modulator making it non-critical. Carrier suppression is completely stable in excess of 50 db. below maximum output.

A new Audio Phaseshift Network, the PS-2 is constructed with heat cycled stable components with .1% accuracy. The PS-2 in combination with its associated circuits is capable of at least 50 db of unwanted sideband suppression. To insure long term audio amplitude balance, 35 db of inverse feedback is applied around the modulator system. It is possible to change modulator tubes without affecting the sideband suppression. The RF phaseshift circuit is also a non-critical, low impedance, wide band design to provide the ultimate in SSB suppression and long term stability.

METER:

The illuminated 2 inch rectangular meter indicates the DC input to the final amplifier stage. Fixed operating bias on the final amplifier stage will provide a resting plate dissipation 50 to 60 watts when no RF drive power is applied. The scale is marked for proper input power for both AM and CW. The power input for PM and FSK should be the same as that used for CW. When operating DSB or SSB with suppressed carrier, the meter will not read much higher than about 100 watts with 3 db of speech clipping.

A bias adjustment potentiometer is mounted on the right side of the chassis to set the resting plate current to the proper level (50 to 60 watts) and will require adjustment only when tubes age, or are changed.

When the speech clipping is increased to about 10 db. the average meter reading will be slightly higher, and it may be necessary to retard the power output control slightly. The meter should never be used as an indicator for suppressed types of speech transmission due to the peak patterns. Only the oscilloscope can indicate the voice peaks and should be used for speech monitoring. The maximum meter reading with speech may be used to determine the FCC final amplifier DC power input rating.

Ordinary 115 volt lamps can not be used to determine power output accurately when connected directly to the 50 ohm output, since their inductive reactance will cause an appreciable error, especially at frequencies above 4 megacycles.

ZERO SETTING. A slotted-head screw located on the panel just below the TUNING knob can be used to set the hairline on the kilocycle scale to provide very accurate readings when set against a crystal standard.

SECTION II

INSTALLATION

The 200V is shipped ready to connect and operate. If it has been damaged during shipment, an insurance claim should be filed with the carrier.

UNPACKING

1. Open the three wire latches on one corner of the case.
2. Remove the packing material and check carefully for small packages.

The crate should be retained for possible future re-shipment. Due to the weight of the equipment, the use of cardboard containers is not recommended.

POWER SOURCE:

The 200V is designed for use with 115 volt, 50 to 60 cycle A.C. only. Power circuit wiring should have #16 gauge minimum conductor size to prevent loss of power and poor line regulation. The A.C. line circuit by-pass capacitors are arranged so that when the plug is inserted in one polarity, no shock will be experienced when making contact between the chassis and any ground object. Correct polarity may be determined by touching a ground wire to the chassis and reversing the plug if necessary, until no sparking is observed.

CAUTION: Use a heavy, short ground connection to the 1/4 inch stud on the rear of the chassis. The 200V, the receiver, linear amplifier and linear amplifier power supply (if used) should be bonded together to preclude the possibility of electrical shock due to a faulty component.

PHYSICAL LOCATION:

The 200V should be located in such a position that strong drafts from open windows or other intermittent forced air ventilating, heating or cooling systems will not strike the unit directly. Allow sufficient clearance on each side for normal ventilation. Antenna tuners, end fed antennas or untuned and tuned antenna feeders should not be placed in close proximity to the 200V or any of the external connections, particularly when a high power linear amplifier is used. Avoid placing of the antenna or feeders in a position where any appreciable amount of RF is coupled to the power wiring.

MICROPHONE:

Microphones having a relatively flat or moderate rising characteristic should be used. Sufficient gain is available in both the speech and VOX circuits for microphones having an output as low as minus 55 db. Directional microphones are preferred for proper VOX and QT operation. Expensive microphones are not necessary, since the audio filter restricts the response.

ANTENNA:

The 200V output circuit is designed for use with either 52 or 72 ohm coaxial cable. Type RG 58U or RG 59U may be used for reasonably short runs on the lower frequencies. At 28 megacycles the loss in these smaller cables is 2 to 3 db. per hundred feet even when brand new, so RG 8U or RG 11U should be used.

The Broadband output couplers in the 200V are designed to deliver maximum undistorted power into unbalanced 50 to 72 ohm loads. For best results, the SWR should not exceed 1.5 or 2 to 1. The 200V will work into higher standing wave ratios; however, it is to your advantage to provide the best possible match between the antenna and the feed line. This will radiate the maximum amount of signal. Antenna reactance cannot be tuned out at the transmitter even with a Pi network; it must be tuned out by adjusting the antenna length.

If the antenna impedance is other than 50 to 72 ohms unbalanced, a balun or antenna tuner must be used.

When individual antennas or final amplifiers are used on each band, the accessory AS-100 antenna switch is available for installation on the rear of the chassis. It is linked mechanically to the bandswitch and automatically selects the proper antenna or amplifier.

Either a coaxial relay, or any of the popular TR switches may be used for switching the antenna from the transmitter to the receiver. Recommended relays are the Advance type CB/ 1C 2C/ 115 VAC or the Dow type DKC-GE-115V. The internal relay in the 200V furnishes keyed 115 volts AC for antenna relay operation. The auxiliary contacts on these relays must also be connected to the 200V as described in the Antenna Relay Connection Diagram.

CENTRAL ELECTRONICS INC.

RECEIVER CONNECTION DIAGRAM

MODEL 200V P257

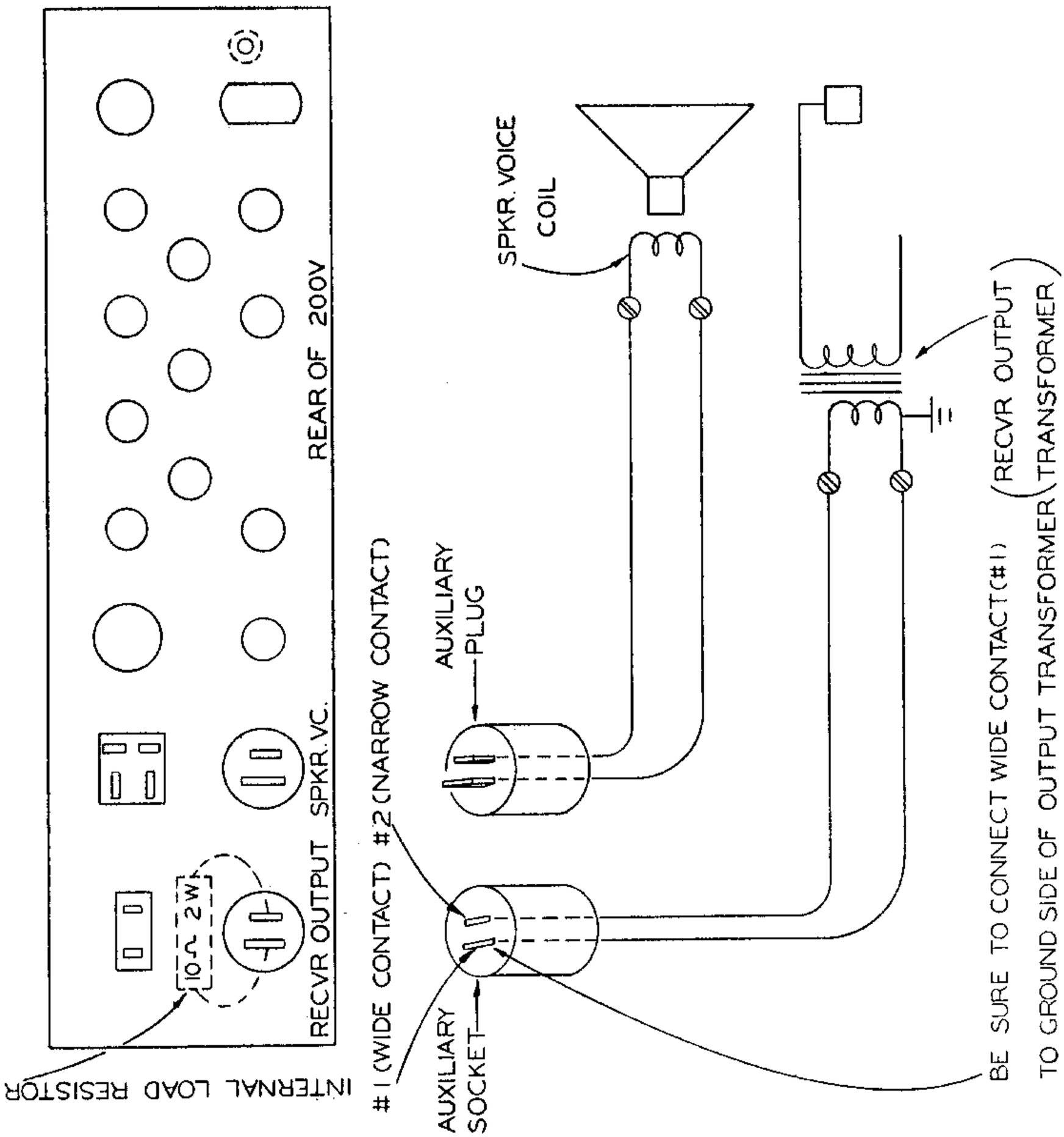

CENTRAL ELECTRONICS, INC.

ANTENNA RELAY CONNECTIONS FOR 200V

P255

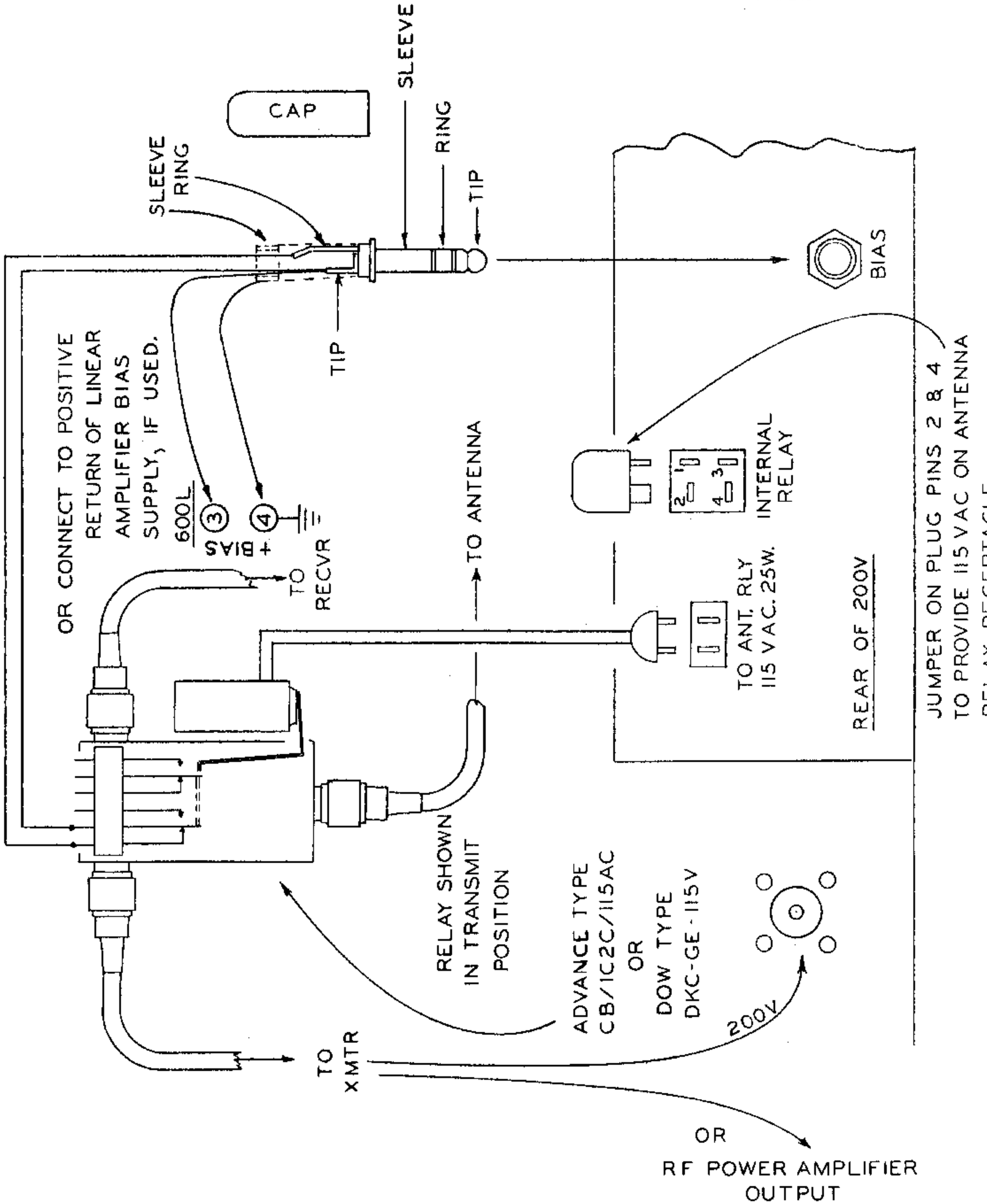

PRINTED IN U.S.A.

200V WITH DRAKE PHONE PATCH

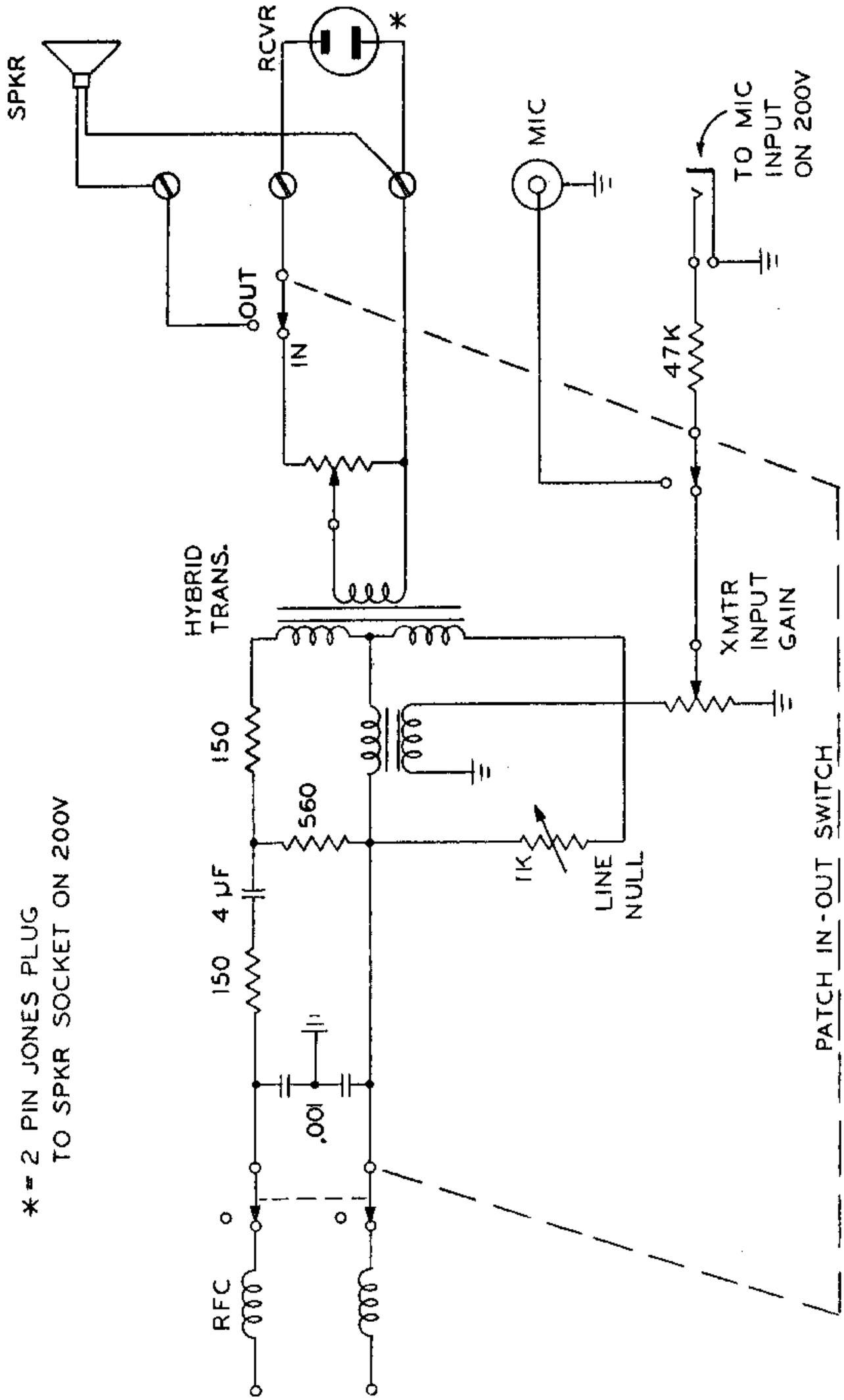

P258

CENTRAL ELECTRONICS, INCORPORATED
2/22/60

SECTION III

CONTROLS

1. SET AND FORGET CONTROLS:

SPEECH LEVEL. Advance until the Limiter Indicator begins to flash. Each division on the scale indicates 6 db., approximately.

VOX TRIP LEVEL. Varies the sensitivity of the VOX circuit. Advance the control to the point where the first letter of a spoken word operates the relay reliably.

ANTI-TRIP LEVEL. This control prevents loudspeaker signals from tripping the VOX relay. With a loud signal tuned in, advance the control to the point where the relay will not trip.

VOX RELAY RELEASE TIME. Varies the time constant of the relay release. Adjust for desired time.

FSK DEVIATION. Adjusts the Frequency shift deviation from about 100 cycles to 900 cycles. This will remain constant on any band or frequency.

CARRIER NULL controls A and B. INITIAL ADJUSTMENT: Allow about ten minutes for the 200V to warm up, then balance the carrier for minimum. After about one hour of operation, check the carrier suppression, and rebalance if necessary. After two hours of operation, balance the carrier out for the last time. After these adjustments, the carrier will remain at 50 db. down, or better. The next time the 200V is turned on from a cold start, the carrier suppression should be 50 db. down within about 5 minutes and remain below this level thereafter.

PRE-SET AM CARRIER POTENTIOMETER AND DSBSC SWITCH. For AM, adjust for 100 watts carrier input. For DSBSC (double sideband suppressed carrier), turn completely counter-clockwise until switch operates. The switch increases the audio level to the balanced modulator 6 db. for proper DSBSC modulation level. In the AM position, the switch reduces the audio level 6 db. to allow for carrier insertion.

PRE-SET CW CARRIER. With the EMISSION SELECTOR in the CW position adjust for any value up to 175 watts input. Also pre-sets PM carrier level.

POWER OUTPUT. Controls the level of the 8 mc. master generating system at the grid of the first mixer. Varies the power output of the exciter from maximum down to about 10 watts output for driving amplifiers that require less power.

XTAL-VFO SWITCH. For changing from internal VFO to external crystal controlled operation. Use crystals in the range of 4950 to 6050 KC.

EXTERNAL XTAL CORRECTOR. Provides frequency adjustment for the external 4950 to 6050 KC crystal to obtain exact calibration.

EXTERNAL XTAL. For external 4950 to 6050 KC crystals.

CW AND FSK MONITOR LEVEL. Adjusts the receiver output level in the phones or speaker in the CW VOX, CW MAN, CW PTT and FSK positions for monitoring purposes.

2. CONTROLS ON TOP OF THE CHASSIS:

AF RATIO potentiometer. Balances the AF input voltages to the PS-2 audio phase shift network. Controls sideband suppression. See chapter on Sideband Suppression adjustment.

AF BAL. potentiometer. Equalizes the output of the AF modulator tubes. Controls sideband suppression. See chapter on Sideband Suppression adjustment.

ADJ. LIM. IND. potentiometer. Located on top of AUDIO LIMITER. Determines the level at which the LIMITER indicator operates. With the Speech Level turned off, turn the control S L O W L Y clockwise until the neon indicator starts to glow. Now turn the control slowly counterclockwise until the indicator becomes extinguished. This control adjusts the sensitivity of the indicator circuit only, but has no effect on the operation of the limiter itself.

HUM BAL potentiometer. Adjusted for minimum hum in the speech system. To adjust, disconnect the microphone and set the Speech Level to about 3 o'clock. With the Emission switch in one of the SB positions and the Function switch in Voice Calibrate, balance carrier to a minimum while listening to the signal in your receiver. After the carrier has been reduced to minimum, adjust the HUM BAL control for minimum hum while listening in the receiver and watching the "S" meter.

AM-PM PAD. Adjusted to set audio level 6 db. lower when switching from single sideband to AM or PM. May require readjustment after extensive ageing of V7, or when V7 is replaced. Adjust for proper modulation pattern on AM, with AM carrier set for about 100 watts input.

SCOPE WIDTH potentiometer. Adjusts the width of the pattern on the cathode ray tube.

INTENSITY potentiometer. Controls the intensity of the pattern on the cathode ray tube.

FOCUS potentiometer. For focusing the pattern on the cathode ray tube.

METER ADJ. potentiometer. Adjusts the WATTS INPUT on meter scale. Located inside shield compartment at right of 6550 tubes.

MIXER POTENTIOMETERS:

R404 First mixer cathode.
R411B Second mixer grid bias.
R415 Second mixer cathode.
R418 Second mixer screen grid.

Adjustment of these controls is given on Page 44.

3, CONTROLS ON RIGHT END OF CHASSIS:

EL84/6BQ5 bias, R421. Adjust for .38 volts DC at driver tube cathode test point to ground. The Function switch should be in Manual, and the Emission switch in USB or LSB with carrier balanced out and no audio input.

6550 bias, R422. Adjust for 55 to 65 watts input on Watts Input scale on the meter. The Function switch should be in Manual, and the Emission switch in USB or LSB with carrier balanced out and no audio input.

200V
2/24/61
Printed in USA

SET AND FORGET CONTROLS

LEFT DOOR

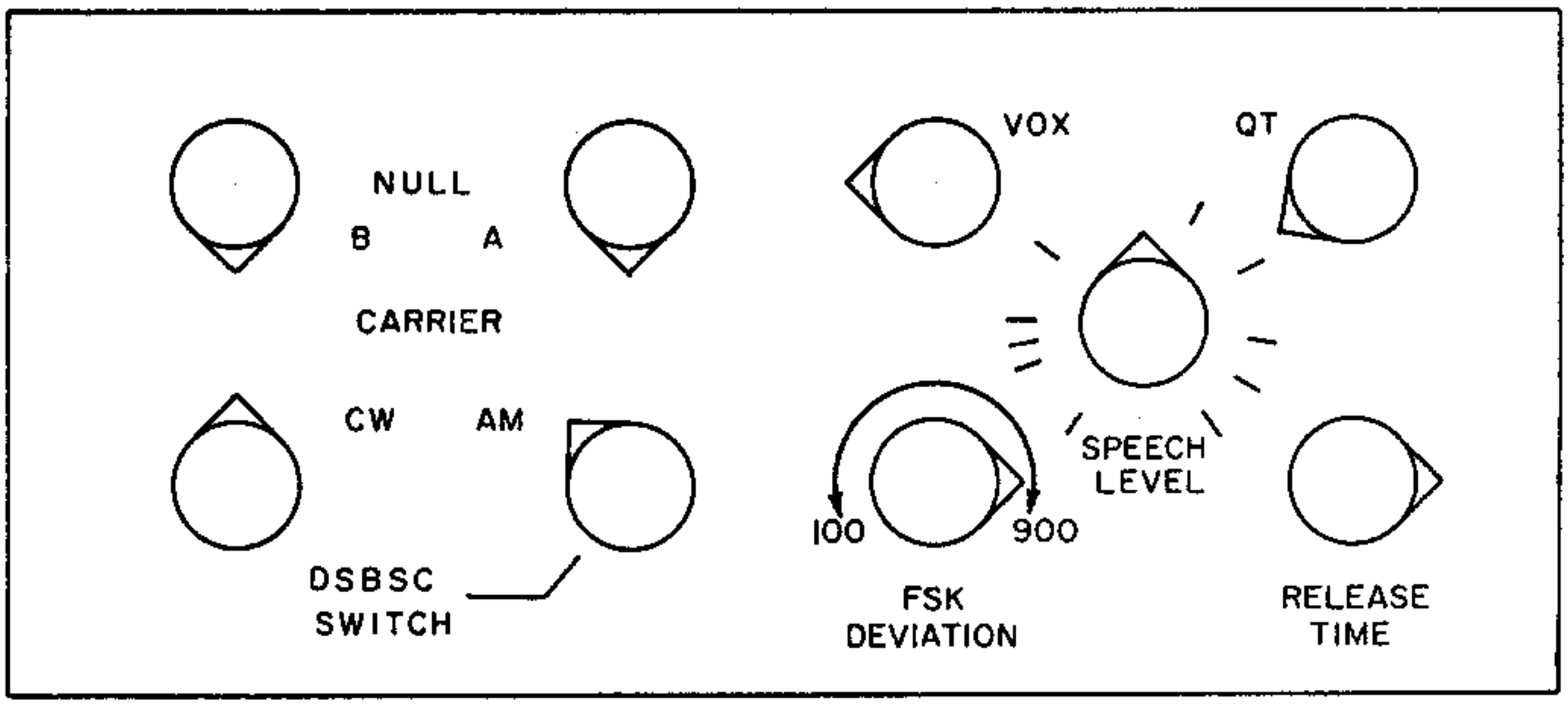

RIGHT DOOR

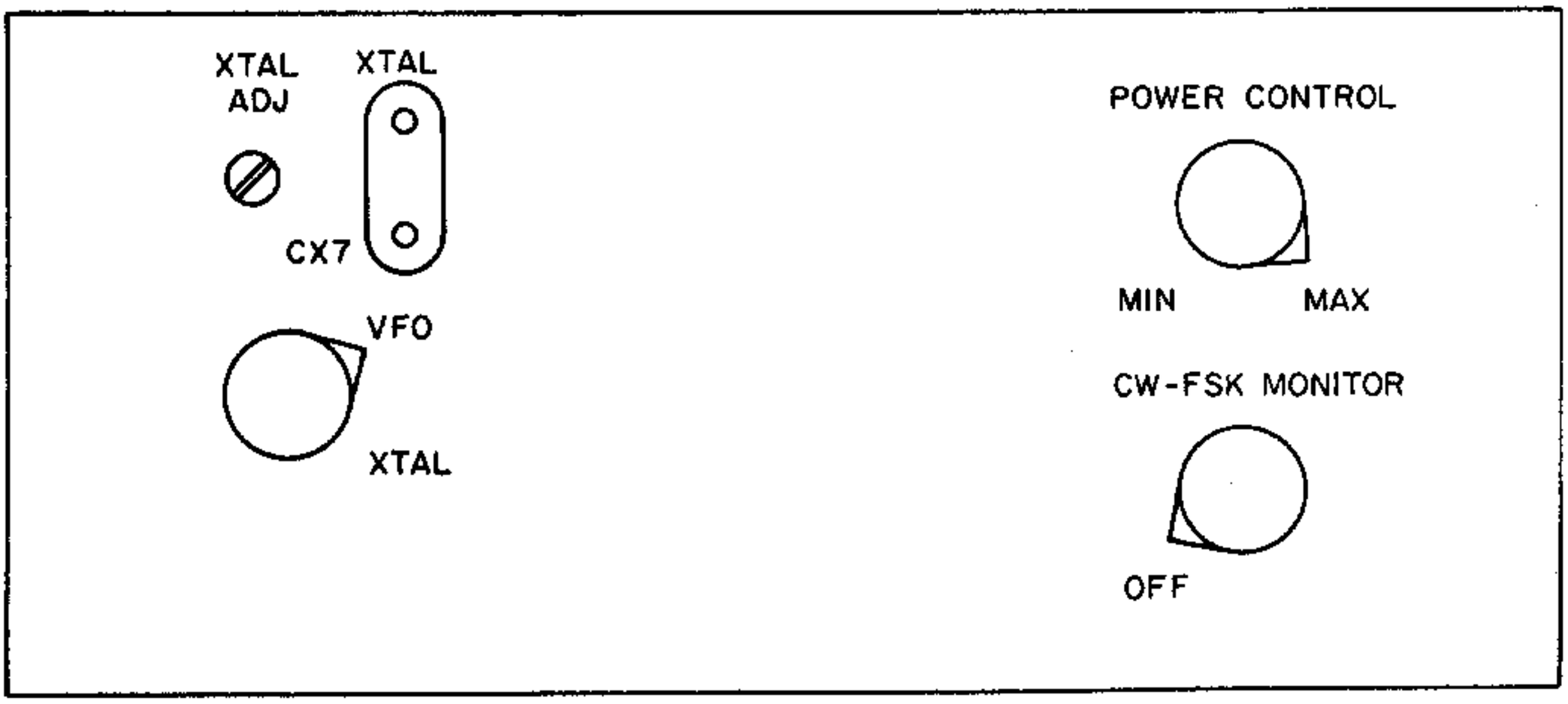

SECTION IV

REAR CONNECTIONS

ANTENNA receptacle. UHF type SO239 for 50 to 72 ohm unbalanced load. Use coaxial cable, any length down to a minimum of 6 feet is recommended to properly terminate the Broadband Output Couplers.

TO ANT RLY 115 VAC 25 WATTS socket. Provides keyed 115 VAC for antenna relay operation with jumper connected between 2 and 4 on INT RELAY plug.

INTERNAL RELAY socket. With a jumper between 2 and 4 on the plug, will provide keyed 115 VAC at the antenna relay AC socket. All plugs have this jumper installed. For keying other apparatus (without 115 VAC) BE SURE TO REMOVE THIS JUMPER. 4 and 1 are closed in transmit, 4 and 3 are closed in receive. Pin 2 is always connected to the 115 VAC line.

PTT MIC jack. For push-to-talk microphone operation. Pin 1 is the microphone lead, and pin 2 is for the switch. Use Amphenol MC2M connector.

PHONE jack. When headphones are plugged in, the speaker is muted in receive and the phones are muted in transmit.

CW MAN-VOX jack. With the FUNCTION switch in the VOX position, the first keying pulse will close the internal relay (and antenna relay, if used) for a period of a few milliseconds up to about 1 second, depending upon the adjustment of the VOX Relay Release Time potentiometer. BE SURE TO RETARD THE QT CONTROL WHEN USING VOX CW. THIS WILL PERMIT A LONGER DELAY TIME. With the FUNCTION switch in the MANUAL position, the relays remain closed and only the blocking bias is keyed. Receiver remains muted.

CW STBY jack. Keys blocking bias only. Receiver is not muted and antenna relay will not operate. A TR switch, manually operated antenna switch, or separate receiving antenna must be used.

CW PTT jack. Keys the internal relay (and antenna relay, if used) for instant positive break-in operation.

RECVR OUTPUT socket. Remove the leads from the secondary of the receiver output transformer and solder them to the 2 terminal Jones RECVR VC cable type socket. An internal 2 watt 10 ohm resistor is connected across these terminals internally for use with 3 to 8 ohm speakers. Replace with 1000 ohms for 600 ohm outputs, and 10,000 ohms for 5000 ohm outputs. Pin 1 is internally grounded. Insert the plug in the 200V.

SPEAKER V.C. socket. Solder the speaker voice coil leads to the 2 prong Jones plug, and insert into the 200V. Pin #1 is grounded internally.

MIC connector. For high impedance microphones, down to -55db. Microphones with essentially flat response should be used. Use Amphenol #75MC1F Plug.

BIAS jack. Requires 3 circuit plug, provides -200V DC blocking bias for keying external linear amplifiers. If an external antenna relay is used, connect its auxiliary "make" contacts to the "tip" and "ring" circuit of the bias plug. Connect the "positive" end of a "floating" bias supply to the tip circuit of the plug. In this way the -200V DC will add to the normal operating bias of the linear amplifier during standby. The VOX relay will ground the tip circuit after the antenna relay has closed, restoring the bias to normal during transmit. The -200V DC can not be used as a source of operating bias for an external linear amplifier.

FSK-1 jack. For FSK keying direct from teletype keyboard, requires no current. CAUTION: Do not apply any voltage to the FSK jacks.

FSK-2 jack. For FSK keying as above, but produces opposite deviation. Polar relay can be used to feed either jack and reversal is then done by Polar Relay Reversal Switch, when required.

VFO IN jack. Normally connected to VFO OUT jack. For use when VFO is remotely located.

VFO OUT jack. Normally jumpered to VFO IN jack.

AF OUT jack. Provides approximately .15 volts from the cathode follower after the speech clipper and filter, to obtain trapezoid patterns for external linear amplifiers on an external oscilloscope. Can be used to drive other speech equipment such as modulators, etc.

FUSE: Type 3AB, 8 amperes.

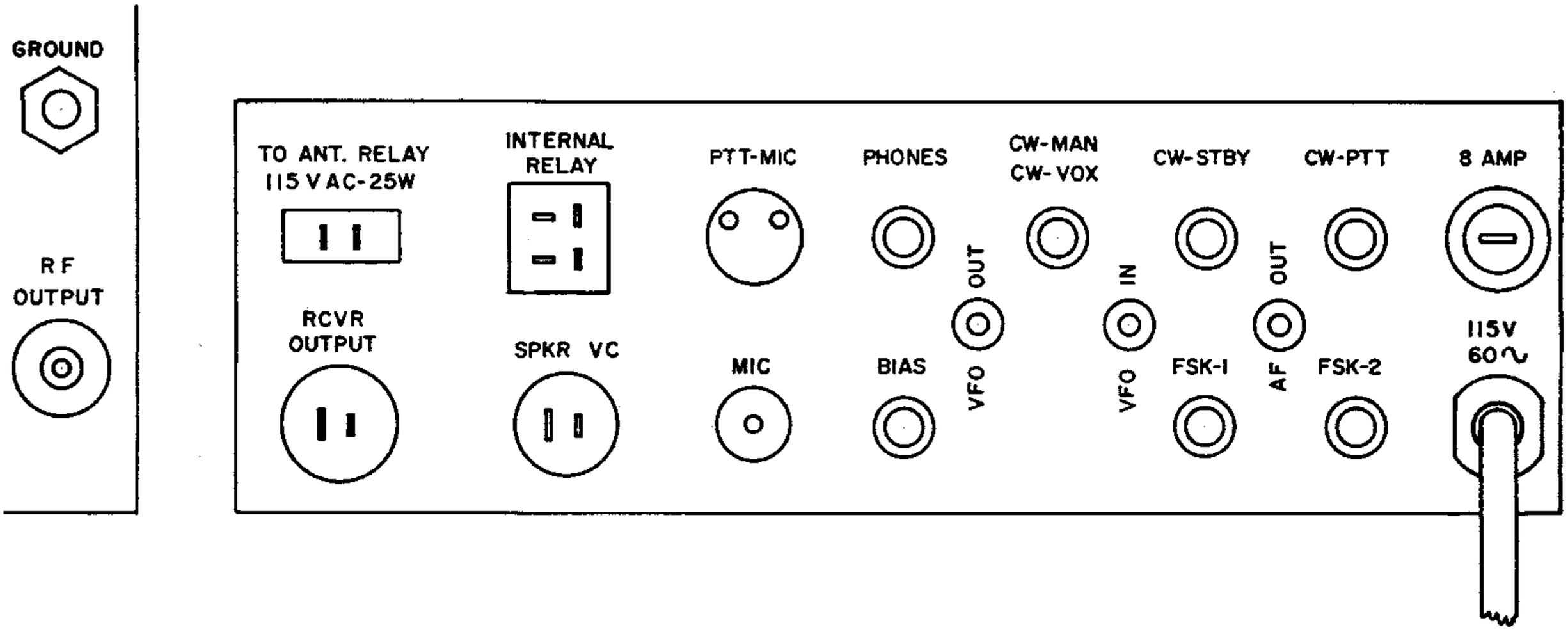

200V REAR CHASSIS CONNECTIONS

P265

Y373-P253

POWER TRANSFORMER 68-32

CAPACITOR 250MFD 450V

CAPACITOR 250MFD 450V

CAPACITOR 250MFD 450V

SILICON BRIDGE RECTIFIER C68-102

HIGH VOLTAGE CHOKE 68-33

HUM BAL R716

AM-PM-PAD

R129

PS-2

12AT7 V7

CAPACITOR 20-40-40MFD 450V

CAPACITOR 40-40 MFD 450V

8MC XTL ADJ.

PHASE INVERTER

RELAY CONTROL

12AT7 V8

AF AMP

R157

AF RATIO

68L8 V11

8MC XTL OSC

12AT7 V3

VOX AMP

VOX RELAY

12AT7 V9

AF AMP

R144

AF BAL

XTL OSC PLATE

6AL5 V5

VOX AND QT RECT.

AUDIO FILTER

6BL8 V6

12BH7 V10

MOD.

8MC RF PHASE SHIFT

8MC RF PHASE SHIFT

PLUG IN MODULATOR CAPACITORS

PLUG IN MODULATOR DIODES AND COILS

12AT7 V2

QT AMP

AUDIO LIMITER

6BL8 V4

ADJ LIM.

IND.

VOX AMP

6BL8 V1

MIC. PREAMP

47

METER LITE

VFO 6-5 MC

VFO BROAD BAND OUTPUT COUPLER

VFO TEST POINT

VFO AMP 6CB6 V18

VFO OSC 6BL8 V17

VFO LINEARITY ADJUSTMENTS

51

SCREEN OVER-CURRENT RELAY

650V BLEEDER

R613

R612

VR DROPPING RESISTOR

6550 NEUTRALIZING CAPACITOR

V16 6550 RF POWER AMPLIFIER

V15 6550 RF POWER AMPLIFIER

RF TO SCOPE

G

R611 METER ADJ.

WATTS IN

SCOPE WIDTH

R456

AF TO SCOPE

6BL8 V21

8MC AMP

HORIZ. AMP

DRIVER

10 15 20 40 80 X

BUFFER DOUBLER

12-10 MC 12-10 MC 6-5 MC 12-10 MC

BUFFER DOUBLER

6BQ5 V14

DRIVER

SCOPE POWER SOCKET

VFO INPUT

6CB6 V20

2ND MIXER

10 15 20 40 80 X

TRIPLE TRAP COIL

XTL OSC

X 80 40 20 15 10

6EJ7 V13

2ND MIXER

0A2 V26

VOLTAGE REG

6A84 V19

1ST MIXER

39.7 MC 14-13 MC 19.5 MC 14-13 MC

CX6 CX5 CX4 CX3 CX2 CX1

6EH7 V12

1ST MIXER

8MC-SB GEN TO MIXER

R404

R418

R415

R419

1ST MXR. CATH.

2ND MXR. S.G.

2AP1 V22

R401

R421

R422

EL84/6BQ5 6550 BIAS

2ND MXR. CATH.

2ND MXR. GRID BIAS 10X ONLY

◎ = TEST POINT JACK

✳ = PRESS DOWN & TO THE LEFT TO RELEASE

R 305 FOCUS

INTENSITY R 307

MODEL 200V TOP VIEW

CENTRAL ELECTRONICS, INCORPORATED

SECTION V

OPERATION

The following adjustments are required for all types of operation and should be made in the following sequence.

1. SINGLE SIDEBAND SUPPRESSED CARRIER ADJUSTMENT:

An antenna or dummy load (100 watts) must be connected to the RF output. When using an antenna, use a frequency or band where SWR is lowest. Be sure the POWER OUTPUT potentiometer located behind the right door is turned to about 12 o'clock.

Turn the FUNCTION switch to STANDBY, the EMISSION switch to LSB (lower sideband) the Bandswitch and VFO to desired frequency. Allow a few minutes for the unit to warm up. Adjust the Carrier NULL controls for minimum carrier as indicated on the scope or in your receiver. With the EMISSION switch in one of the SB positions and the OPERATION switch on MANUAL advance the Speech Level control until the LIMITER indicator light only flashes occasionally during average speech. With only an occasional flash, there will be about 3 db. of speech clipping and this is the maximum that should be employed for normal operation. Under adverse transmitting conditions when reception is weak or interference exists, the speech level may be increased to the point where the indicator flashes rapidly or sometimes remains on continuously, although weak. At this setting (about 10 db. clipping) there will be an appreciable increase in intelligibility at the receiving end with a tolerable amount of distortion and no "splatter". Increasing the speech level to the point where the indicator lights brightly (about 20 db. clipping) will result in excessive distortion and loss of intelligibility. Each division on the Speech Level scale indicates 6 db., approximately. Now adjust the Power Output control until maximum scope height is obtained without flat-topping.

With the FUNCTION switch in the VOX position, advance the VOX gain control to the point where consonants will operate the relay reliably. For example, the "f" in "four" should operate the relay consistently.

Now adjust the relay RELEASE time potentiometer so that it will not release between consecutive words in a sentence under average speech.

With a loud heterodyne or other signal from the loudspeaker, advance the QT potentiometer to the point where the relay will not trip. For this adjustment, the microphone and loudspeaker must be in their normal operating position. Avoid placing the speaker in a position where the sound strikes the microphone directly.

2. AMPLITUDE MODULATION ADJUSTMENT:

With the EMISSION switch on AM and the FUNCTION switch on MANUAL, adjust the AM carrier potentiometer (behind the left door) for 100 watts input, or at the level where a proper trapezoid is obtained. Under average speech there should only be a perceptible upward movement on the power input meter. Any appreciable movement of the meter while operating with carrier types of transmission (AM, USC, LSC,) indicates overloading of the final amplifier, and will give distortion.

The speech level has been adjusted to the proper value under the SSB adjustment, and is automatically reduced 6 db. by the EMISSION switch for proper AM linear operation. Once these levels have been determined, it is possible to change any mode of operation without any further adjustment.

Minor adjustment of the Power Output control may be required from band to band to compensate for variations in load impedance, or slight differences in coil gain.

3. PM AND CW CARRIER ADJUSTMENT:

With the emission switch in the PM position and the FUNCTION switch on manual, adjust the CW CARRIER control for 175 watts input. If the control is set at a higher value, the final amplifier will draw grid current and will give a considerable increase in harmonic output which can cause TVI, while the increase in power output only amounts to about 1 db. or approximately 1/6 of an S unit on the average receiver.

In the PM position, the speech level is pre-set by the EMISSION SWITCH. Phase modulation generated by this method has the same bandwidth as amplitude modulation and is the maximum deviation permitted in the amateur bands below 29 megacycles.

200V OSCILLOSCOPE PATTERNS

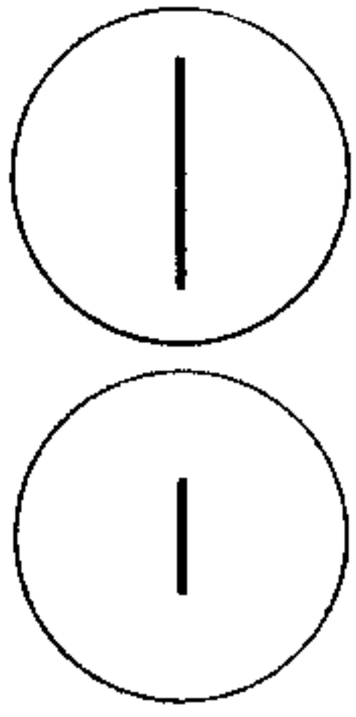

CW or FM Carrier

AM Carrier - No Modulation

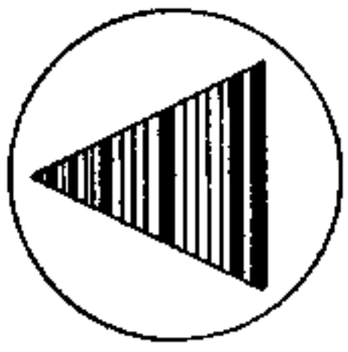

AM 100% Modulated

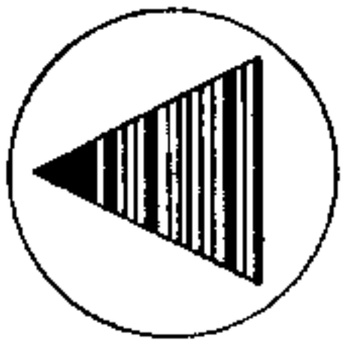

AM Over-modulated (Insufficient Carrier Insertion)
Note Bright Area at Tip

AM - Low Percentage of Modulation (Excessive Carrier Inserted)

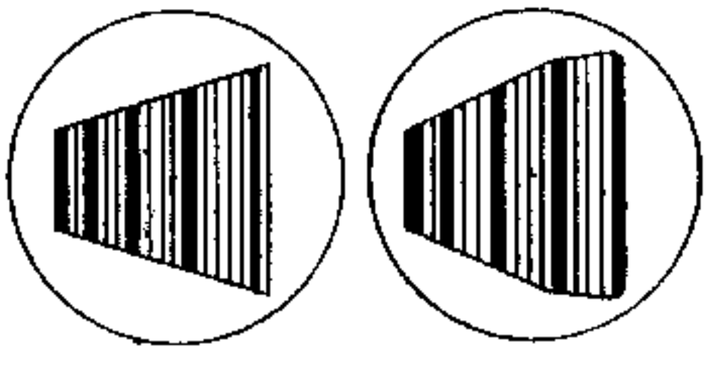

AM - Excessive Carrier Plus Flat Topping
REDUCE CARRIER AND RETARD POWER OUTPUT CONTROL

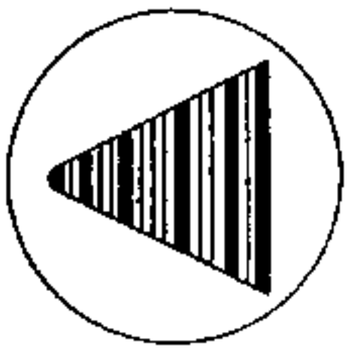

SSB Properly Modulated

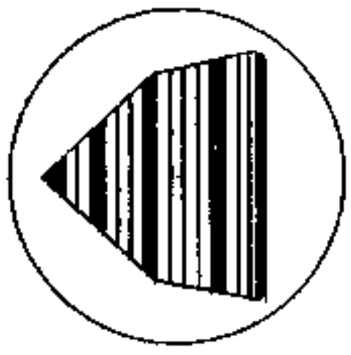

AM or SSB
1. Too much RF Drive
2. Improper Loading
When this pattern is obtained
RETARD THE POWER OUTPUT CONTROL
UNTIL A PROPER TRAPEZOID IS SECURED

200V OSCILLOSCOPE PATTERNS

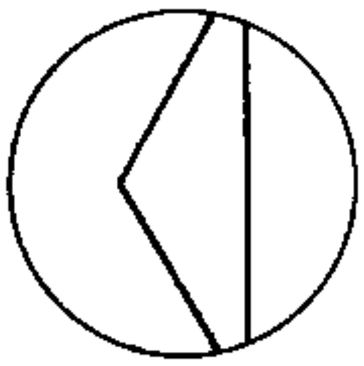

AM OR SSB
ANTENNA LOAD IMPEDANCE TOO HIGH,
OR ANTENNA OPEN.

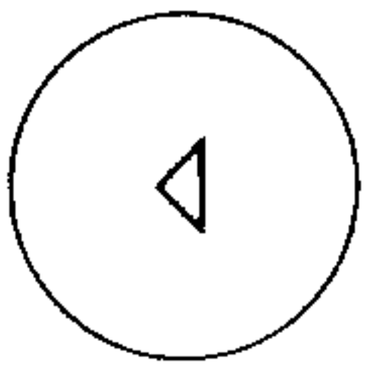

AM OR SSB
1. ANTENNA LOAD IMPEDANCE TOO LOW.
2. ANTENNA SHORTED.
3. INSUFFICIENT RF DRIVE.
4. POWER OUTPUT CONTROL RETARDED.

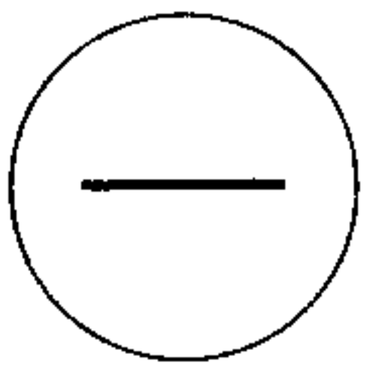

AM OR SSB
1. NO RF OUTPUT, BUT ALL CIRCUITS UP TO AND INCLUDING BALANCED MODULATOR WORKING PROPERLY.
   V12, V13, V14 OR V19 DEFECTIVE.
2. XTAL-VFO SWITCH IN XTAL POSITION WITHOUT XTAL PLUGGED IN.
3. HIGH FREQUENCY CONVERSION CRYSTAL NOT OPERATING.

SECTION VI

TELEVISION INTERFERENCE

The output of the second and higher order harmonics of the 200V are down in excess of 50 db. from full output. Ordinarily this will not create harmonic TVI in primary TV service areas. If TVI due to harmonic radiation is present, a good low pass filter should be installed.

Best results can be obtained by using the Drake Model TV100LP low pass filter, since it is very tolerant of variations in load impedance, and will not affect the operation of the broadband output coils. These filters are not furnished with the S0239 (83-1R) UHF coaxial receptacles, and these must be furnished and installed by the purchaser. Holes have been punched in the case to facilitate their installation.

It is suggested that the filter be attached to the 200V with a Dow Key DKF-2 double plug UHF coaxial coupling and an 83-1AP (UG646/U) 90 degree adapter, so that the filter will not extend too far beyond the chassis.

Many low pass filters cannot be installed directly at the 200V RF output receptacle, since some lumped values of capacitance and inductance may seriously affect the operation and loading of the broadband output coils. When other filters are used, it will be necessary to use a few feet of coaxial cable between the 200V and the filter. In some instances it is possible that this short length of cable will resonate the 200V output circuit at some TV frequency and cause TVI.

It is very important that the final amplifier is not driven to the region of grid current or flat-topping. Whenever grid current flows the harmonic output increases considerably and is almost certain to create TVI. In cases where harmonic TVI persists even after a low pass filter is installed, it may be necessary to retard the POWER OUTPUT control slightly to insure that the final amplifier tubes are operating in the linear portion of their Eg/Ip curve.

If the 200V is connected to an antenna that has an appreciable standing wave ratio, the final amplifier will "flat-top" and generate strong harmonics at values below the rated maximum input, so it is essential that the SWR be kept as low as possible. If it is not practical to reduce the SWR, retard the Power Output control.

CAUTION: Most commercially available TR switches will increase TVI.

Many TR switches will also degrade the signal to noise ratio in the receiver in addition to the loss due to the RF absorption by the tuned circuit in the transmitter.

TVI may be caused by an antenna relay in which the antenna contacts are subject to RF arcing due to improper timing sequence of the auxiliary contacts, SWR meters and other devices which contain diodes. The TVI from rectifying devices can usually be reduced by using a low pass filter between the unit containing the rectifier element and the antenna.

The auxiliary contacts on the antenna relay should be adjusted so that the bias contacts close after the antenna contacts do, when the relay is energized.

OPERATING NOTES

1. FLAT TOPPING. When the trapezoid indicates flat topping while operating on SSB, DSB or AM, RETARD THE POWER OUTPUT CONTROL. Specifications allow for some reserve RF driving power to allow for tube aging. When the 200V is operated into an excessively high load impedance, it will be necessary to further reduce the control. The correct power output control setting can be determined by talking into the microphone with full speech gain until the limiter indicator lights, and adjusting the power output control for a proper trapezoid. Remember that the trapezoid only indicates the linearity of the stages between the balanced modulator and the antenna. It does not show audio distortion or speech clipping in this equipment.

If there is an appreciable departure from the original height when the 2AP1 tube is changed, it will be necessary to change the value of the RF coupling capacitor, C404.

2. REDUCING LOW FREQUENCY RESPONSE IN THE SPEECH AMPLIFIER. Operators that have an unusually deep voice may prefer to reduce the low frequency response of the 200V. When this is desirable, C201A, a .005 mfd. ceramic capacitor should be removed at the input circuit of V1B. C201, 500 mmfd. should remain in the circuit.

3. FSK DEVIATION. If the frequency deviation is less than 850 cycles with the control at maximum, the XTAL OSC PLATE coil must be retuned. The iron core tuning slug should be tuned for maximum output first and then turned counterclockwise not more than 1/4 turn. If the slug is turned counterclockwise more than 1/4 turn, the sideband suppression will be affected. Try changing V11, since these tubes vary considerably.

4. UNDESIRABLE RELAY OPERATION CAUSED BY EMISSION SWITCH. When the FUNCTION switch is in the VOX position, the Vox Relay will operate momentarily when turning the EMISSION selector through the FSK, CW or PM positions if no key is inserted into the CW-VOX jack.

This keying pulse can be avoided by placing the selector in STANDBY or PTT when switching through these positions.

5. CALIBRATION SIGNAL WEAK. Under certain circumstances (especially when a linear amplifier is used) it may be necessary to advance the CAL LEVEL potentiometer almost to maximum in order to hear the calibrate signal in the receiver. This can sometimes cause TVI, especially when calibrate carrier is used, or distortion when vox calibrate is used. To prevent this it will be necessary to couple some of the RF output from the 100V to the receiver. This may be done by using a "T" connector at the RF output of the 200V and using a small coupling capacitor having a value of 2 or 3 micro-microfarads, or by twisting a few inches of insulated hook-up wire together and coupling to the receiver antenna input. If the receiver uses a coaxial connector, another "T" connector must be used. When possible, coaxial cable should be used for the connecting lead and it should be kept as short as possible.

6. CW-FSK MONITORING WITH EARPHONES. When high impedance headphones are used in the 200V PHONE jack for CW-FSK monitoring, a 10 ohm 2 watt resistor should be connected across the terminals at the phone plug. The resistance of the CW-FSK monitor potentiometer is approximately 500 ohms, and is quite effective when used in the low impedance circuits commonly encountered in speaker voice coil circuits. The 10 ohm terminating resistor will provide a suitable voltage divider action when comparatively high impedance headphones are used.

7. USING A KEY IN THE CW MAN-VOX JACK. When a key has been plugged into the CW MAN-VOX jack, it must be kept closed (by use of a shorting switch) when using VOX operated voice transmission such as SSB, AM, ETC.

SECTION VII

THEORY OF OPERATION

POWER SUPPLY:

A dual-voltage full wave bridge silicon rectifier type power supply is used. On both the high and low voltage supplies, a single swinging choke input filter is used with large values of output capacitance. The low voltage supply uses a single 250 mfd output capacitor, while the high voltage supply uses two 250 mfd. capacitors in series to obtain 125 mfd. at twice the operating voltage. One of the capacitors in the high voltage filter has its case insulated from the chassis, and is covered with an insulating sleeve to avoid the possibility of electrical shock. Three silicon diodes are used in series across the input choke to clamp high voltage pulses resulting from switching and line voltage surges. Replacement silicon rectifiers can be obtained from Central Electronics, Inc., Part Number C88-102.

Negative operating and blocking bias is obtained from a separate winding on the transformer, using a half wave selenium rectifier.

MICROPHONE PREAMPLIFIER:

The pentode section of a 6BL8 tube, V1A, is used as the microphone preamplifier. An R-C radio frequency filter is used at the input grid circuit. The output of this stage is applied to the MIC GAIN and QT gain controls. NOTE: In order to reduce hum pick-up caused by chassis currents, the cathode and grid return circuits of V1A are grounded at the microphone connectors only.

PLUG-IN AUDIO LIMITER MODULE:

The arm of the MIC GAIN potentiometer goes to the grid of the triode section of 6BL8 V4A, located on the Audio Limiter plug-in module. Speech limiting takes place in the plate circuit by utilizing a pair of battery biased DI-52 diodes connected as a full wave shunt rectifier, which limits the output to about 1.4 volts. The diode return circuit goes through the primary of an audio transformer to drive the pentode indicator amplifier. Some of the output voltage is fed back to the triode grid to obtain inverse feedback, which begins when the diodes start to conduct. Application of inverse feedback considerably reduces the distortion generated by the diodes in the plate circuit.

V4B, the pentode section of the 6BL8 reflex amplifier operates the LIMITER indicator. Some of the output voltage is rectified by a DI-52 diode, lightly filtered and applied as positive low frequency pulses to the grid circuit. By this means the sensitivity is greatly increased at the lower speech levels and the low frequency pulses are responsible for the "flicker" in the indicator at the point where limiting begins.

The ADJ. LIMITER IND. potentiometer, which is accessible through the top of the can, controls the gain of this stage. If the module should become inoperative for any reason, temporary operation may be resumed by removing the module and installing a jumper between pins 2 and 6 on the socket. NOTE: NEVER USE THE LIMITER WITHOUT THE FILTER.

PLUG-IN AUDIO FILTER MODULE:

This module contains two bridged T networks and six full T networks. Each section of 6BL8, V6, is used as an amplifier to provide a constant level between the input and output terminals. BT1 is a high pass audio filter and BT2 is a low pass audio filter. T1 and T2 are inserted in an inverse feedback loop between the plate and grid circuits of V6B and are "peaking" circuits at 4000 and 200 cycles, respectively. T3, T4, T5 and T6 are rejection circuits at 7000, 60, 5200 and 90 cycles. This combination of 8 networks provides a steep sided band pass filter between 200 and 3500 cycles which is devoid of dynamic "ringing" distortion inherent in torroid, crystal or mechanical filters. In addition to reducing the distortion products generated by the Inverse Limiter and narrowing the bandwidth of all types of phone emission, the filter greatly attenuates speech components which fall beyond the effective range of the audio frequency phase shift network. By this means the sideband suppression is maintained at -50 db. throughout the normal voice range, in spite of the large degree of speech limiting.

If the Audio Filter module should become inoperative for any reason, the 200V can be operated with the Audio Limiter and Audio Filter removed. Install a jumper between terminal 2 of the Audio Limiter socket and terminal 5 of the Audio Filter socket. NOTE: Although the equipment will operate with only the Audio Filter removed and a jumper installed between terminals 2 and 5 of the socket, the 200V should never be operated with the Audio Limiter alone.

VOX AMPLIFIER AND VOX RECTIFIER:

The Vox Amplifier amplifies the voice signal so that it may be used to operate the Vox relay. The triode section of a 6BL8 and one-half of a 12AT7 are used, V1A and V3A. The output is rectified by one-half 6AL5 Vox Rectifier V5 and this positive voltage operates the grid of the Relay Control tube.

QT AMPLIFIER AND QT RECTIFIER:

The purpose of the QT Amplifier is to prevent loudspeaker signals which are picked up by the microphone from operating the VOX relay. Both sections of 12AT7 V2 amplify the voltage from the receiver output transformer which is applied to ½ 6AL5 QT Rectifier, V5. This negative blocking bias is connected in series with the plate return of the VOX Rectifier and prevents rectification in the Vox Rectifier. When the gain of the two amplifier systems is correctly proportioned, loudspeaker signals will not operate the VOX relay. Refer to the Simplified Schematic of VOX and QT circuits.

RELAY CONTROL:

The VOX relay in the plate circuit of Relay Control tube V3B, ½ 12AT7, is designed to operate at 3.5 to 4.2 ma. and release at 2.5 to 3 ma.

In the STANDBY position of the FUNCTION switch, the grid of the tube is returned to ground while the cathode bias resistor and bleeder limit the plate current to a value such that the relay will not operate.

In the VOX position the grid is connected to the output of the Vox Rectifier. When the output of the Vox Rectifier reaches the proper positive value, sufficient plate current will flow to operate the relay.

When the CALIBRATE switch is in the VOICE position, the cathode circuit of the Relay Control tube is opened to prevent speech from operating the relay.

For PTT (Push-to-talk) the grid is connected to a voltage divider network that applies negative 20 volts with the key (or switch) open, and positive 25 volts with the key closed. Application of the negative voltage to the grid while the key is open provides a faster relay release time for high speed keying.

In the MANUAL position, the grid is returned to a point on the cathode resistor network that provides the proper bias to energize the relay. In the event of improper or erratic relay operation, try replacing V3.

AUDIO PHASE INVERTER:

The Audio Phase Inverter, 12AT7 V7, is driven by the output of the Audio Filter. A generous amount of inverse feedback is used to assure long term stability. By adjustment of the AF RATIO potentiometer in the cathode of the output section, equal voltages are obtained to the input of the audio phase shift network.

PS-2 DIFFERENTIAL AUDIO PHASE SHIFT NETWORK:

The PS-2 is designed to provide 50 db. of sideband suppression in the range of 200 to 3800 cycles. Insertion loss of this network is approximately 19 db. To compensate for variations in output load circuit tube and wiring capacitances, each output circuit of the PS-2 has been designed with approximately 20 mmfd. less capacity than required. In addition to the circuit capacitances, each terminal (#4 and #8) is externally shunted to ground with a small capacitor to bring the total up to the required value. Audio output voltages of the network are equal in magnitude and have a phase difference of 90°.

AF AMPLIFIER AND MODULATOR:

The two 90° audio phase shifted voltages from the network are labeled ØA and ØB for identification. Each phase is followed by two stages of triode implification with 12AT7 V8 and 12AT7 V9. Each phase is applied to the grids of the AF Modulator, 12BH7 V10, which operates as a cathode follower. Approximately 35 db. of inverse feedback is applied around each amplifier to insure low distortion, long term balance, and to minimize post-phasing distortion. Modulator tubes may be changed without affecting the sideband suppression. The largest portion of the inverse feedback is obtained by introducing some of the voltage from the Modulator cathodes back to the cathodes of V8.

Each cathode follower plate circuit has a low value plate resistor. Since the plate resistors of V8 and V9 derive their plate voltage from the plate of V10, rather than from the B supply, a small amount of negative feedback is applied from V10 to V9, and an equal amount of positive feedback is applied from V10 to V8. This arrangement stabilizes each phase channel, decouples the individual stages and decouples ØA from ØB.

If V8 is removed, or becomes defective, audio oscillation will occur. Audio oscillation can also be caused if either audio phase channel becomes inoperative due to a defective tube or component in this section.

INTERPRETING SWITCH DRAWINGS:

All switches are drawn as viewed from the rear. Section 1 is nearest the front panel. Section 2 is the second wafer from the front panel, etc. The letters F and R signify Front and Rear, and indicate the side of the wafer on which the contacts are mounted. On all Rear sections, the wipers are shown as solid lines, while all Front sections are shown with dashed lines. Some switch sections have contacts on both sides. For example: Sect. 3F means the third wafer from the front panel, the contacts face the panel and the wiper is drawn as a dashed line.

EMISSION SWITCH CIRCUITS:

Sections of the Emission switch are used as follows:

Sect. 1F. AF input to Balanced Modulator B.
Sect. 1R. AF input to Balanced Modulator A.
Sect. 2F. CW-FSK monitor circuit.
Sect. 2R. To Vox input circuit. In CW and FSK, with the key in MAN-VOX jack, applies keying pulses to Vox input circuit to operate the relay.
Sect. 3F. Switches arm of carrier Null potentiometer A to ground on SSB, and to carrier insertion controls on AM, PM, CW and FSK.
Sect. 3R. Changes audio level 6 db when going from SSB to AM or PM. Activates V11A, 8 mc. reactance tube in FSK position. Deactivates <u>speech</u> VOX in CW and FSK positions only.

LSB POSITION:

Sect. 1F. Switches audio ØB to terminal 1 of plug-in Modulator Capacitors (to balanced Modulator B).
Sect. 1R. Switches audio ØA to terminal 6 of plug-in Modulator Capacitors (to balanced Modulator A).
Sect. 2F. Open
Sect. 2R. Open
Sect. 3F. Shorts arm of Carrier Null potentiometer A to ground.
Sect. 3R. Shorts AM-PM 6 db pad to ground to obtain full speech level for SSB.

USB POSITION:

Sect. 1F. Switches audio ØA to terminal 1 of plug-in Modulator Capacitors (to balanced Modulator B)
Sect. 1R. Switches audio ØB to terminal 6 of plug-in Modulator Capacitors (to balanced Modulator A).
Sect. 2F. Open.
Sect. 2R. Open.
Sect. 3F. Shorts arm of Carrier Null potentiometer A to ground.
Sect. 3R. Shorts AM-PM 6 db pad to ground to obtain full speech level for SSB.

AM POSITION:

Sect. 1F. Opens circuit from audio ØB and connects terminal 1 of plug-in Modulator Capacitors to positive Modulator bias.
Sect. 1R. Switches audio ØA to terminal 6 of plug-in Modulator Capacitors (to balanced Modulator A).
Sect. 2F. Open.
Sect. 2R. Open.
Sect. 3F. Connects arm of carrier Null potentiometer A to arm of AM Carrier potentiometer. The AM Carrier potentiometer furnishes a variable positive voltage to unbalance Balanced Modulator A for AM Carrier insertion. Turning AM Carrier potentiometer completely CCW until switch operates, AM-PM pad is shorted out, and carrier remains suppressed.
Sect. 3R. Open.

PM POSITION:

Sect. 1F. Switches audio ØB to terminal 1 of plug-in Modulator Capacitors (to balanced Modulator B).
Sect. 1R. Opens circuit from audio ØA, and connects terminal 6 of plug-in Modulator Capacitor to positive Modulator bias.
Sect. 2F. Open.
Sect. 2R. Open.
Sect. 3F. Connects arm of Carrier Null potentiometer A to arm of CW Carrier potentiometer. The CW Carrier potentiometer furnishes a variable positive voltage to unbalance Balanced Modulator A for PM carrier insertion.
Sect. 3R. Open.

CW POSITION:

Sect. 1F. Open.
Sect. 1R. Opens audio ØA and ØB, and switches terminals 1 and 6 of plug-in Modulator Capacitors to positive Modulator bias.

Sect. 2F. Closes CW-FSK monitor circuit.(when CW-FSK monitor control is advanced from its "OFF" position).
Sect. 2R. Applies keying pulses from CW MAN-VOX jack to VOX amplifier input when FUNCTION switch is in VOX position.
Sect. 3F. Connects arm of Carrier Null potentiometer A to arm of CW Carrier potentiometer. The CW Carrier potentiometer furnishes a variable positive voltage to unbalance Balanced Modulator A for CW carrier insertion.
Sect. 3R. Grounds speech input to Vox Amplifier.

FSK POSITION:

Sect. 1F. Same as CW Position.
Sect. 1R. Same as CW Position.
Sect. 2F. Same as CW Position.
Sect. 2R. Applies keying pulses from FSK-1 or FSK-2 jacks to VOX amplifier input when FUNCTION switch is in VOX position.
Sect. 3F. Same as CW.
Sect. 3R. Grounds speech input to VOX amplifier. Closes cathode circuit of V11A, 8 mc. Reactance Tube, for FSK operation.

FUNCTION SWITCH:

OFF POSITION:

Sect. 1F. Open.
Sect. 1R. Provides a DC return to ground for grid of V3B, Relay Control tube. Without a ground return, the relay might pulse once as switch is turned to OFF position.

STBY POSITION:

Sect. 1F. Open.
Sect. 1R. Grounds grid of V3B (Relay Control tube) to prevent operation of VOX relay. Grounds arm of Carrier Null potentiometer B.

VOX POSITION:

Sect. 1F. Connects grid of V3B (Relay Control tube) to output of V5, Vox Rectifier output.
Sect. 1R. Grounds arm of Carrier Null potentiometer B.

VOICE CALIBRATE:

Sect. 1F. Open.
Sect. 1R. Grounds arm of Carrier Null potentiometer B. Grounds grid of V3B to prevent operation of VOX relay. Grounds one end of CAL LEVEL control to provide an adjustable negative bias on mixer and amplifier stages.

CARRIER CALIBRATE:

Sect. 1F. Grounds grid of V3B (Relay Control tube) to prevent operation of VOX relay. Grounds audio at terminal 6 of audio limiter.
Sect. 1R. Grounds one end of CAL LEVEL control to provide an adjustable negative bias on mixer and amplifier stages. Removes ground connection from arm of Carrier Null potentiometer B to unbalance balanced Modulator B, to obtain carrier for calibration.

PTT POSITION:

Sect. 1F. Connects grid of V3B (Relay Control tube) to junction of R302 and R304. With PTT MIC switch open, this junction is 20 volts negative. With PTT MIC switch closed, this junction is 25 volts positive and will cause V3B to energize the relay. A key or external switch plugged into the CW PTT jack duplicates the PTT MIC action.
Sect. 1R. Grounds arm of Carrier Null potentiometer B.

MANUAL POSITION:

Sect. 1F. Connects grid of V3B (Relay Control tube) to a point on the cathode resistor network that provides the proper bias to energize the relay.
Sect. 1R. Grounds arm of Carrier Null potentiometer B.

BALANCED MODULATOR:

The balanced modulator circuit consists of two independent balanced modulators labeled A and B. Each modulator input is isolated from the modulator DC cathode bias by a pair of 6 microfarad coupling capacitors, which are contained in a plugin assembly marked MOD CAPS. In the event that ageing affects their capacity or leakage, they may easily be removed for replacement. If one capacitor develops leakage, it may result in carrier drift, or lack of ability to balance out carrier with the potentiometer. When one or both modulators are disabled for AM, PM, CW or FSK operation, these capacitors are connected to a positive dc voltage source approximately equal to the modulator cathode bias, (positive modulator bias) rather than returning to ground. This minimizes switching transients which would occur when changing mode of operation, due to discharging these large capacitors. The resistance of the Carrier Balance potentiometers is about one fourth that of the total circuit, to facilitate carrier balancing and provide a "bandspread" effect.

The matched germanium modulator diodes are mounted on a plug-in assembly to facilitate replacement. This assembly also contains the balanced modulator coil. A defective diode can result in loss of sideband suppression, carrier drift, or inability to null out carrier with the balance controls.

8 MC. CRYSTAL OSCILLATOR AND REACTANCE TUBE:

The pentode section of V11 is used as the 8 mc. master crystal oscillator. The triode section functions as a reactance tube that varies the frequency of the crystal. Frequency shift from 100 to about 900 cycles may be obtained depending on the setting of the cathode control in the triode section. Keying of the reactance tube is accomplished by shorting the 50 volt negative grid bias to ground.

8 MC. RF PHASE SHIFT CIRCUITS:

In order to obtain the differential 90° rf phase shift required for the balanced modulators, one R-L and one L-R circuit is used. One circuit provides a 45° leading voltage, while the other provides a 45° lagging voltage. The inductors are slug tuned, and the output of each circuit is applied to one balanced modulator, resulting in an overall (or differential) 90° RF phase shift between them. Both coils are identical.

VFO:

Both the triode and pentode section of 6BL8 V17 are used in a two terminal class A oscillator which is self compensating for changes in tube transconductance caused by line voltage fluctuations and ageing. The grids are operated with a regulated positive bias in relation to ground and large values of cathode resistance are used to obtain an actual negative operating grid bias. By proper selection of voltage and resistance values, automatic transconductance control is achieved. For example, if the cathode current should tend to decrease due to low filament voltage, the drop in cathode bias will result in a higher effective positive voltage on the grid, which will maintain the plate current at the original value. These characteristics make it possible to use light coupling to the tuned circuit, thereby minimizing tube capacity and Miller effect (US PATENT #2,867,725).

Regulated plate voltage is used on the oscillator, as well as the VFO amplifier, 6CB6 V18.

VFO BUFFER-DOUBLER:

6CB6 V20 is used as a buffer stage when 6 to 5 mc. output is required, and as a frequency doubler for 12 to 10 mc. On all bands except 20 and 10 meters, the 6 to 5 mc. output is applied to the cathode of the First Mixer. On 20 meters the 6 to 5 mc. output is fed to the cathode of the Second Mixer, while on 10 meters 12 to 10 mc. is applied to the cathode of the Second Mixer. Separate output couplers are used for each frequency range.

In the XTL position, the VFO-XTL switch changes the screen and control grid of V20 to a triode Pierce crystal oscillator.

In the Standby position, negative 120 volts is used to bias the control grid to cutoff when the XTAL-VFO switch is in the VFO position. In the XTAL position, no blocking bias is applied and the crystal oscillates continuously.

A test prod jack is available on top of the chassis for measurement of the dc and rf voltages appearing at the control grid of V20.

HIGH FREQUENCY CRYSTAL OSCILLATOR:

V19, a 6AB4 triode is used in a grounded grid, series mode, third overtone crystal oscillator circuit in which the crystal is connected between plate and cathode. The plate circuit is tuned to the desired overtone frequency. Frequency correction can be obtained by adjusting the HF XTAL OSC plate tuning slug, with very little change in power output. Detuning the slug too far may result in sluggish or erratic crystal operation, and complete loss of RF output power. The output of this stage is applied to either the cathode of the First Mixer or the cathode of the Second Mixer, depending upon the band in use. This oscillator operates continuously, to avoid instability and keying chirp.

FIRST MIXER:

The 50 ohm rf output of the Balanced Modulator is fed through the POWER OUTPUT control to the coil marked 8 MC SB GEN TO MIXER, where the impedance is transformed to 5000 ohms and connected to the First Mixer grid. On all amateur bands except 20 and 10 meters the 6 to 5 mc. output of the VFO Buffer-Doubler stage V20 is applied to the cathode of V12. For 20 meter operation 27.5 mc. crystal controlled cathode injection is used, while on 10 meters 47.7 mc. is used. On these two bands, the output of the VFO Buffer-Doubler is applied to the cathode of the Second Mixer.

In the 200V plug-in coil assemblies are labeled according to the plate circuit in which the assembly is used. For example, Second Mixer indicates that the assembly contains the plate coils for the second mixer and the grid coils for the following stage.

The First Mixer plate and Second Mixer grid circuits are tuned as follows on the amateur bands:

160M	14-13 mc. broad band
80M	14-13 mc. broad band
40M	14-13 mc. broad band
20M	19.5 mc. narrow band
15M	14-13 mc. broad band
10M	39.7 mc. narrow band

Four tuned circuits (two separate assemblies cascaded) are used in the 14-13 mc. broad band range to obtain steep sided skirt selectivity.

In the standby position negative 120 volts is used to bias the control grid of the First Mixer to cutoff, on 15, 40, 80 and X bands.

Two test prod jacks are available on top of the chassis for measuring the dc and rf voltages at the grid and cathode.

SECOND MIXER:

Plug-in broadband couplers are used in the plate circuit of the Second Mixer 6EJ7 V13, and are tuned to the operating frequency. The following cathode injection frequencies are used for the amateur bands:

160M	15.5 mc. crystal controlled
80M	17.5 mc. crystal controlled
40M	20.5 mc. crystal controlled
20M	6-5 mc. VFO
15M	34.5 mc. crystal controlled
10M	12-10 mc. (VFO times 2)

In the standby position negative 120 volts is used to bias the control grid to cutoff, on 10 and 20 meters only.

Two test prod jacks are available on top of the chassis for measuring the dc and rf voltages at the grid and cathode.

RF DRIVER:

The RF Driver 6BQ5 V14 is an ultralinear beam power amplifier designed to furnish a large amount of class A power with low distortion as compared to other tubes in the same plate dissipation class (12 watts). This stage is neutralized by means of a capacitive divider between the plate of the tube, the grid return circuit, and ground. A negative operating bias of approximately 14 volts is obtained from a voltage divider across the negative 100 volt dc supply. Plug-in Broadband rf couplers are used in the plate circuit. A potentiometer R421 on left side of chassis adjusts this bias voltage.

In the Standby position, negative 120 volts dc is used to bias the control grid to cutoff.

Two test prod jacks are available on the top of the chassis for measuring the dc and rf voltages at the grid or the dc cathode current. The dc voltage drop across a 10 ohm bypassed cathode resistor can be used to determine the cathode current. I = E/10, therefore .40 volts would indicate 40 milliamperes of cathode current, etc.

RF POWER AMPLIFIER:

Two ultra linear 6550 beam power tubes, V15 and V16, are connected in parallel and furnish 100 watts of class AB1 rf power output with low distortion. This stage is neutralized by means of a capacitive divider between the plate, the grid return circuit and ground. To eliminate the possibility of parasitic oscillation, 15 ohm carbon resistors are used in series with each grid, and parasitic suppressors are used in series with each plate. The broadband 6550 plate couplers are plug-in. A negative operating bias of approximately 39 volts is obtained from a voltage divider across the negative 100 volt dc supply. Potentiometer R422 on left side of chassis adjusts the bias voltage. It should be set for 50 to 60 watts input on the meter with no RF drive. When the screen current becomes excessive due to a serious mismatch in the output load circuit, resulting from high SWR, an open or shorted antenna circuit, the contacts of the relay will intermittently apply negative 100 volts blocking bias to the 6550's. At this time the neon MISMATCH indicator will light and the relay will provide an audible alarm.

In the Standby position, negative 120 volts is used to bias the control grids to cutoff. A test prod jack is available on top of the chassis for measuring the dc and rf voltages appearing at the control grids. The voltage drop across a cathode resistance of $\frac{1}{2}$ ohm is used for operating the WATTS INPUT scale on the meter. An adjustable rheostat labeled WATTS IN is used for meter calibration.

NEUTRALIZING THE POWER AMPLIFIER:

CAUTION: DANGEROUS HIGH VOLTAGES are present on the bandswitch, coils and other components underneath the chassis, as well as the bleeder resistors in the 6550 compartment. Use extreme caution when working near exposed wiring.

Should re-neutralization be required, turn the POWER OFF and allow the filter capacitors to discharge. Remove the small 4-prong Amphenol plug located underneath the chassis on the vertical shield between the 6550 plate coils and the low level rf section.

A sensitive rf indicating device, such as a bypassed 0-100 microammeter in series with a diode should be connected in series with the center conductor of the S0239 rf output receptacle and ground.

With the FUNCTION switch on MANUAL, the BAND switch on 10 meters and the EMISSION switch on CW (with full carrier inserted) adjust the 6550 NEUT capacitor for minimum rf output. Be sure the Amphenol plug is removed, otherwise the meter will become damaged.

After neutralization, turn the POWER OFF, allow the filter capacitors to discharge, and insert the plug into the socket again. Be sure to remove the meter from the output circuit and connect the load circuit before applying power again.

8 MC. AMPLIFIER:

V21A, the triode section of a 6BL8 is used as an 8 mc RF amplifier, and the output is demodulated by a germanium diode to furnish a horizontal sweep audio voltage for the oscilloscope. The output impedance of the Balanced Modulator is approximately 50 ohms, and at this impedance the rf voltage is quite low, about 0.1 volt. To obtain a higher rf voltage, connection is made to the control grid of the First Mixer, where the 50 ohm output of the Balanced Modulator has been transformed to a higher impedance.

HORIZONTAL AMPLIFIER:

V21B, the pentode section of a 6BL8 amplifies the output of the 8 mc. demodulator, which is applied to the horizontal plates of the oscilloscope. The SCOPE WIDTH potentiometer, connected in the control grid circuit, is located at the rear of the low level rf chassis and is used to obtain the desired pattern width.

2 INCH MONITORING OSCILLOSCOPE:

The 2 inch cathode ray tube V22 provides a visual check of the linearity of all stages from the Balanced Modulator to the rf output receptacle.

The rf output of the Balanced Modulator is demodulated, amplified and applied to the horizontal plates of the cathode ray tube. The rf output from the 6550 Power Amplifier is capacitively coupled to the vertical plates. A trapezoid pattern will be displayed in all speech positions except PM, where only a vertical line is furnished. CW and single tone SSB will appear as a single vertical line.

In the Standby position, negative 120 volts is applied to G1 (intensity grid) to remove the pattern from the screen.

SIMPLIFIED SCHEMATIC OF VOX & QT CIRCUITS

MODEL 200V

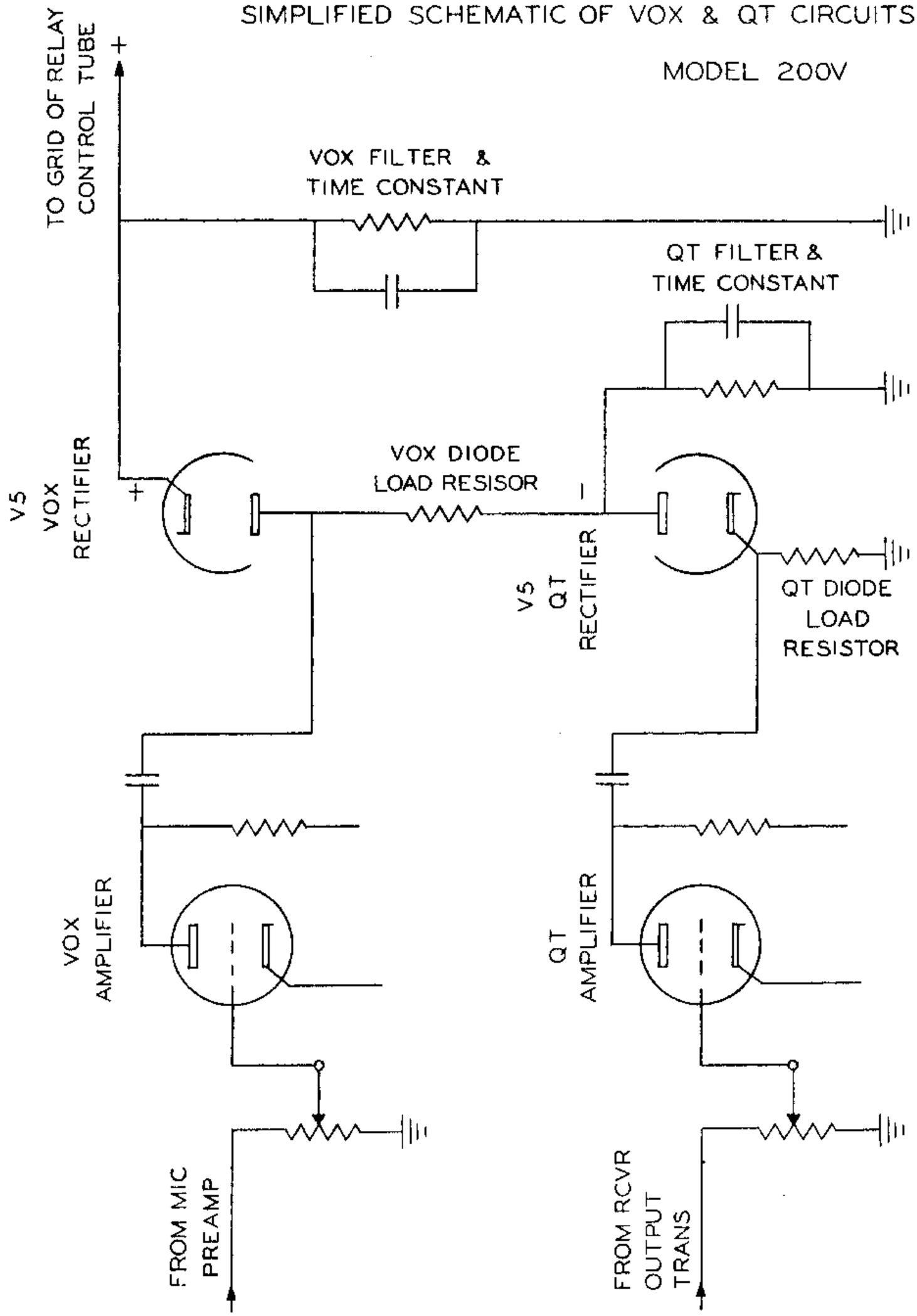

PRINTED IN USA

MODEL 200V SIMPLIFIED BLOCKING BIAS, OPERATING BIAS & CALIBRATE CIRCUITS.

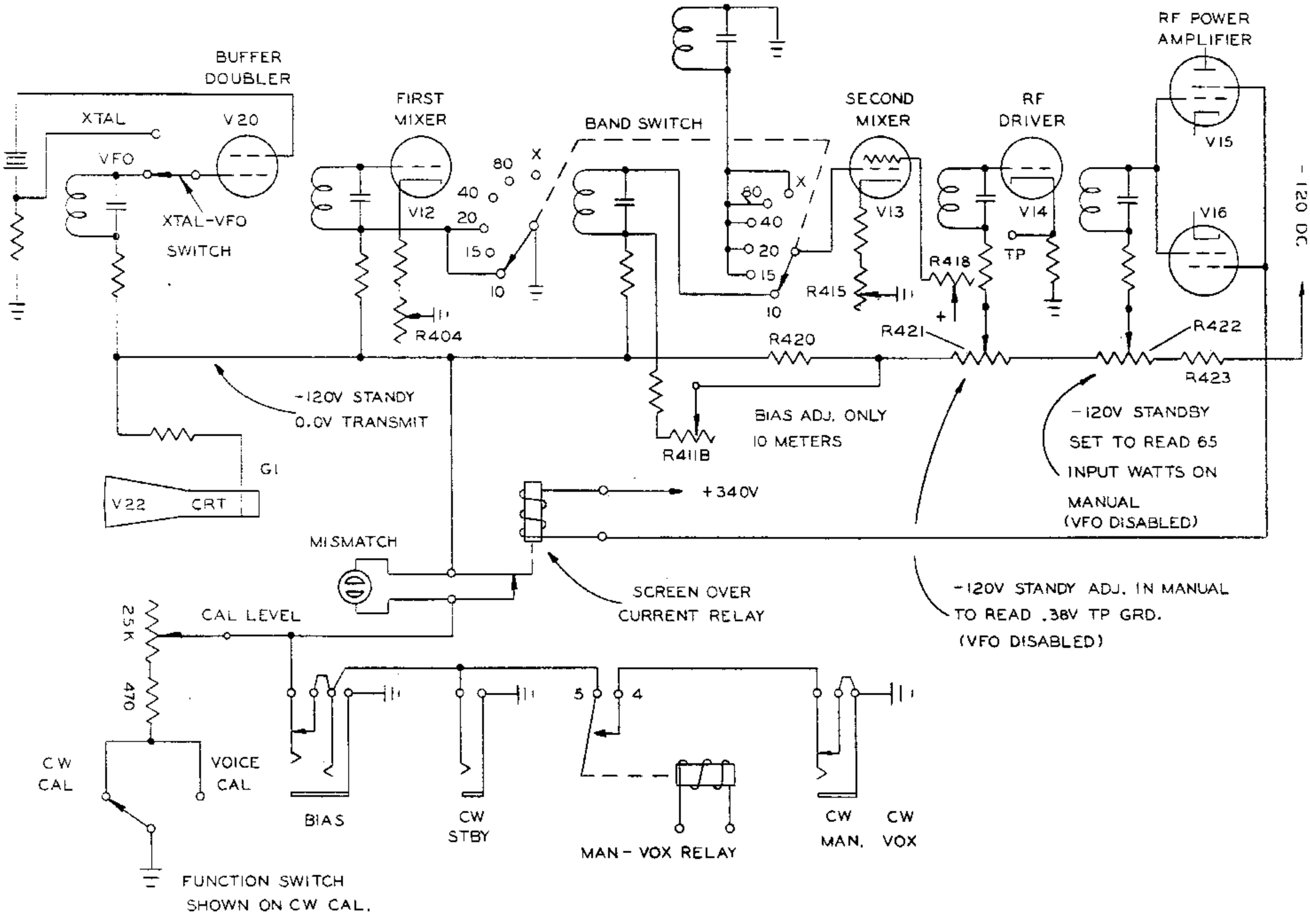

CENTRAL ELECTRONICS, INCORPORATED

RELAY SHOWN ENERGIZED
(TRANSMIT)

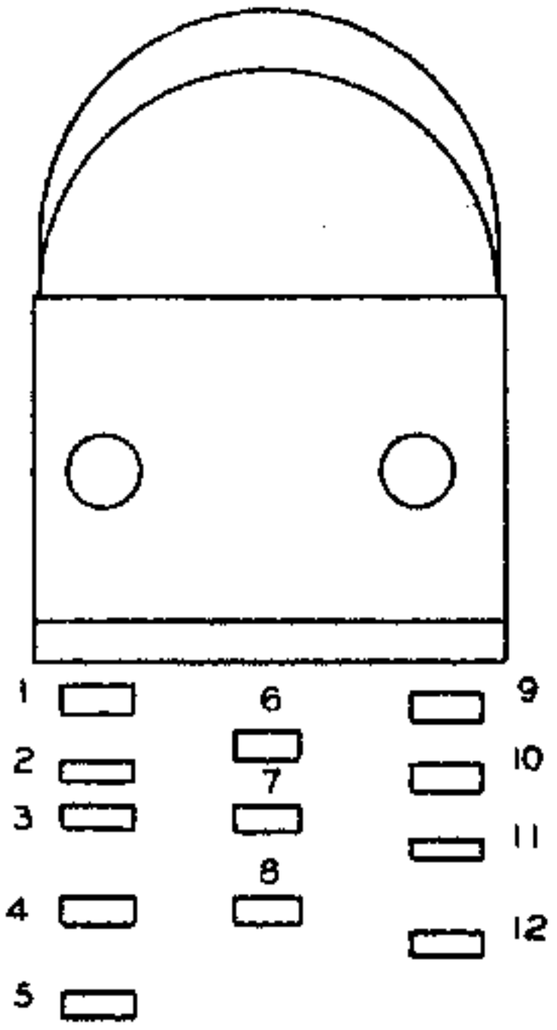

BOTTOM VIEW

CONTACTS

2 and 3	In series with speaker voice coil. Closed in receive.
4 and 5	Grounds -120V DC blocking bias in transmit.
6 and 7	NOT USED.
7 and 8	NOT USED.
10,11,12	To 3, 4, and 1 respectively on INTERNAL RELAY socket on rear of chassis.

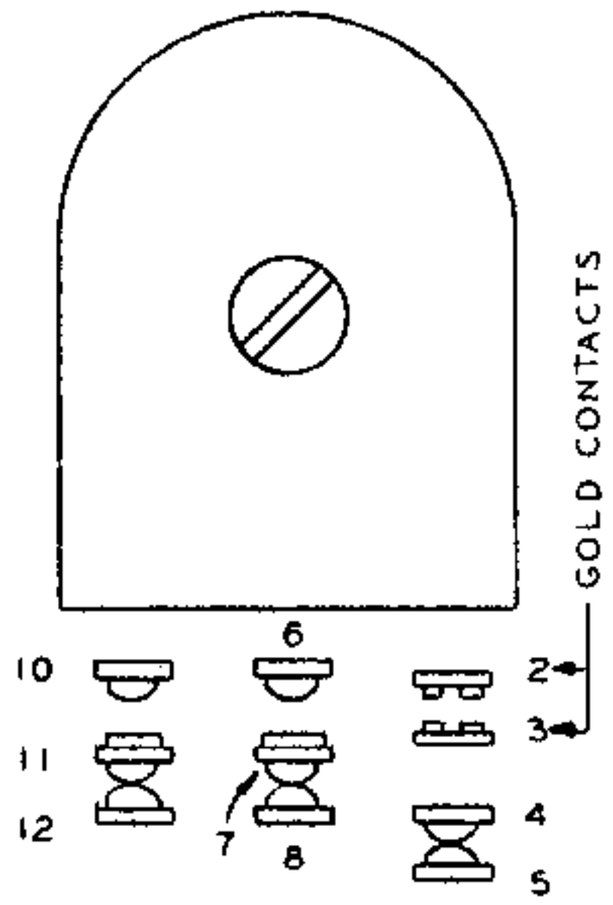

TOP VIEW

RELAY DIAGRAM

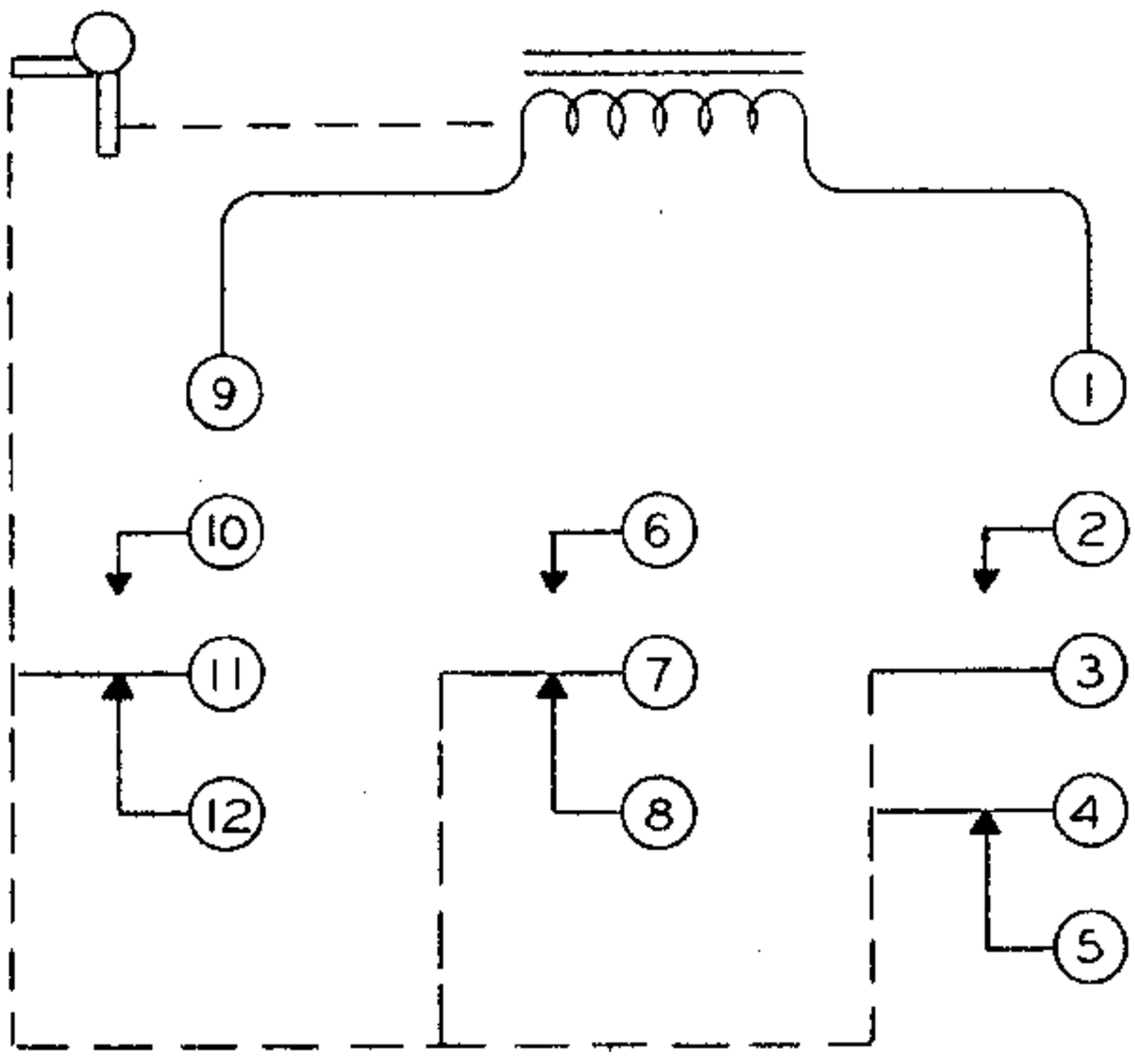

200V
3/13/61
Printed in USA

200V BLOCK DIAGRAM

CENTRAL ELECTRONICS INC.

P251

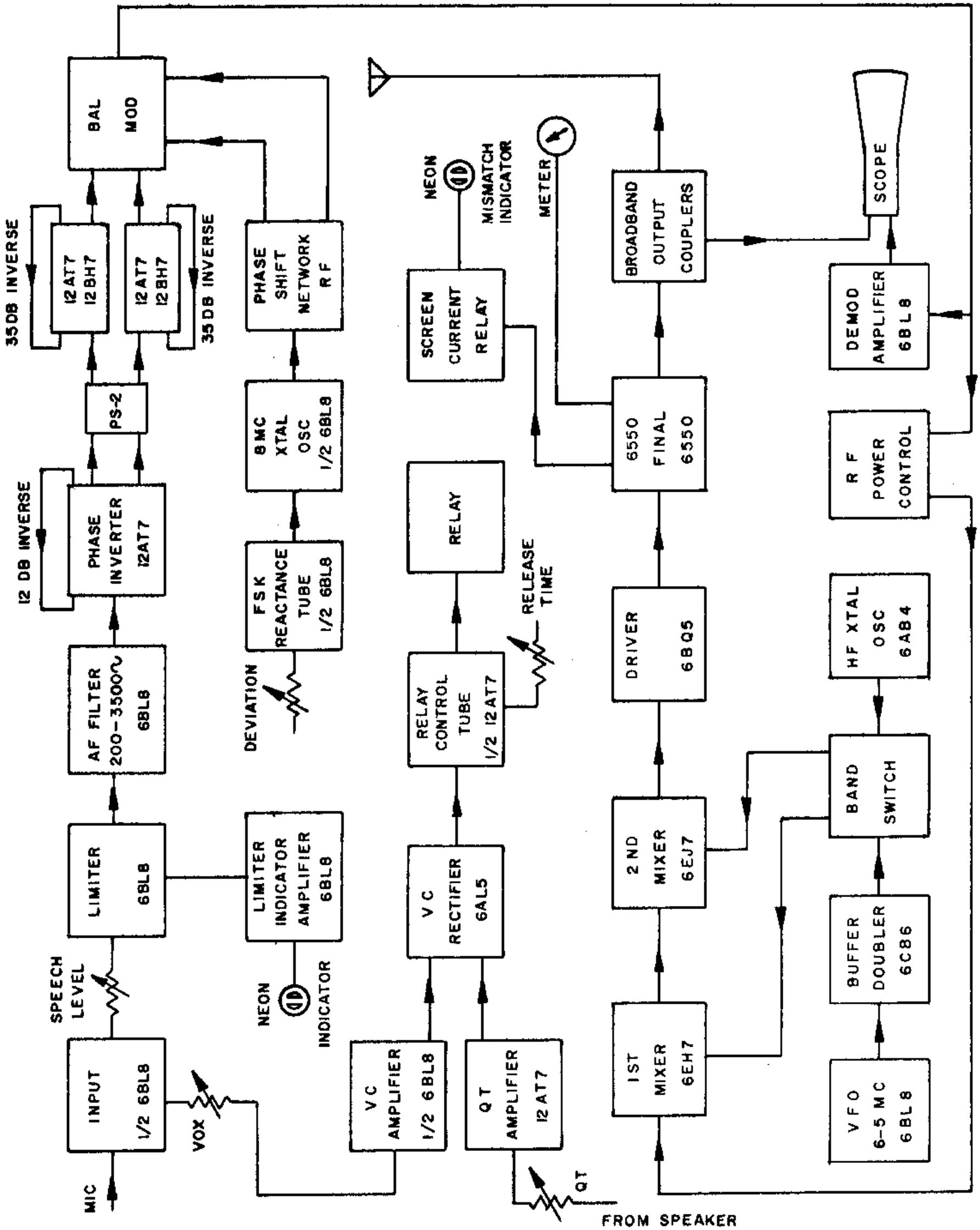

CALIBRATE LEVEL CIRCUIT:

When the Calibrate Knob is in either VOICE or CARRIER position, the CALIBRATE LEVEL potentiometer will vary the blocking bias from negative 70 volts down to zero, to provide a signal in the receiver for frequency spotting.

VOICE calibration allows you to "talk yourself on frequency" on SSB and DSB by slowly tuning the VFO until your voice sounds natural in the receiver. When the CALIBRATE Knob is in the VOICE position, speech will not energize the VOX relay.

In CARRIER calibrate, the modulator system is disabled and a small fixed positive bias is applied to Balanced Modulator B to furnish calibrating carrier regardless of the type of emission.

TUBE COMPLIMENT:

V1A		6BL8	(T)	VOX Amplifier
V1B		6BL8	(P)	Microphone Preamplifier
V2A	½	12AT7		QT Amplifier
V2B	½	12AT7		QT Amplifier
V3A	½	12AT7		VOX Amplifier
V3B	½	12AT7		Relay Control
V4A		6BL8	(T)	Inverse Limiter
V4B		6BL8	(P)	Reflex Amplifier for Limiter Indicator
V5		6AL5		VOX and QT Rectifier
V6A		6BL8	(T)	AF Amplifier (AF Filter)
V6B		6BL8	(P)	AF Amplifier (AF Filter)
V7A	½	12AT7		Audio Phase Inverter
V7B	½	12AT7		Audio Phase Inverter
V8A	½	12AT7		AF Amplifier
V8B	½	12AT7		AF Amplifier
V9A	½	12AT7		AF Amplifier
V9B	½	12AT7		AF Amplifier
V10A	½	12BH7		AF Modulator (Cath. Follower)
V10B	½	12BH7		AF Modulator (Cath. Follower)
V11A		6BL8	(T)	8 MC Reactance Tube
V11B		6BL8	(P)	8 MC Crystal Oscillator
V12		6EH7		First Mixer
V13		6EJ7		Second Mixer
V14		6BQ5		RF Driver
V15		6550		RF Power Amplifier
V16		6550		RF Power Amplifier
V17A		6BL8	(T)	VFO Oscillator 6-5 MC
V17B		6BL8	(P)	VFO Oscillator 6-5 MC
V18		6CB6		VFO Amplifier 6-5 MC
V19		6AB4		H.F. Crystal Oscillator
V20		6CB6		VFO Buffer - Doubler
V21A		6BL8	(T)	8 MC Amplifier
V21B		6BL8	(P)	Horizontal Amplifier
V22		2AP1		Cathode Ray Oscilloscope, 2"
V23		0A2		Voltage Regulator
C88-102				Silicon Bridge Rectifier

SECTION VIII

MAINTENANCE AND REPAIR

CAUTION: DANGEROUS HIGH VOLTAGES ARE PRESENT ON THE SWITCHES, ETC. BEHIND THE FRONT PANEL, ON THE LARGE RESISTORS IN THE 6550 SHIELD COMPARTMENT, AS WELL AS COMPONENTS UNDERNEATH THE CHASSIS. USE EXTREME CAUTION WHEN WORKING ANYWHERE ON THIS EQUIPMENT WHEN THE POWER IS ON.

LOW LEVEL BROADBAND RF CIRCUITS:

Most of the low level RF circuits are broad-banded and aligned with an RF sweep generator and oscilloscope at the factory. DO NOT PEAK OR ADJUST THESE CIRCUITS WITHOUT THE PROPER TEST EQUIPMENT. Detailed alignment instructions are available upon special request. Please submit a list of test equipment you have available.

These broadband circuits include the Buffer-Doubler, Driver, Second Mixer, and First Mixer (except 19.5 mc for 20 meters and 39.7 mc for 10 meters which are normally slightly detuned to equalize their gain with respect to other bands). The high frequency XTAL OSC slugs may be adjusted for maximum output, then frequency calibration. Correct calibration will occur near maximum output. The 8 MC SB GEN. TO MIXER may also be peaked, so that when the OUTPUT control is set at 3 o'clock, the final amplifier will be driven to 180 watts input, with a 52 ohm non-inductive load.

REMOVING THE PLUG-IN AUDIO LIMITER, PLUG-IN AUDIO FILTER, OR RELAY COVER:

Press the latching clamp down about 1/8 inch (compressing the rubber) at the end near the VOX RELAY cover, then away from the shield until the hook is disengaged from the slot.

REMOVING THE PS-2:

Remove the Phillips head screw from the bracket on the chassis located between the PS-2 and the power transformer.

FAN MOTOR MAINTENANCE:

All types of fan motors should be lubricated periodically with a few drops of light machine oil to prevent them from becoming noisy.

REPLACING DEFECTIVE SECTIONS IN THE BANDSWITCH:

Bandswitch sections may be changed without disassembling any of the adjacent sections. Obtain two rods 1/8" diameter about 15" long. In an emergency, the straight sections of wire coat hangers may be used.

1. Remove the wires from the defective section.
2. Open the right panel door and remove the chains from their sprockets.
3. Remove the four screws that fasten the rectangular bandswitch mounting plate to the front of the chassis.
4. At the rear of the switch, remove the two 5-40 nuts and lockwashers.
5. Insert the two 1/8" diameter rods through the holes in the rear of the chassis and use them to push the two long 5-40 bandswitch frame screws out towards the front panel. Use equal pressure on both rods. This will push the mounting plate, indexing assembly and shaft out through the opening in the front panel. Push the rods just beyond the defective wafer, then back slightly until the wafer can be removed.
6. When pushing the plate and indexing assembly back in, be sure that the grounding spring engages the shaft at the shield between the low level rf section and the output coils.

REMOVING THE VFO:

1. Remove the 200V from the cabinet. Lay the 200V on its left side.

2. Using a screw driver, carefully remove the VFO power plug (6-prong) from the RF chassis.

3. Remove the VFO RF output (white coax) phono plug from the extension receptacle. This receptacle is taped to the wiring harness.

4. Loosen the two screw driver-slot set screws which are located inside the large dial hub, on the rear of the 100KC dial scale. DO NOT LOOSEN THE TWO ALLEN HEAD SET SCREWS LOCATED ON THE 3/4" DIAMETER SHAFT.

5. Pull the entire tuning knob assembly out of the front panel housing.

6. Remove the four Phillips Head screws which hold the four square VFO mounting posts to the front panel.

7. Remove the ball-chain from the sprocket on the right side of the drum dial.

8. Slide a large piece of newspaper between the rear of the panel and the calibrated disc and drum dials. This will prevent scratching the dials.

9. Press the lower portion of the clear fiduciary scale flat against the panel, to enable the lower two square posts to clear the fiduciary scale while "rocking" the VFO out of the top of the 100V.

When installing the VFO again, be sure to use newspaper against the back of the panel.

VFO RECALIBRATION:

When necessary, the VFO can be recalibrated right at the operating position. With the double conversion system used, the VFO is at 6 megacycles for the low frequency end of the band and 5 megacycles for the high frequency end of the band.

Using the 80 meter band (3.5 to 4.5 MC) as an example, we find that:

FIRST CONVERSION:

```
        8.000 MC Master generator frequency
plus    6.000 MC VFO frequency
       14.000 MC Conversion frequency
```

SECOND CONVERSION:

```
       17.500 MC Second conversion crystal
minus  14.000 MC First conversion frequency
        3.500 MC Output frequency (second conversion)
```

and

FIRST CONVERSION:

```
        8.000 MC Master generator frequency
plus    5.000 MC VFO frequency
       13.000 MC First conversion frequency
```

SECOND CONVERSION:

```
       17.500 MC Second conversion crystal
minus  13.000 MC First conversion frequency
        4.500 MC Output frequency (second conversion)
```

It is suggested that the VFO frequency be checked against WWV at 5 megacycles with the red pointer at the last .1 MC integral marking at the high frequency end of the scale and the kilocycle scale at Ø. RF output can be obtained at the "VFO OUT" jack on rear apron.

Remove the plug button nearest to the front panel.

Allow at least 5 minutes for the unit to warm up. Adjust the center screw (second one) for Zero beat with WWV or a secondary standard. The left screw (first one) is for 4950 KC, the second for 5000 KC, the third for 5050 KC, etc. Refer to the 200V TOP VIEW drawing.

At this time it is advisable to check the conversion crystal accuracy by listening to the output frequencies at 4.5, 7.5, 14.5, 21.5 and 29.7 MC.

On all bands except 10 meters the VFO can be corrected every 50 kilocycles if a 50 KC standard is available. If only a 100 KC standard is available, the VFO can be corrected at each 100 KC integral by adjusting the even screws (2nd, 4th, 6th, etc.), which appear in the slotted opening as the dial is turned.

DETERMINING THE PROPER CRYSTAL FOR
CRYSTAL CONTROLLED OPERATION:

Front Panel Crystal = Xl-8-Fo

Xl = Conversion Crystal MC
8 = Master Internal Generator Frequency in MC
Fo = Output Frequency in MC

For frequencies between 25.5 and 29.7 MC, the following formula applies:

$$\text{Front Panel Crystal} = \frac{Xl-8-Fo}{2}$$

CONVERSION CRYSTAL FREQUENCIES:

X1	47.7	MC	for	28.7 to 29.7	MC
X2	34.5	MC	for	20.5 to 21.5	MC
X3	27.5	MC	for	13.5 to 14.5	MC
X4	20.5	MC	for	6.5 to 7.5	MC
X5	17.5	MC	for	3.5 to 4.5	MC
X6	15.5	MC	for	1.5 to 2.5	MC
X7			EXTERNAL CRYSTAL		
X8			8.000 MC MASTER OSCILLATOR		

Crystal holders for the 200V must be type HC-6, with .093 diameter pins for FT-243 socket. If larger holders are used, the panel door will not close. Crystals for use in the front panel socket should be obtained from the Northern Engineering Company of Burlington, Wisconsin, who have a 200V test fixture so that they may be ground for a high degree of accuracy.

VFO LUBRICATION:

In order to reduce friction in the VFO mechanism, the following parts are coated with Dow-Corning #33 Heavy Consistency low temperature silicone grease:

1. Threads of the $\frac{1}{4}$-20 lead screw shaft
2. Top of the round 3/8" diameter stainless steel post
3. Bottom of the 2-56 correcting screws

These parts are accessible by removing the bottom cover of the VFO, after removing the VFO from the panel.

CATHODE RAY TUBE STATIC CHARGE DISTORTION:

Under certain conditions, especially during periods of low humidity, it is possible for static electricity to accumulate on the face of the cathode ray tube. This will seriously "warp" or "stretch" a portion of the pattern, and result in some very unusual displays.

When this exists, the face of the cathode ray tube should be washed with Tide or other similar detergent.

SIDEBAND SUPPRESSION ADJUSTMENT:

Before proceeding with the single sideband adjustments, it is recommended that the operator familiarize himself with the illustrations of the oscilloscope patterns shown in this manual. The ultimate objective in the single sideband alignment is to obtain a pattern containing a minimum amount of ripple when a pure sine wave is applied to the AF INPUT jack. These adjustments should preferably be made at less than full output, to prevent amplifier overloading which might "wipe off" the small amount of modulation ripple.

A low distortion audio oscillator having less than 0.3% distortion should be used at a frequency anywhere between 1000 and 1500 cycles, and the level to the microphone jack should be less than 20 millivolts. When the audio oscillator has distortion in excess of 0.3% these distortion products will appear as ripple in the output waveform and can not be balanced out by the adjustments. If this is the case, the only alternative is to adjust for an equal amount of ripple in each sideband. Distortion in the speech amplifier caused by overloading or a defective tube can also produce a similar ripple. Whenever the Central Electronics MM-2 Modulation Analyzer is used as a source for the audio frequency tone be sure to adjust the feedback potentiometer, R57, to the point where oscillation is just sustained in order to keep the distortion to a minimum.

The following four adjustments determine the sideband suppression: the AF RATIO potentiometer, the AF BAL potentiometer, and the two 8 mc RF phase shift coils. Note: If the 8 mc. crystal oscillator plate coil is detuned, or the oscillator output low for any other reason, ripple will appear on the pattern. Before making the adjustments, be sure that the EMISSION switch is in either the USB or LSB position, and the RF POWER OUTPUT control is at maximum.

Adjust the carrier balance potentiometers for minimum carrier output as indicated on the scope. Advance the SPEECH LEVEL control until about two thirds maximum output is obtained on the oscilloscope. At no time should the speech amplifier be driven to the point where the Audio Limiter is operating. If a noticeable amount of ripple is present in the oscilloscope, try adjusting the AF RATIO and AF BAL potentiometers first.

The most satisfactory method of adjustment is to leave the EMISSION switch in the sideband position which indicates the largest amount of ripple, then slowly turn the AF adjustments until the amount of ripple is reduced to half the original value. In other words, try "splitting the difference" each time an adjustment is made and then switch to the opposite sideband and try, if possible, to reduce the ripple again. During the adjustment process it will be necessary to switch sidebands several times. In many cases it will be found that if the ripple is completely eliminated at one time while adjusting one sideband, the other sideband will become worse.

If adequate suppression cannot be obtained by varying these two potentiometers, it will be necessary to adjust the RF phase shift. Each time RF phase shift adjustments are made, it will be necessary to adjust the CARRIER BALANCE controls for minimum. Be sure to switch sidebands frequently during the alignment procedure.

SIDEBAND SUPPRESSION ADJUSTMENT WITHOUT THE USE OF A SCOPE:

In an emergency, it is possible to adjust the sideband suppression using only an audio oscillator and a receiver. Only an audio oscillator with low distortion should be used, set to approximately 1000 cycles.

The receiving antenna should be removed, the BFO turned OFF and the AVC ON. Tune in the signal in the receiver.

On the 200V, the Speech Level control should be kept well below the point where the audio limiter begins to operate and the Carrier Balance controls adjusted for MINIMUM carrier at all times.

Remember that with sine wave input, a pure SSB signal has NO modulation ripple and resembles a CW carrier. With the FUNCTION switch on LSB or USB, adjust the AF BAL and AF RATIO potentiometers for MINIMUM modulation in the receiver. Minimum modulation corresponds to maximum sideband suppression. During adjustment, switch sidebands frequently to see that the suppression in both sidebands is improving. If it is necessary to adjust the 8 mc. RF phase shift circuits, be sure to balance out the carrier after each adjustment. Audio or rf unbalance will provide a 2000 cycle tone, while carrier will result in a 1000 cycle tone. It may not be possible to eliminate the modulation entirely due to the distortion in the average audio oscillator.

CENTRAL ELECTRONICS INC.

200V SIDEBAND ALIGNMENT

P264

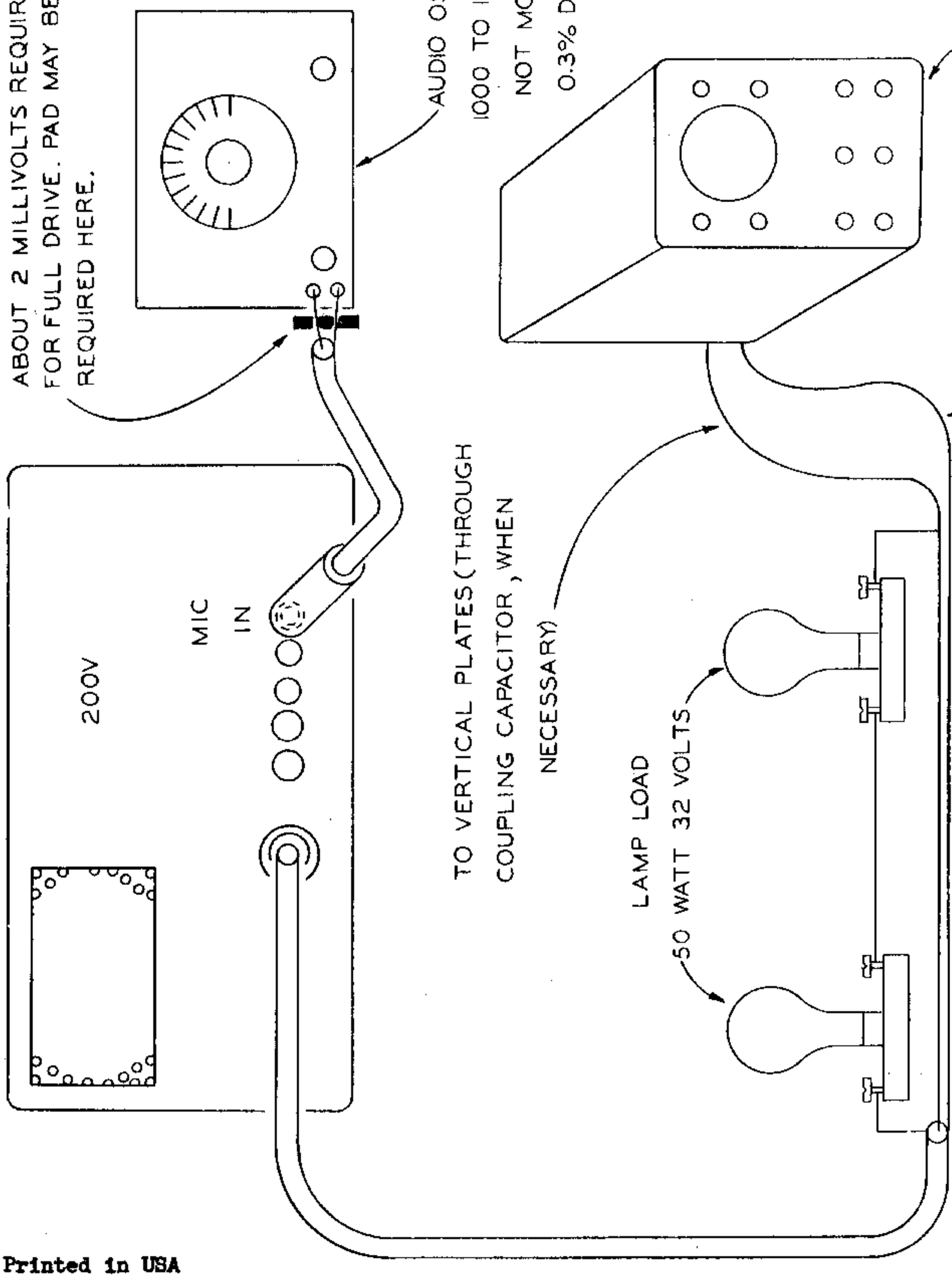

CAUTION: LAMP LOAD INACCURACIES INCREASE RAPIDLY ABOVE 80 METERS

Printed in USA

ADJUSTING THE MIXER POTENTIOMETERS

(Refer to the 200V Top View drawing)

Use a 150 watt lamp load on the 200V, with about 150 to 175 watts CW input on the 80 meter band. Remove the antenna from the receiver. Well shielded receivers may require a short piece of wire, a few inches long, to obtain sufficient signal pickup from the 200V. Try to adjust the pickup so the signal reads near full scale on the "S" meter. Keep the BFO off, the AVC on, and the RF gain on full. Adjust audio to comfortable listening level.

Tune the 200V VFO to 4000 KC. Tune the receiver to 3500 KC, to coincide with the spurious signal. Adjust the first mixer (R404) cathode rheostat for minimum "S" meter reading. Make sure control goes through a null. Now change the bandswitch and receiver to 40 meters. Now tune the 200V VFO to 6900 KC and the receiver to 7100 KC to coincide with the spurious signal. Adjust R415 and R418 for minimum "S" meter reading. Varying either of these controls will usually affect the other; so it will be necessary to keep adjusting them alternately until a minimum is obtained. Be sure that these adjustments do not reduce the power input more than 10%.

If the 200V is always operated with the power output control retarded for driving a linear amplifier, the above procedure may be repeated with the control in this position. This can result in improved spurious ratio at the lower power level required from the 200V.

Set the 200V VFO to 29.7 mc. With an antenna or a dummy load connected and the Function switch in Manual and Emission switch in CW position, turn the CW Carrier control and Power Control to minimum. Adjust Carrier Null potentiometers A and B for minimum carrier as observed on the scope. After the carrier has been completely nulled, any vertical deflection of the dot indicates excessive spurious radiation.

If this condition exists, it will be necessary to adjust the Triple Trap Coil located to the left of the OA2 tube. There are three powdered iron cores for the three coils on this form. One core is near the chassis, another near the center, and a third near the bottom of the form. Using a 1/8" hexagonal TV alignment tool (Allied Radio part #42N377, General Cement type 8606),

starting with the core nearest to the chassis, adjust each one slightly for minimum vertical deflection on the scope, or minimum spurious signal in the receiver at 30 megacycles. Now adjust R411B (second mixer grid bias) for further reduction of the spurious signal.

With the VFO remaining at 29.7 mc., tune your receiver to the spurious signal at 27.7 mc., and adjust the core nearest to the chassis slightly for minimum signal.

Note: These null points on the "S" meter will not necessarily be zero, due to varying characteristics of each manufacturer's "S" meter circuit. If you check your "S" meter with a laboratory standard signal generator, the level of the spurious signal in question can be determined, provided the receiver is clear of its own spurious pickup response.

It is recommended that these adjustments be checked whenever a mixer tube is changed.

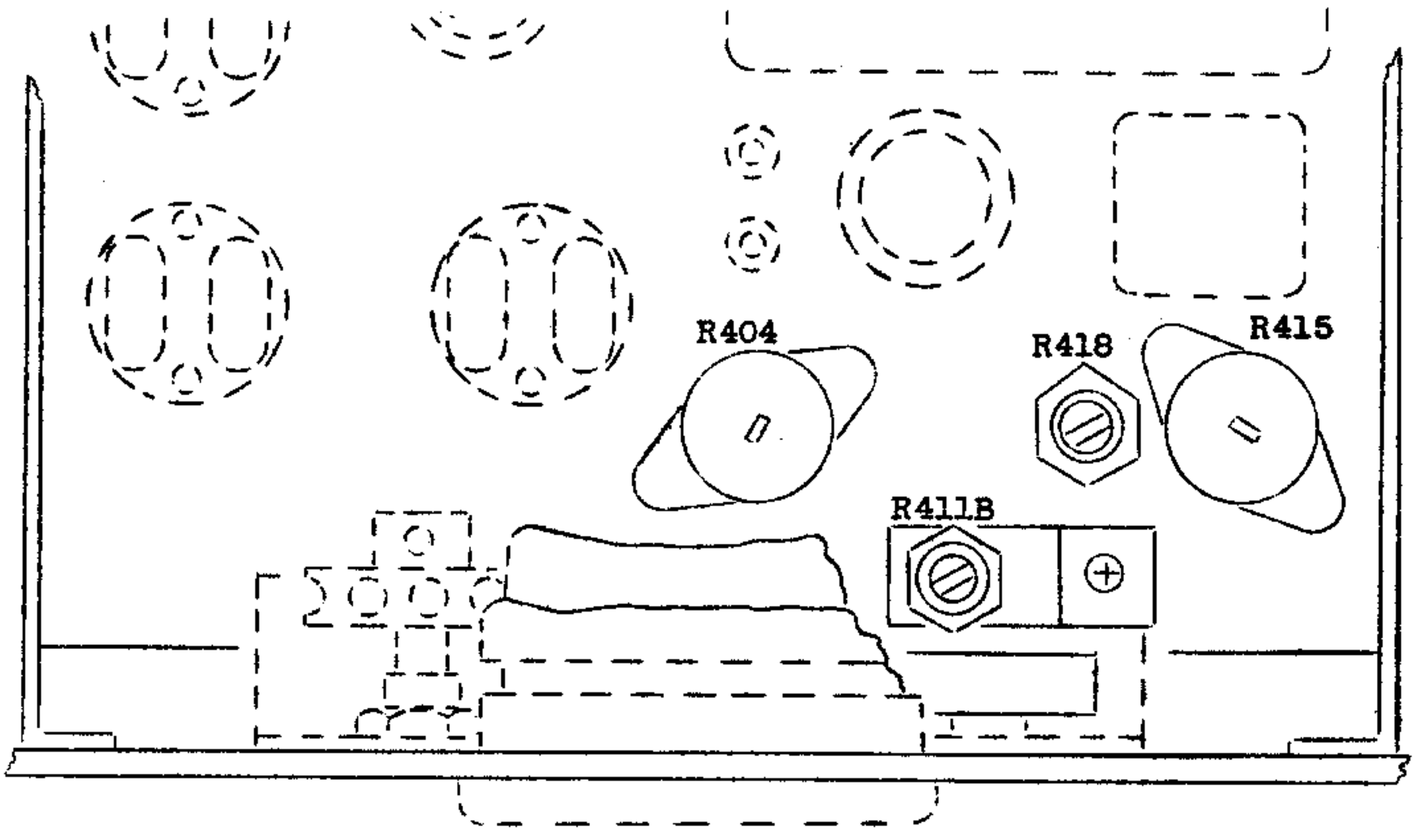

200V LIMITER BATTERY MAINTENANCE

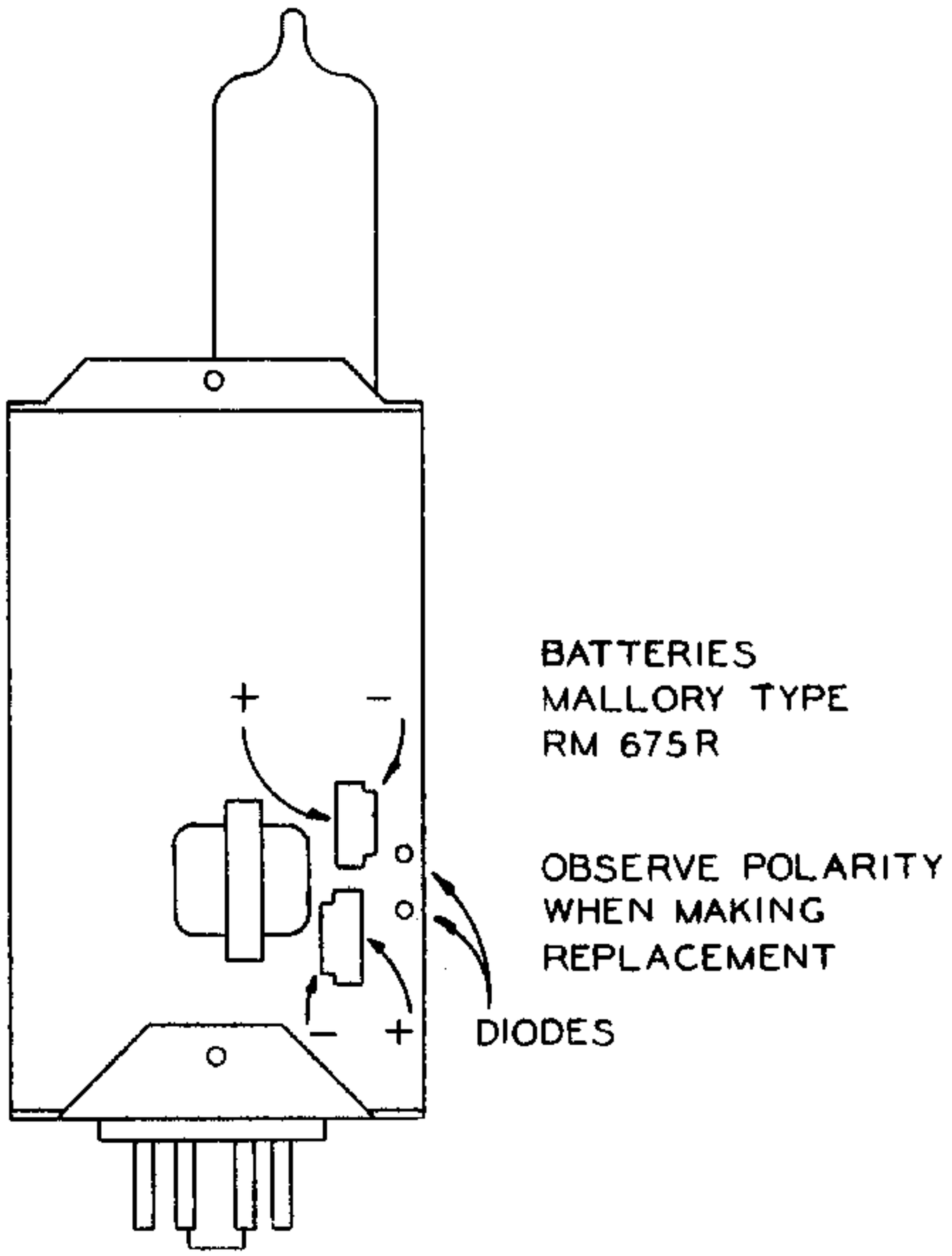

The normal life expectancy of the mercury batteries is several years, and will be equal to their "shelf life". Due to the circuit arrangement, the batteries will charge when the limiter operates. When their internal resistance becomes too high, the output of the limiter will rise appreciably and the RF stages may "flat top" with speech.

If a germanium diode develops leakage, the audio gain will be reduced considerably, since this will cause the inverse feedback to be applied at all speech levels instead of the higher levels only.

200V
3/13/61
Printed in USA

XT-10-15-20-40-80

XTAL OSCILLATOR PLATE COIL CHART

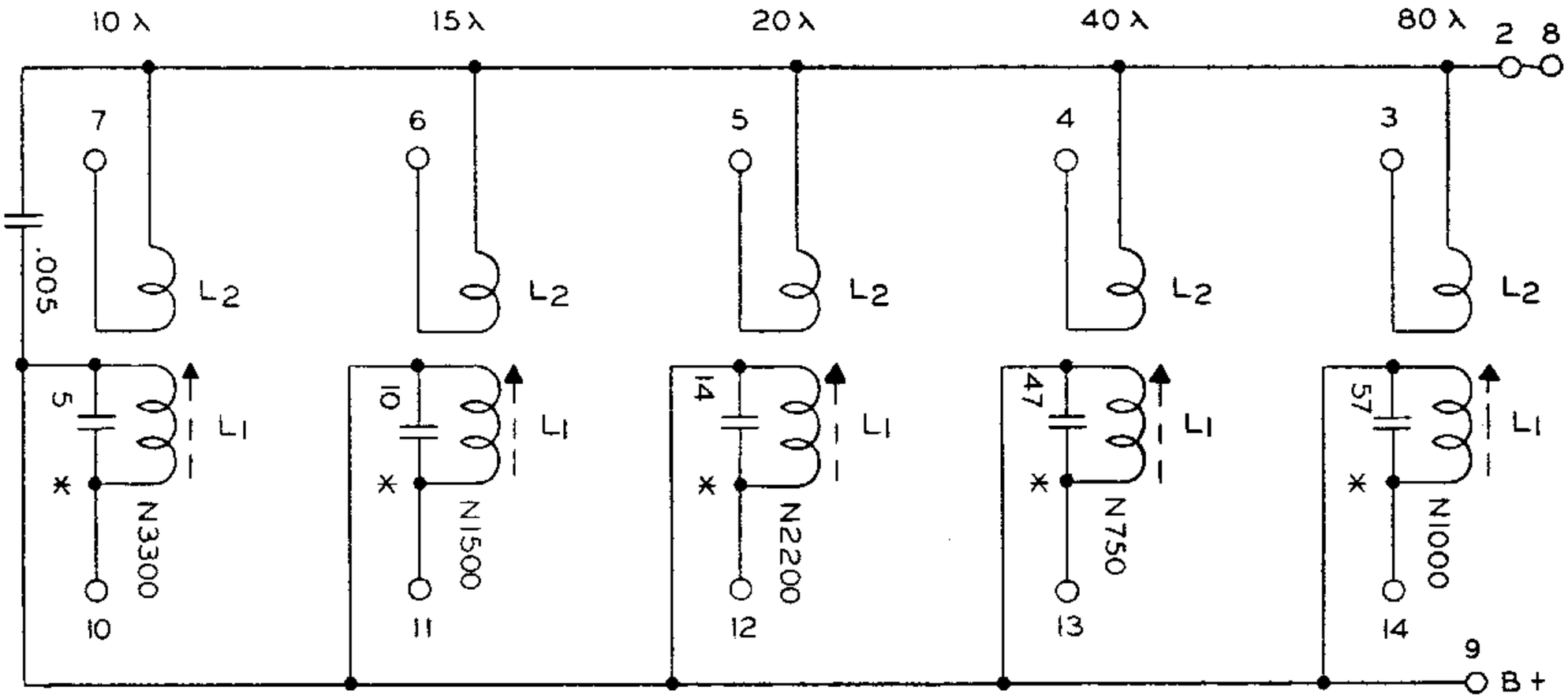

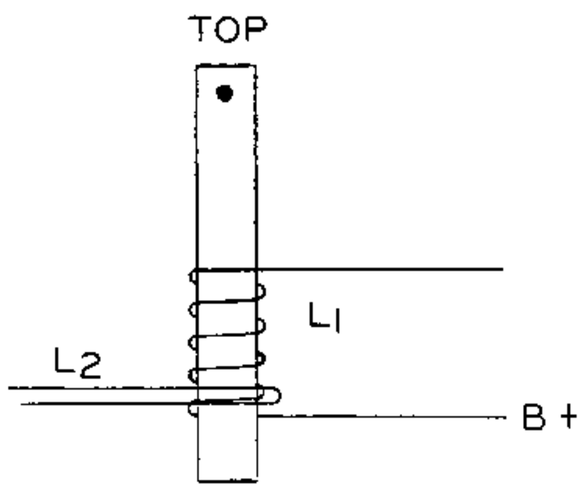

SHIELD CAN BRACKET IS CONNECTED TO TERMINAL # 2 (GROUND)

LINK END OF L_1 GOES TO B + BUSS BAR

* TC CAPACITORS AS NOTED

2M-10-15-20-40-80

2ND MIXER COIL CHART

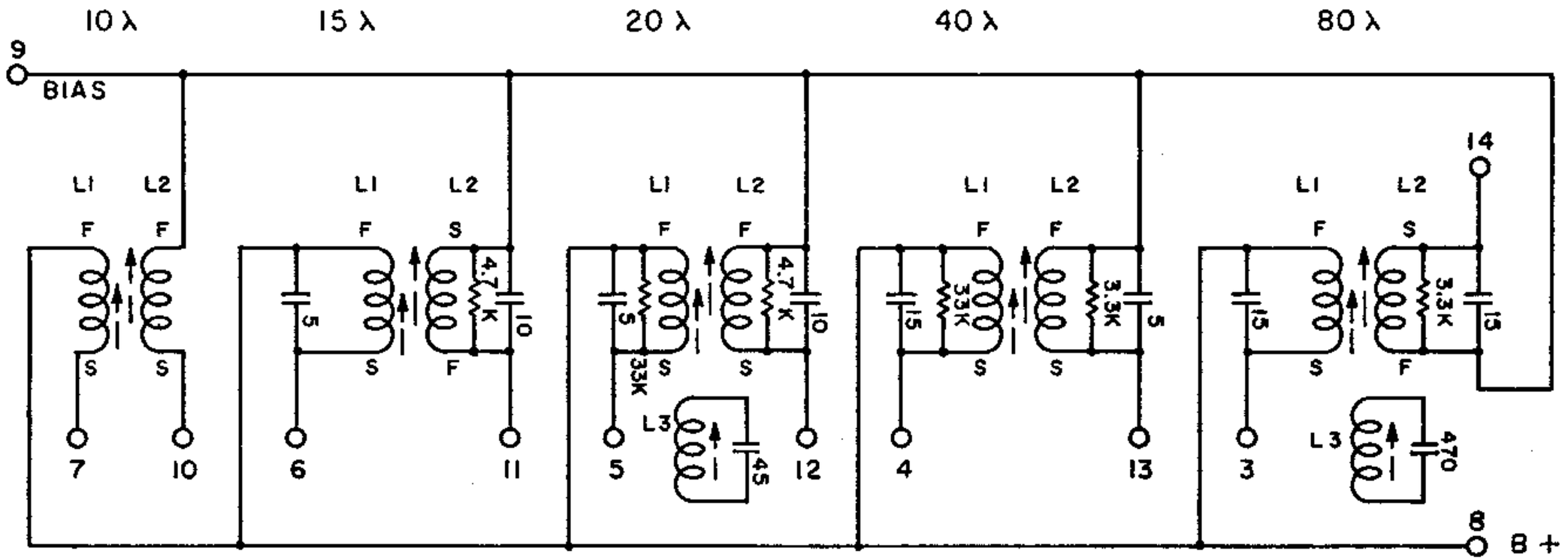

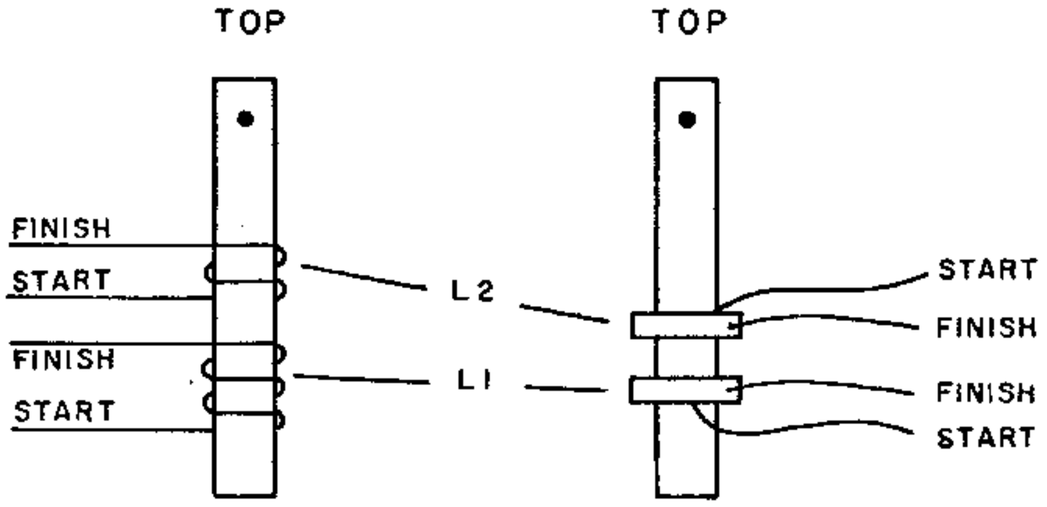

SHIELD CAN BRACKET IS CONNECTED TO TERMINAL # 2 (GROUND)

D-10-15-20-40-80

DRIVER COIL CHART

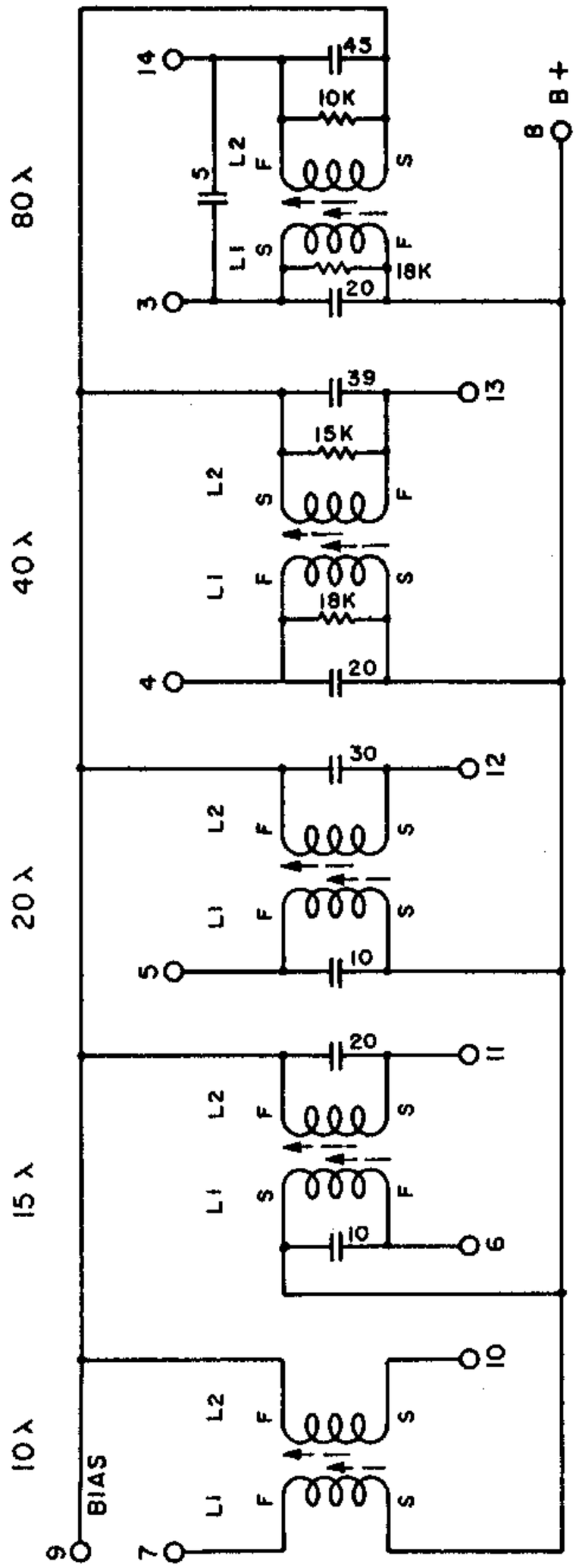

PHYSICAL CORRELATION BETWEEN THE 200V AND THE 200V WIRING DIAGRAM

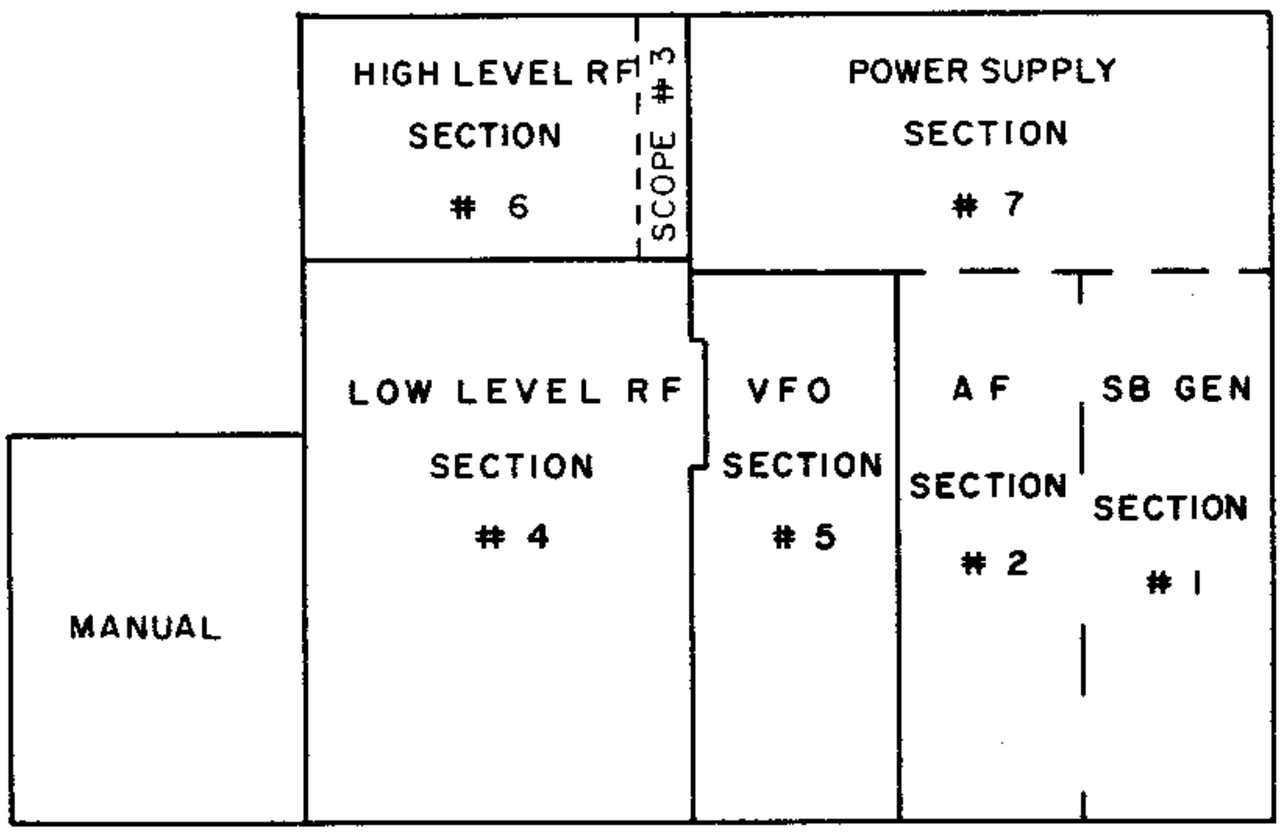

FRONT PANEL
WIRING DIAGRAM

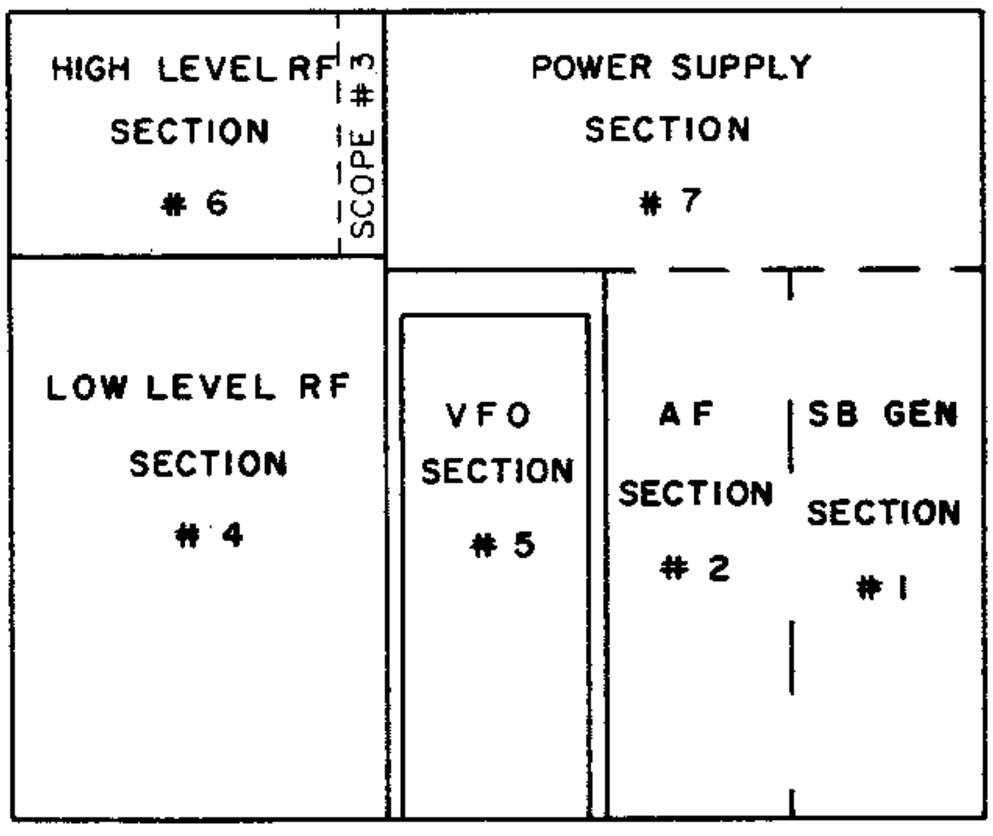

FRONT PANEL
200V BOTTOM VIEW

The wiring diagram follows the physical concept of the bottom view of the 200V, to facilitate locating the components. All resistors and capacitors on the sideband generator chassis, for example, are represented by the numerical prefix 1, such as R101 and C101, etc.

RESISTOR BOARD ON LO-LEVEL RF CHASSIS

MODEL 200V

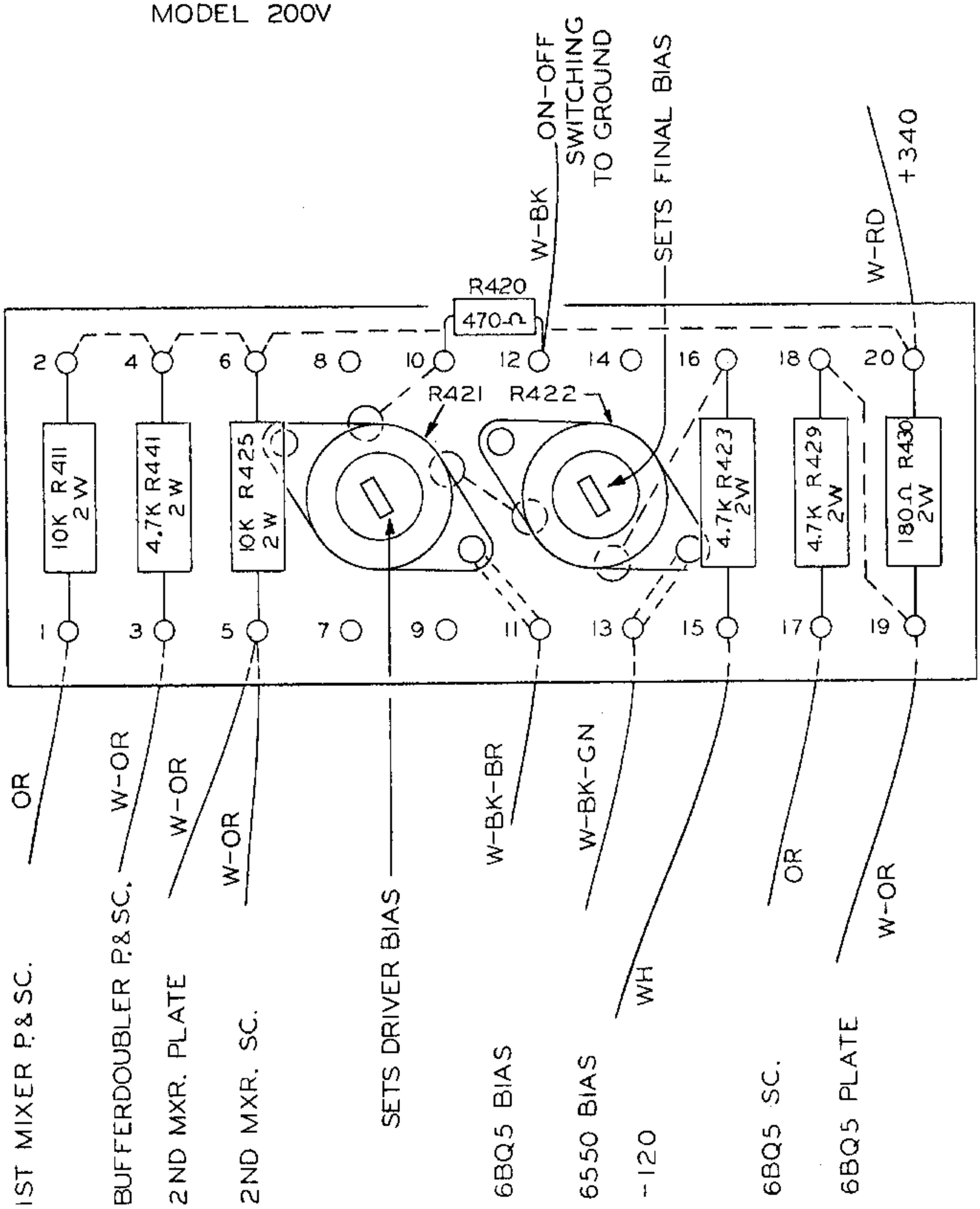

200V ACCESSORY BAG:

The following items are packed separately in a small bag which has been placed inside the shipping crate:

1. 1 - Plug, 4 prong, Cinch-Jones P304 CCT
2. 1 - Plug, 2 prong, Cinch-Jones P302 CCT
3. 1 - Socket, 2 terminal, Cinch-Jones S302 CCT
4. 1 - Plug, 3 circuit telephone type, Switchcraft #267
5. 1 - Fuse, 8 ampere, type 3AB, medium time lag Littlefuse #314008
6. 1 - Allen wrench, #10 (for large knobs)

The 4 prong plug provides access to the Internal Relay contacts. A Jumper has been installed from terminal 2 to terminal 4, which applies line voltage to the TO ANT RLY 115V AC 25 WATTS socket. For keying other apparatus, where 115V AC is not required, be sure to remove the jumper.

The 2 prong plug should be soldered to the speaker voice coil leads and the 2 terminal socket to the receiver output transformer as described in the Receiver Connection Diagram.

The 3 circuit telephone type jack provides access to the blocking bias circuit.

200V
2/24/61
Printed in USA

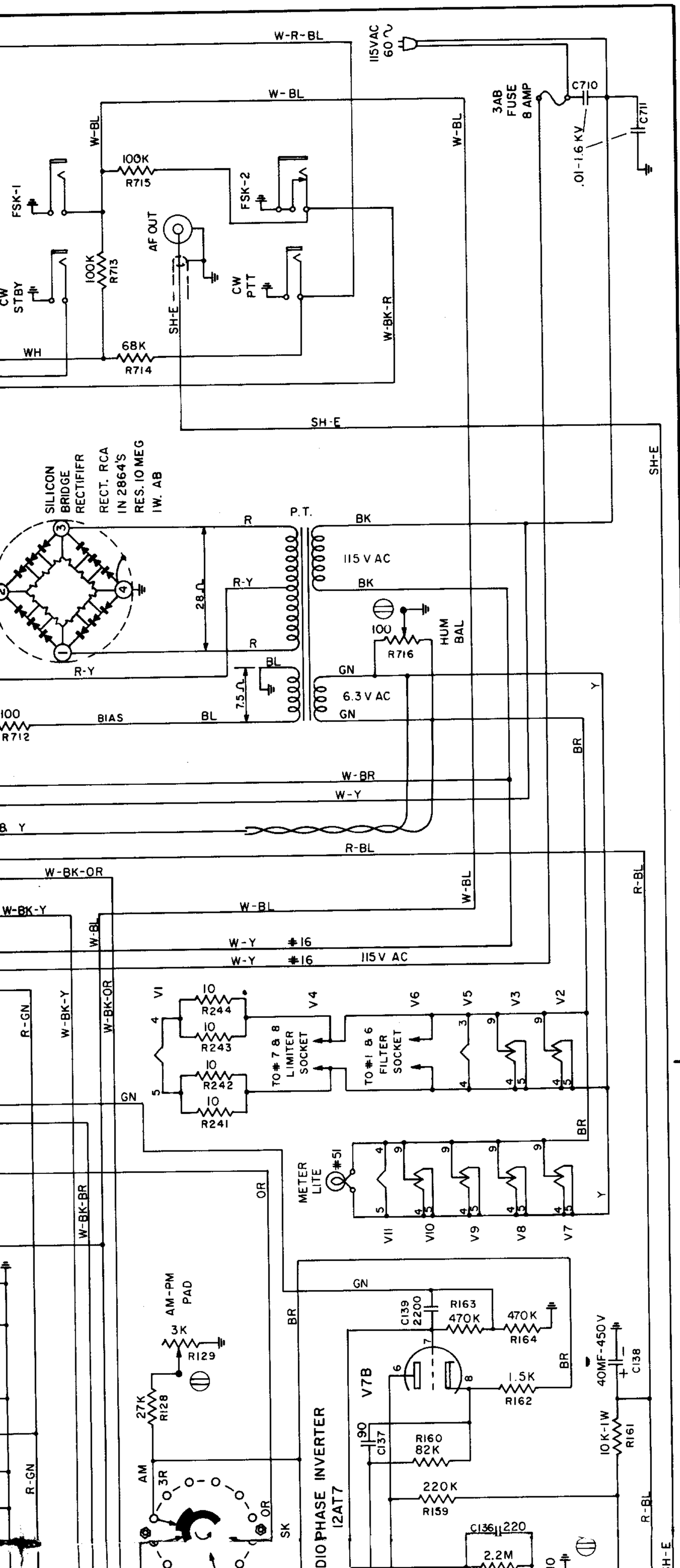

RESISTORS ARE 1/2 WATT 10 % EXCEPT AS OTHEWISE SPECIFIED.

K= TIMES 1,000. M= TIMES 1,000,000.

CAPACITOR VALUES SHOWN DECIMALLY ARE MICROFARADS, OTHER ARE MICROMICRO-FARADS, EXCEPT AS OTHERWISE SPECIFIED.

ALL SWITCHES ARE SHOWN AS SEEN FROM REAR. THE NUMBERS DENOTE WAFER POSITION. No. 1 IS NEXT TO PANEL. THE LETTERS R & F DENOTE REAR & FRONT SECTIONS OF WAFER, RESPECTIVELY. THE FRONT SECTION CONTACTS ARE SHOWN BY DASHED LINES & ARE AS VIEWED THRU THE WAFER FROM REAR. THE BLACKED ROTORS ARE ON REAR SECTION. SOME WAFERS HAVE LUGS (WITHOUT CONTACTS) WHICH ARE USED AS TIE POINTS.

THE THREE PLUG-IN COIL UNITS, 2ND MIXER, RF DRIVER & XTAL OSC PLATE SHOW THE CIRCUIT USED ON THE 40 METER BAND. REFER TO CHART (IN INSTRUCTION MANUAL) FOR OTHER BANDS. EACH OF THE ABOVE PLUG-IN COIL UNITS CONTAIN SIX COIL, WHEN AN "X" BAND COIL IS INCLUDED.

NUMBERED ARROWS AROUND THE CANGED BAND-SWITCH DESIGNATE WHERE WIRE CONNECTIONS GO TO A PLUG-IN COIL GROUP ASSOCIATED WITH THE PARTICULAR SWITCH FUNCTION.

PLUG-IN COIL SOCKET – LUG VIEW

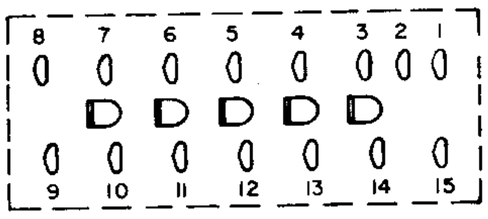

CENTER LUGS ARE TIE POINTS & HAVE NO INTERNAL CONNECTIONS

THREE SOCKETS ARE WIRED FOR XTAL OVENS # NE-62 (OVENS OPTIONAL)

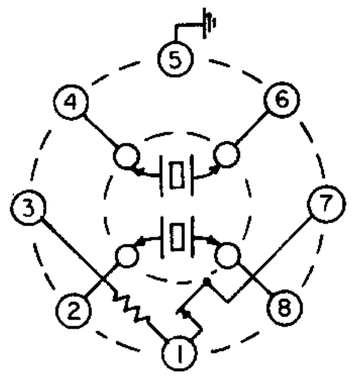

▼ = .005 CERAMIC CAPACITOR

♦ = THREE CAPACITORS IN ONE CAN

◗ = TWO " " " "

■ = TIE POINT

▮ = RESISTORS & POTS ON BOARD LUG NUMBERS ARE SHOWN

▮ = LETTERED LUG

◎ = TEST POINT

SH = SHIELDED AUDIO CABLE

S & F = START & FINISH OF WINDING

LAST R & C NUMBERS

R164 & C140 R244 & C223 R307 & C304
R461 & C482 R513 & C517 R613 & C620
R721 & C711 LIMITER = R12 & C8
FILTER = R37 & C27 PS-2 = R8 & C10

POWER SUPPLY SECTION # 7

W-R-BL
W-BK
COAX P
COAX Q
W-BK-R
TO SPKR VOICE COIL
S-302-AB
W-BK-BR
W-BK-Y
INTERNAL RELAY
S-304-AB
W-BL
W-OR
W-BR
R-BR
ANTENNA RELAY SOCKET
P-304-CCT
SH-B
MIC
PTT
USE AMPHENOL MC2M CONNECTOR
W-R-BL
47K R702
470K R703
W-R
W-BL
R
WH
W-BR
W-Y
W-BK-GN
R-GN
R +680 V
WH —100V
BLOCK BIAS
PHONES
W-BK-BL
W-BK-Y
W-BK-BR
470K R704
10 R705
C701
VFO OUT
VFO IN
NE-2
330K R711
CW MAN VOX
CW STBY
FSK-1
100K R713
68
WH
W-BK-GN
W-BK-OR
150K-2W R707
C707
40 MFD 450V W-BK-R
150K 2W AB R721
1N2864'S
68-33
CH-1
80Ω
3 RES. 10 MEG. 1W AB R718,19 & 20
100K-2W
R709
R710
C705
C706
250MF 450V
68-33
CH-2
80Ω
R-Y
8K-10W R706
R708 150K-2W
C703 40MF 450V
C702
40MF 150V
C704
5H-50MA-330Ω
CH-3
60 MA
100 R712
BIAS
R-BL
115V AC
TWISTED PAIR BR & Y
W-BK-OR
W-BK-Y
W-Y
R-GN
GN
SILICON BRIDGE RECTIFIER
RECT. RCA IN 2864'S
C88-102
R-Y
W-BK-BR
FSK DEV
OR
20K R127
IN95
DE105
C213 100
R126 470K
C124 .001
330 R125
C122
RFC-3 2.5MH
.001 C120
1.5-10 C121
8MC
22K R124
22K R123
8 MC REATANCE TUBE
6BL8 V11A
W-BK-R
METER
TWISTED PAIR R-BR & W-OR
W-BL
W-BK-BL
W-BK-GN
W-BK-Y
W-BK-BR
C222
NOT USED
R-BR
W-OR
C221 .02-600V
N TRANSMIT OSITION ENERGIZED)
AF AMPLIFIER 6BL8-V6A
68K R37
1.2K R36
220K R35
C27 .005
.001 C26
1M R34
R16 47K
R15
R14 47K
R12
C18 .005
C16 .005
C15 .005
C13 500
C12 .005
C10 .005
C9 500
68K R33
220K R32
.02
.25
AF AMPLIFIER V6B
W-R-BL
W-Y
W-R
W-BK-Y
W-BK-GN
R-GN
SH-B
W-R-BL
W-BK-GN
W-Y
W-Y
W-R
115V AC
Y & W-BK-BR
TWISTED PAIR R-BR & W-OR
W-BK-R
METER
GN
W-BK-BR
W-BK-BR
W-BK-OR
W-BK-Y
W-BL
R-GN
W-BK-OR
W-BK-Y
W-Y
W-Y
R-GN
W-BK-Y
W-BK-OR
W-BK-BR
GN

EL RECTION # 6
52 Ω OUTPUT
RFC-2 .022 MH
FAN MOTOR
C616
.01-1.6 KV
C615
.01-1.6KV
C614
30K-50W
R613
.01-1.6KV
C613
3K-20W
R612
NEUTRALIZING
W-BK
RCVR OUTPUT TRANS. & AUXILLIARY SOCKET
S-302-CCT
COAX P
COAX Q
W-BK-R
RCVR OUTPUT
P-302-RP
W-BK-BR
10-2W
R701
SPKR VOICE COIL & AUXILLIARY PLUG
P302-CCT
TO SPKR VOICE COIL
TO ANT. RLY. 115VAC-25W
INTERNAL RELAY
S-304-AB
R-BR
JUMPER ON PLUG CONNECTS 115V AC TO ANTENNA RELAY SOCKET
P-304-CCT
W-BR
W-Y
R-GN
W-R
R
W-BK-SL
METER ADJUST WATTS INPUT
22
R610
100
R611
51
R609
SL
+340 V
WH
100K-2W
R460
39 K
R461
R-BL
BL
C471
500
100K
R459
C470
620
R458
1M
R457
.1
C469
SCOPE WIDTH
100
R456
DE402 OMC 522
C468
T414
2.2K
C467
20
HORI. AMP 6BL8-V21B
8 MC AMP 6BL8-V21A
C466
.001
1.8K
R454
R453
.001
C465
C464
COAX-A
R452
2.2K
R443
100K
R446
C452
W-BK-Y
W-BK-GN
BK
TO JONES SOCKET
V15
V16
V12
C619
C620
C617
C618
BR
Y
TWISTED PAIR BR & Y 6.3 V AC
COAXQ
EXTENSION SOCKET
COAX R
C517
75
PLUG-IN MODULE
TN-6
TN-5
TN-4
R24
330K
.005
C18
.01
C17
R23
R22
C16
R21
20
47K
500
C15
.001
C14
R19
R18
C13
R17
C27
R35
220K
C26
AF AMPLIFIER 6BL8-V6A
R16
470K
C12
C11
R15
R14
C10
R13
R12
C9
R11
C8
C7
V6B

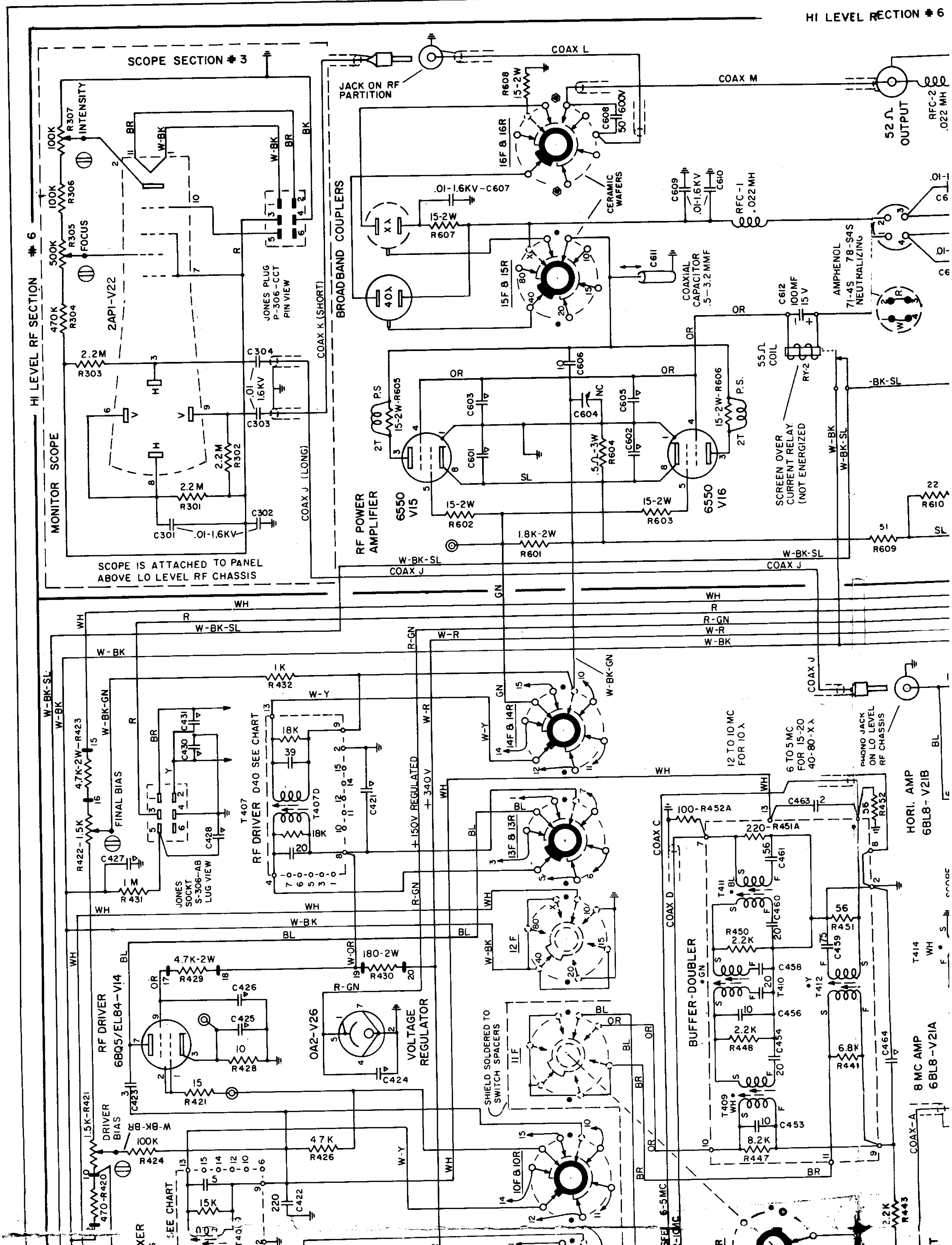
HI LEVEL RECTION # 6
HI LEVEL RF SECTION # 6
SCOPE SECTION # 3
MONITOR SCOPE
2API-V22
100K R307 INTENSITY
100K R306
500K R305 FOCUS
470K R304
2.2M R303
2.2M R302
2.2M R301
C301 .01-1.6KV C302
C304 .01 1.6KV C303
JONES PLUG P-306-CCT PIN VIEW
SCOPE IS ATTACHED TO PANEL ABOVE LO LEVEL RF CHASSIS
COAX K (SHORT)
COAX J (LONG)
BROADBAND COUPLERS
JACK ON RF PARTITION
COAX L
COAX M
R608 15-2W
16F & 16R
C608 50 600V
CERAMIC WAFERS
.01-1.6KV-C607
15-2W R607
15F & 15R
C611
COAXIAL CAPACITOR .5-3.2 MMF
C609 .01-1.6KV C610
RFC-1 .022 MH
52 Ω OUTPUT
RFC-2 .022 MH
AMPHENOL 78-S4S
71-4S NEUTRALIZING
C612 100MF 15V
55Ω COIL
RY-2
SCREEN OVER CURRENT RELAY (NOT ENERGIZED)
C606
C603
C604 NC
C605
C601
C602
.5Ω-3W R604
15-2W-R605 P.S 2T
15-2W-R606 P.S. 2T
RF POWER AMPLIFIER
6550 V15
6550 V16
15-2W R602
15-2W R603
1.8K-2W R601
22 R610
51 R609
W-BK-SL
COAX J
WH R R-GN W-R W-BK
W-BK-GN
1K R432
W-Y
T407 RF DRIVER D40 SEE CHART
18K 39 T407D 18K 20 C421
+150V REGULATED
+340V
14F & 14R
13F & 13R
12F
11F
10F & 10R
12 TO 10 MC FOR 10 λ
6 TO 5 MC FOR 15-20 40-80-X λ
PHONO JACK ON LO LEVEL RF CHASSIS
HORI. AMP 6BL8-V21B
4.7K-2W-R423
FINAL BIAS
R422-1.5K
C427
1 M R431
C431 C430 C428
JONES SOCKT S-306-AB LUG VIEW
RF DRIVER 6BQ5/EL84-V14
4.7K-2W R429
180-2W R430
C426 C425
10 R428
15 R421
C423
OA2-V26
VOLTAGE REGULATOR
C424
1.5K-R421
DRIVER BIAS
W-BK-BR
100K R424
470-R420
47K R426
5 15K 220 C422
SEE CHART
SHIELD SOLDERED TO SWITCH SPACERS
COAX C
COAX D
BUFFER-DOUBLER
100-R452A
220-R451A
C463 2
56 R452
56 C461
T411 C460
R450 2.2K
C458 T410
C456
2.2K R448
C454
T409 C453
8.2K R447
56 R451
75 C459
T412
6.8K R441
C464
T414
8 MC AMP 6BL8-V21A
COAX-A
2.2K R443
6-5MC

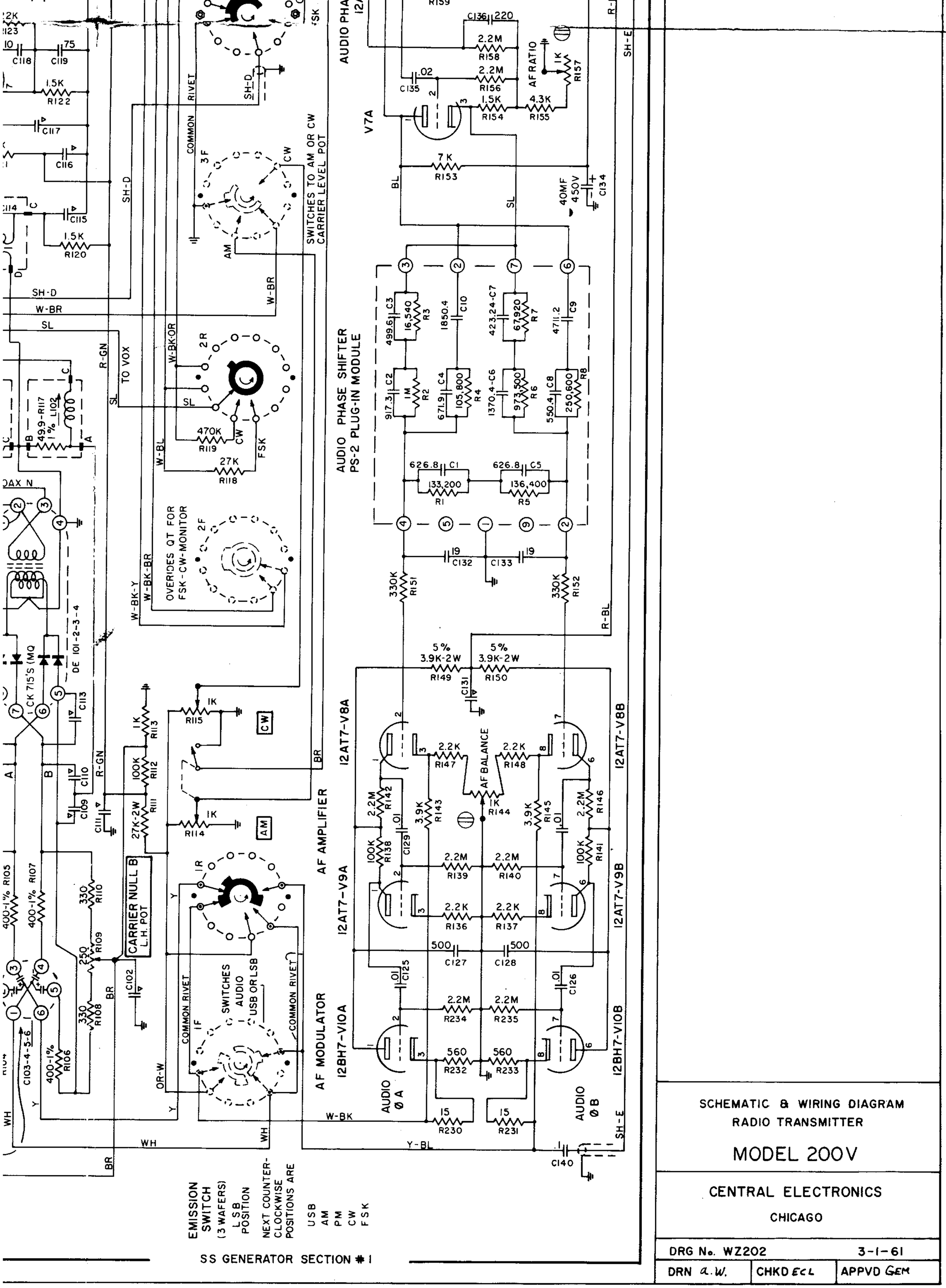

SCHEMATIC & WIRING DIAGRAM
RADIO TRANSMITTER

MODEL 200V

CENTRAL ELECTRONICS
CHICAGO

DRG No. WZ202 3-1-61

DRN a.w. | CHKD EcL | APPVD GEM

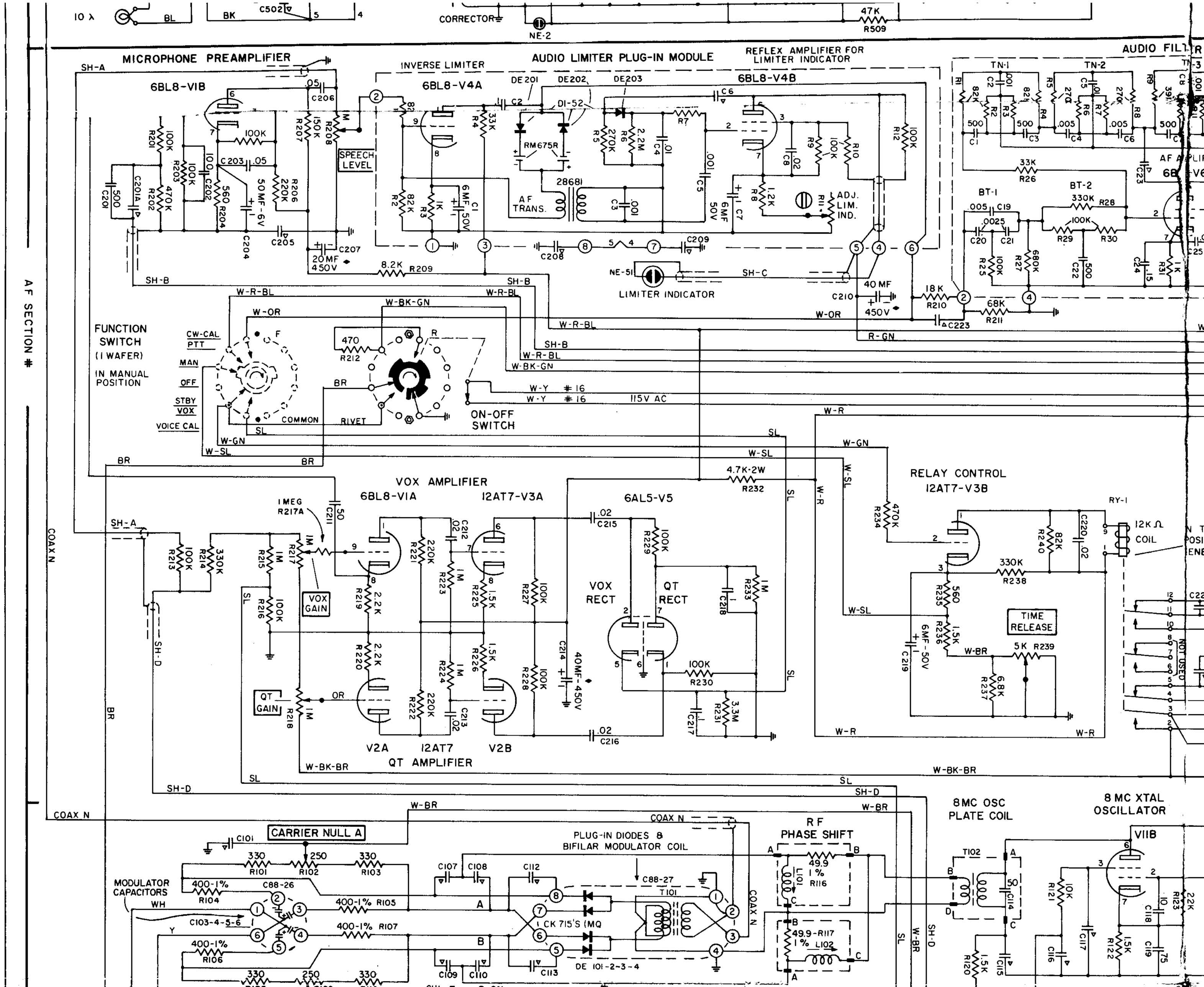

MICROPHONE PREAMPLIFIER
6BL8-V1B
INVERSE LIMITER
6BL8-V4A
AUDIO LIMITER PLUG-IN MODULE
REFLEX AMPLIFIER FOR LIMITER INDICATOR
6BL8-V4B
AUDIO FILTER
SPEECH LEVEL
AF TRANS.
ADJ. LIM. IND.
LIMITER INDICATOR
FUNCTION SWITCH (1 WAFER) IN MANUAL POSITION
CW-CAL
PTT
MAN
OFF
STBY
VOX
VOICE CAL
COMMON
RIVET
ON-OFF SWITCH
115V AC
VOX AMPLIFIER
6BL8-V1A
12AT7-V3A
6AL5-V5
VOX RECT
QT RECT
VOX GAIN
QT GAIN
V2A
12AT7
V2B
QT AMPLIFIER
RELAY CONTROL
12AT7-V3B
TIME RELEASE
12K Ω COIL
NOT USED
CARRIER NULL A
MODULATOR CAPACITORS
PLUG-IN DIODES & BIFILAR MODULATOR COIL
CK 715'S (MQ
DE 101-2-3-4
RF PHASE SHIFT
8MC OSC PLATE COIL
8 MC XTAL OSCILLATOR
V11B
COAX N

AF SECTION #

XTAL SOCKETS

CW-FSK MONITOR

20.5MC 40λ

T408-D

XT 40 SEE CHART

VFO INPUT

SOCKET #1

SOCKET #2

SOCKET #3

8 MC INPUT

VFO INPUT

TWISTED PAIRS BR & Y

PLUG #1

PLUG #2

PLUG #3

CABLE

COAX N

COAX P

TWISTED PAIR BR & Y 6.3V AC

VFO SECTION #5

MC DIAL #51

15λ TO Xλ DIAL #51

10λ

FILAMENTS

VFO 6BL8 V17A V17B

VFO AMPLIFIER 6CB6-V18

VFO OUTPUT 5-6 MC

TUNING

CORRECTOR

NE-2

MICROPHONE PREAMPLIFIER 6BL8-V1B

INVERSE LIMITER 6BL8-V4A

AUDIO LIMITER PLUG-IN MODULE

REFLEX AMPLIFIER FOR LIMITER INDICATOR 6BL8-V4B

AUDIO FILTER

TN-1

TN-2

TN-3

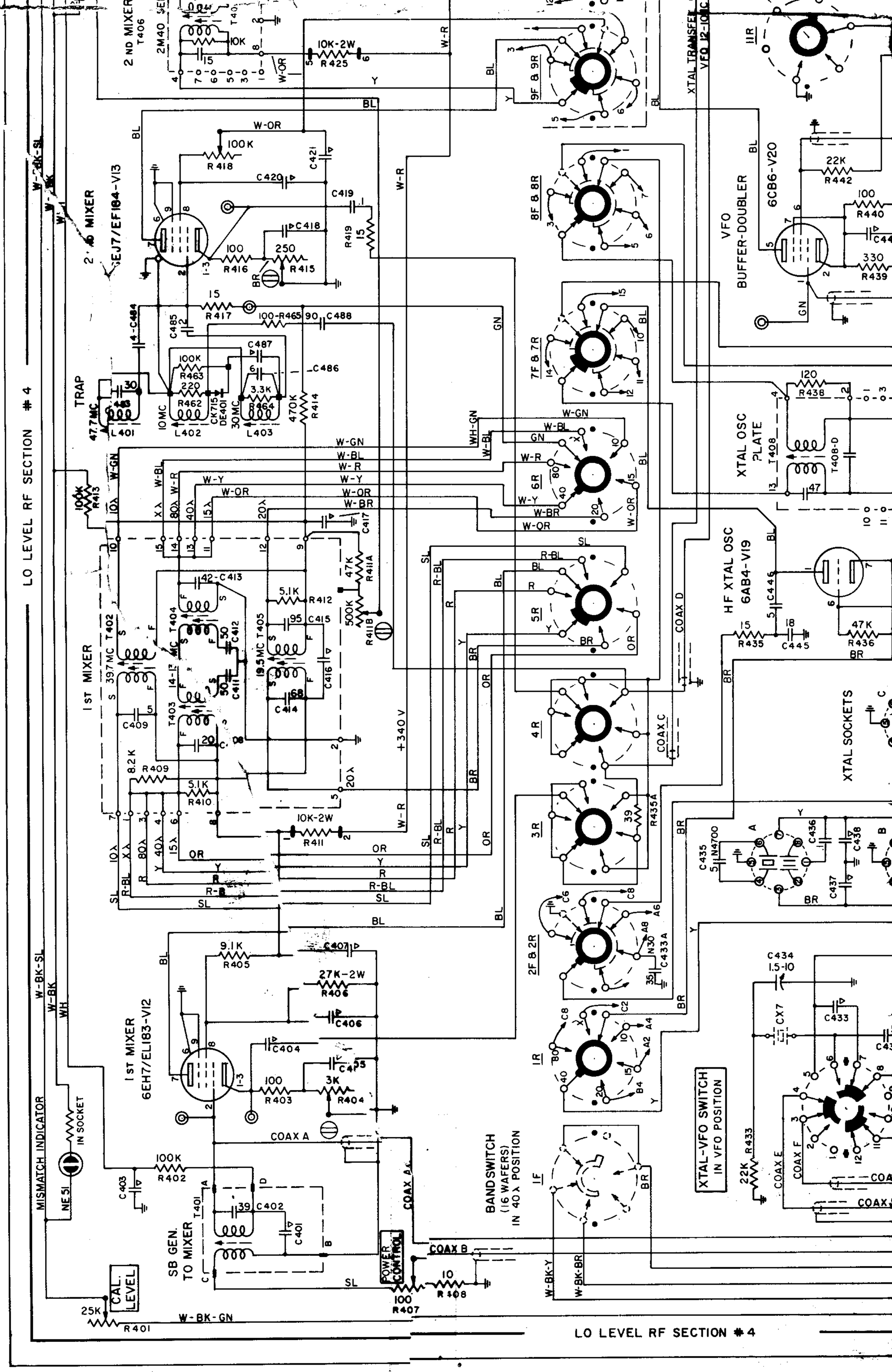
LO LEVEL RF SECTION #4
2 ND MIXER
T406
2M40
10K
15
10K-2W
R425
W-OR
W-R
BL
Y
9F & 9R
XTAL TRANSFER
VFO 12-10MC
11R
2 ND MIXER
GEJ7/EF184-V13
100K
R418
C421
C420
C419
C418
R419
15
100
R416
250
R415
BR
W-OR
W-BK-SL
W-BK
WH
TRAP
47.7MC
L401
L402
L403
10MC
30MC
CK715
DE401
R463
R462
R464
R414
470K
C485
C484
R417
100-R465
90
C488
C487
C486
100K
220
3.3K
R413
100K
W-GN
W-BL
W-R
W-Y
W-OR
W-BR
W-BK
WH-GN
W-BL
GN
6R
5R
4R
3R
2F & 2R
1R
1F
8F & 8R
7F & 7R
VFO
BUFFER-DOUBLER
6CB6-V20
22K
R442
100
R440
330
R439
GN
XTAL OSC
PLATE
T408
T408-D
120
R438
47
HF XTAL OSC
6AB4-V19
C446
15
R435
18
C445
47K
R436
BR
XTAL SOCKETS
C435
N4700
C436
C438
C437
C434
1.5-10
CX7
C433
XTAL-VFO SWITCH
IN VFO POSITION
R433
22K
COAX E
COAX F
COAX D
COAX C
COAX A
COAX B
COAX A
COAX B
COAX C
COAX D
COAX E
COAX F
1 ST MIXER
39.7MC
T402
T404
T403
14-13MC
19.5MC
T405
C409
C412
C411
C414
C416
C415
C417
42-C413
5.1K
R412
95
47K
R411A
500K
R411B
+340 V
8.2K
R409
5.1K
R410
10K-2W
R411
OR
Y
R
R-BL
SL
BL
9.1K
R405
C407
27K-2W
R406
C406
C404
C405
100
R403
3K
R404
1 ST MIXER
6EH7/EL183-V12
100K
R402
C403
T401
39
C402
C401
SB GEN.
TO MIXER
POWER
CONTROL
100
R407
10
R408
BANDSWITCH
(16 WAFERS)
IN 40λ POSITION
W-BK-Y
W-BK-BR
MISMATCH INDICATOR
NE51
IN SOCKET
CAL.
LEVEL
25K
R401
W-BK-GN
LO LEVEL RF SECTION #4