GONSET

INSTRUCTION MANUAL

GONSET SIDEWINDER
MODEL 910A

POWER SUPPLY
MODEL 911A — AC
MODEL 912A — DC

GONSET,® INC.
A SUBSIDIARY OF ALTEC LANSING CORPORATION
1515 S. MANCHESTER AVE., ANAHEIM, CALIF.

©GONSET, INC., LITHO IN USA 12/64

520-793

INTRODUCTION

The Gonset model 910A Sidewinder is designed for SSB, AM, and CW tronsceiver operotion on the 6 meter band. In the transceive mode, the Sidewinder feotures "Offset Tuning" -- the receiver may be tuned one ond one-holf kilocycles in either direction without disturbing the frequency of the transmitted signol. The exciter/transmitter, with on input of 20 watts PEP, can be either VFO or crystal controlled and is designed os an ideol campanion piece to the Gonset 913A RF power amplifier. The Sidewinder employs solid-state circuitry in all but the transmit mixer, driver and final amplifier, and utilizes common oscillators, IF circuits, crystal lattice filter, ond bolanced modulator to reduce size and increase reliability.

The receiver has a sensitivity of 1/2 microvolt for 10 db $\frac{S+N}{N}$, ond image rejection of -50 db. A crystol controlled injection oscillator, double conversion in oll modes ond a crystol lottice filter ensure a highly selective receiver with excellent stability. Completely solid-state, the receiver is designed with separote detectors for AM service ond SSB-CW service with the audio power derived from a class B omplifier delivering 2.5 watts to the speoker.

The transmitter may be either VFO or crystol controlled with sockets provided for four crystals -- one on the front panel for quick crystol chonges and the other three inside of the Sidewinder. One of the four crystols may be trimmed closely to "net" or other critical frequencies. The bosic carrier oscillator is crystal controlled and, in the SSB mode, feeds o balanced modulotor to provide the carrier suppression required for SSB service. Filoment power to the transmit tubes moy be switched off by a front panel control -- thereby eliminating almost oll of the power droin when the Sidewinder is operoting in the receive mode. The high frequency oscillotor, used in both tronsmit and receive, is crystal controlled by one of four crystals selected by the front ponel Sector control; each crystol ollowing coverage of a one-megacycle segment of the 6 meter band.

Two power supplies hove been designed for the Sidewinder; the model 911A for operation from a 120 vac source and the model 912A for operation for a 12 vdc source. The 901A and 902A power supplies are electricolly **compatible, also.** Both power supplies -- oll solid state -- use silicon rectifiers for reduced heat dissipation and higher efficiency ond contoin the speokers and the high voltage reloy. The model 911A, the oc power supply, hos on oc receptacle on the rear which is controlled by the T/R reloy to provide 120 vac to an external ontenna relay when using on RF power amplifier.

TABLE OF CONTENTS

INTRODUCTION 2
CONTROLS AND FUNCTIONS 3
SPECIFICATIONS 4
MOBILE AND FIXED STATION INSTALLATION 5
POWER CONNECTIONS 6
MOBILE NOISE SUPPRESSION 6
ANTENNAS 7
RECEIVE OPERATION 7
TRANSMIT OPERATION 7, 8, 9
THEORY OF OPERATION, RECEIVE 9, 10
THEORY OF OPERATION, TRANSMIT 10
ALIGNMENT INSTRUCTIONS, Introduction and VFO Trocking 10
ALIGNMENT INSTRUCTIONS, 9 and 15 MC IF Alignment 11
DIAGRAM OF THE MAIN PRINTED CIRCUIT CARD 12
ALIGNMENT INSTRUCTIONS, HF Crystol Oscillotor Adjustment 13
ALIGNMENT INSTRUCTIONS, Front End and First Receive Mixer Alignment 13
ALIGNMENT INSTRUCTIONS, Bolonced Modulator Adjustment 13
ALIGNMENT INSTRUCTIONS, 9 MC Oscillator Adjustment 14
ALIGNMENT INSTRUCTIONS, Transmit Driver Interstage Alignment 14
ALIGNMENT INSTRUCTIONS, Tronsmit Mixer Grid Alignment 14
ALIGNMENT INSTRUCTIONS, Transmit Center Frequency Adjust 14
ALIGNMENT INSTRUCTIONS, "S" Meter Sensitivity and Performonce Test 14
SCHEMATIC, MODEL 910A SIDEWINDER 15, 16
PARTS LIST, MODEL 910A SIDEWINDER 17, 18
SCHEMATIC AND PARTS LIST, MODEL 911A Power Supply 19
SCHEMATIC AND PARTS LIST, MODEL 912A Power Supply 20
WARRANTY POLICY 21

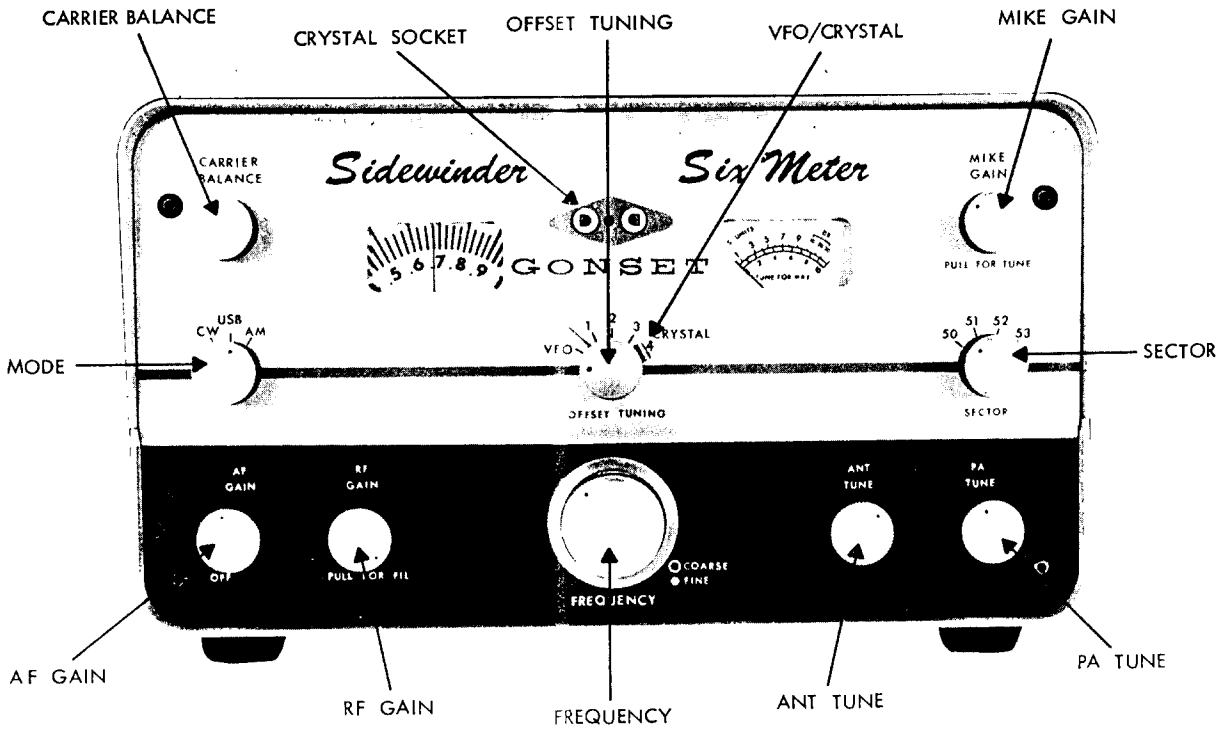

Figure 1

CONTROLS AND FUNCTIONS

Carrier Balance — The "Carrier Balance" knab controls the null of the balanced modulator during sideband transmission. Also, it controls the carrier level during AM transmission.

Mode — The "Mode" selector control is used to select the mode of operation for both transmit and receive.

Offset Tuning — The "Offset Tuning" control will tune the receiver ±1-1/2kc from the transmit frequency.

VFO/Crystal — The "VFO/Crystal" switch (the lever behind the "Offset Tuning" control) determines if the transmitter will be VFO or crystal controlled: if crystal controlled, the numbers on the crystal side of the switch indicate which crystal has been selected.

Mike Gain — The "Mike Gain" knob is a dual function control. Rotating the knob clockwise increases the microphone input to the transmitter; pulling out the knob overrides the T/R relay control in the microphone switch and holds the T/R relays in transmit. This function is used principally during the transmitter 'tune-up' procedure.

Sectar — The frequency "Sector" switch selects the one megacycle segment of the six meter band in which the unit will operate.

AF Gain — The "AF Gain" knab is a dual function control. Initial rotation turns the unit ON and further rotation increases the AF gain.

NOTE: The pilot lamp will turn on with the unit only if the filament switch is on. See RF Gain.

RF Gain — The "RF Gain" knob is a dual function control. Pulling the knob out switches power to the dial lamps and the filaments of the transmitter final stages. Pushing this knob in turns off the filaments and the dial lamps, thereby conserving power. Rotating the knob clockwise increases the RF gain.

Frequency — The "Frequency" tuning control determines the exact frequency of operation within the selected one megacycle sector. This control is not used for the transmitter when the Crystal-VFO switch is in one of the crystal positions.

Ant Tune — The "Ant Tune" control knob is used only during transmit and tunes the antenna link for the most effective impedance match between the transmitter tank and the antenna.

PA Tune — The "PA Tune" control knob is used only during transmit and tunes the transmitter final amplifier.

Crystal Socket — The crystal socket on the front panel is selected by position 1 on the "VFO/Crystal" switch.

PERFORMANCE SPECIFICATIONS

TRANSMITTER

Frequency Range:	49.975 to 54.025 mc
Emmission:	AM, SSB, and CW
Frequency Control:	Crystal HF oscillator, stobilized LF VFO
Nominal Frequency Stability: (after 15 minute warm-up.)	50 cycles per 15 minute period. (With transmit filaments on causing chassis heat rise.)
Final Amplifier:	6360 tube, class AB_1, link coupled
Power Input to Final Amplifier:	SSB: 20 watts PEP AM: 6 watts CW: 20 watts
Spurious Suppression:	-40 db
Unwanted Sideband Suppression:	-40 db
Carrier Suppression:	-50 db
Audia Response:	300 to 3450 cycles
Output Impedance:	50 ohms

RECEIVER

Frequency Range:	49.975 to 54.025 mc
Types of Reception:	AM, SSB, and CW
Nominal Frequency Stability: (ofter 15 minute warm-up.)	50 cycles per 15 minute period. (With transmit filoments on cousing chossis heat rise.)
Sensitivity:	0.5 microvolt for 10 db $\frac{S+N}{N}$
Selectivity:	3 kcs
IF Frequencies:	First IF: 14.5 to 15.5 mc Sec. IF: 9 mc
Image Rejection:	-50 db
Audio Output:	2.5 watts into a 3.2 ohm load
Antenna Input Impedance:	50 ohms, unbalanced

TRANSCEIVER

Dimensions:	9 1/2" W x 5 1/2" H x 9" D
Weight:	11 pounds
Power Consumption:	DC: 12.6 volts @ 8.0 omperes AC: 100 watts @ 117 or 120 vac

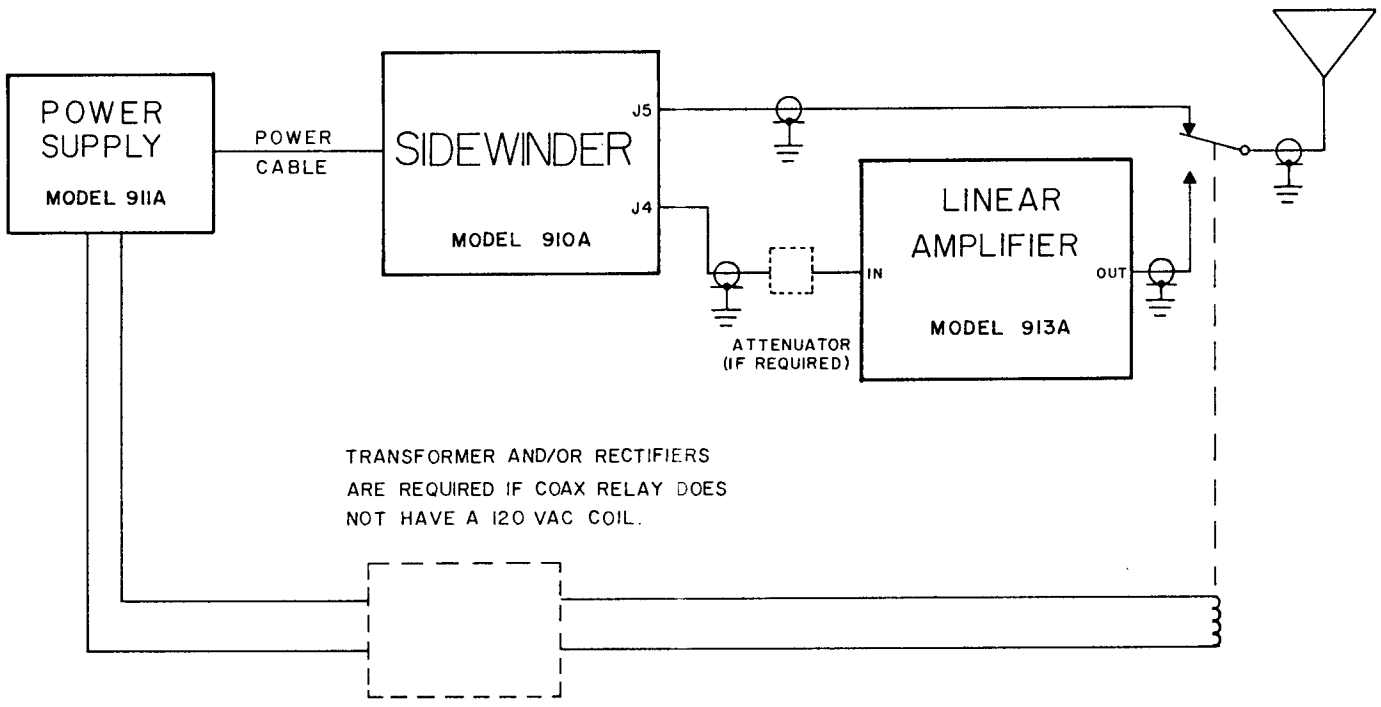

Figure 2

INSTALLATION

Fixed Stotion:

Instollotion of the Sidewinder in ony locotion is extremely simple since only three things ore necessory: power coble, microphone ond antenno. Picking o locotion is not criticol os the heat-rise of the Sidewinder is very low due to the transistor circuitry used. To ollow proper oir flow post the tronsmitter tubes, the Sidewinder should olwoys be operoted right side up, ond the ventilotion holes should not be blocked.

The ontenno connection, J4, is locoted at the reor of the unit. The ontenno circuit is designed for o 50/75 ohm cooxiol coble. For fixed stotion operotion where the ontenno cable is over 25 feet long, it is recommended thot o good quolity RG-8/U be used insteod of RG-58/U or RG-59/U since power losses are oppreciobly lower when lorger diometer cobles ore used. In mobile instollotions the smoller diometer RG-58/U is sotisfactory ond more procticol to instoll.

The Sidewinder is designed to operote with o press-to-tolk microphone in which the press-to-tolk switch 'mutes' the microphone in the releosed position, and actuotes the reloy circuit in the 'depressed' position. Most commonly used microphones hove this feoture, however, if o microphone without this feoture is used, it moy be necessory to turn down the Mike Goin control when receiving to prevent AF feedbock.

The AC power supply designed for the Sidewinder hos T/R controlled contocts on the reor of the power supply in the form of on AC receptocle. The AC receptocle supplies 117 voc for use with on externol cooxiol reloy. Figure 3 illustrotes the use of the Sidewinder ond the Gonset 913A six-meter lineor omplifier.

Mobile Instollotion:

Before moking ony instollotion, check the voltoge regulotor of the vehicle for correct operation. Use on accurate voltmeter ond suitable scole to ollow reodings of 0.1 volt in the 12 to 15 volt region. Connect the meter to the bottery terminols ond stort the engine. Note the voltoge with the engine operating below generotor pull-in speed. If voltage is less thon 12 volts, check bottery connections and, if necessory, rechorge or reploce the bottery.

Speed up the engine until the generotor is operoting ot full output -- bottery terminol voltoge should not exceed 14.5 volts. With the engine idling, turn on the lights for o few minutes, then speed up the engine to full generotor output. Voltage at bottery terminol should remoin between 14 ond 14.5 volts. If not, hove the regulotor odjusted or reploced.

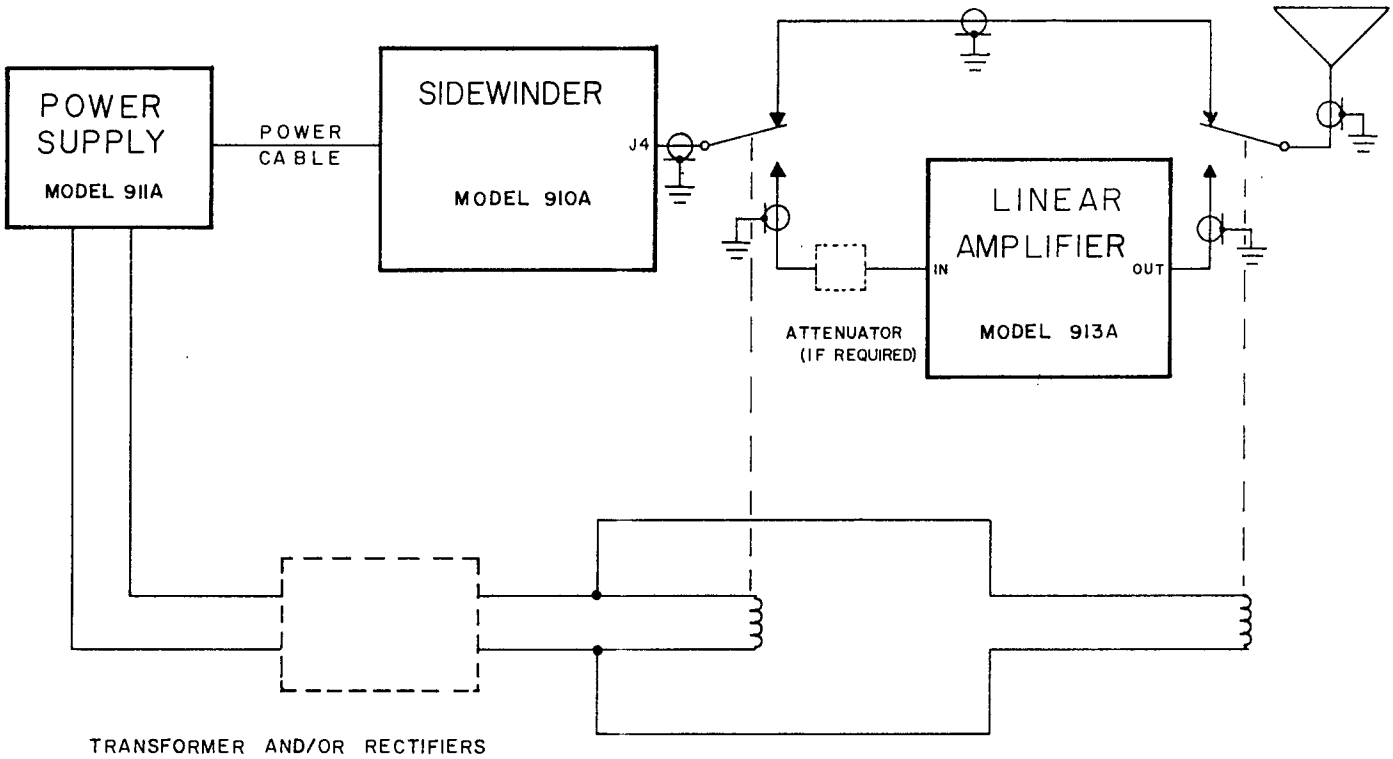

NOTE:

If o two-pole coaxial relay is available, or if two single pole relays are used with their coils connected in parallel, the Sidewinder is connected to the linear as shown in Figure 3.

If only one single-pole relay is available, connection to the Sidewinder may be made as in Figure 2. For this application, the jumper between pins 5 and 14 of the relay K1 must be cut. This jumper is easily accessible when the cover to the Sidewinder is removed, and is readily located as being the only jumper between pins on the antenna relay. Clip the jumper in the middle and move the ends 1/4" or so apart. This provides seperate inputs to the transmit and receive antenno circuits, as shown in Figure 2. When normal transceiver operation is again desired, simply push the severed ends back together and tack with a bit of solder. This method of changing the type of antenna connection eliminates from the receiver input the noticeable insertion loss of the antenna patch cables which would otherwise be required.

Figure 3

POWER CONNECTIONS

The model 910A Sidewinder will operate from the Gonset 901A, 902A, 911A, and the 912A power supplies. If difficulty is experienced when operating the Sidewinder from the early 901A power supplies due to marginal pull-in of the T/R relays, it may be corrected easily by connecting a 500 to 1000 mfd, 20 volt capacitor in parallel with C6B. See schematic number 510-129 supplied with the 901A power supply. It is recommended that the new models (911A or 912A) be used with the 910A Sidewinder.

In the event that a power supply other than the above Gonset models is used, extreme caution is required, as damage could result from incorrect connections or voltages from power supplies other than Gonset units. The user should be familiar with the technicalities involved before using another supply.

Figure 4 illustrates the power connector as seen from the inside of the Sidewinder.

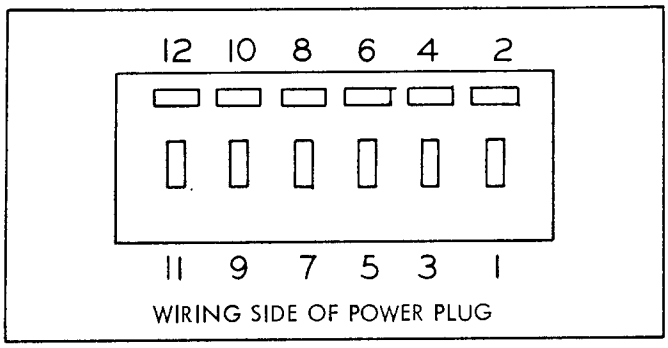

1. 12 v, Audio
2. 12 v, P. C. Card
3. Bias Voltage, -22.0 vdc
4. Filament Voltage
5. Screen Voltage, +200 vdc
6. B+ Voltage, +300 vdc
7. Speoker
8. T/R Relay
9. Power ON/OFF
10. Power ON/OFF
11. Ground
12. Spore

Figure 4

MOBILE NOISE SUPPRESSION

Equipment operating in this frequency range is highly vulnerable to interference caused by such things as ignition sparks, generator noise, static discharge from wheels, static drain from a moving vehicle, regulator noise, etc. In all cases an attempt should be made to identify the source of the interference before attempting to correct it. To oid in the proper identificotion of such interference, the chart in Figure 5 has been provided.

AUDIBLE CHARACTERISTIC	SOURCE	CHECK	SUPPRESSION
Popping Sound	Ignition	Noise varies with engine speed. Stops when ignition is switched off.	A. Use heavy copper grounding braid to bond each corner of the engine block to chassis ground. B. Instoll radio resistance wiring.
High Pitched Whine	Generator	Noise varies with engine speed and will continue when ignition is switched off until engine stops.	A. Install a .25 to .5 mfd coaxial capacitor at the generator in series with the armature lead. B. Install a hand wound choke in series with the generator field. *See Note.
Rasping Sound	Voltage Regulator	Arcing voltage regulator contacts.	A. Install a 0.25 to 0.5 mfd coaxial capacitor at the battery terminal in series with the battery lead and at the generator terminal in series with the armature lead.
Hissing Sound	Gauges	Disconnect one at a time until guilty gauge is found.	A. By-pass gauges at terminals with a 0.1 to 0.5 mfd capacitor.
Low Pitched Clicking Sound	Oil Sender	Noise varies with oil pressure, stabilizes at maximum oil pressure.	A. Install a 0.25 to 0.5 mfd capacitor from gauge lead terminal to chassis ground.
Irregular Popping Sound	Wheel Static	Noise stops when brakes are applied.	A. Install grounding brushes or springs under hub caps.
Regular Popping Sound	Tire Static	Noise is worse at 30-50 mph.	A. Put anti-static powder in tires.
All Types	Antenna Cable Ground	Ground connection at base of antenna.	A. Make firm mechanical and electrical ground for coaxiol cable from the antenna.

Figure 5, MOBILE NOISE SUPPRESSION CHART

*CAUTION: Do not install bypass capacitor at the field terminal.

ANTENNA

The 6 meter bond is borderline territory between the DX frequencies ond those normolly employed for local work. Thus, just obout every form of wove propagation found throughout the radio spectrum oppeors, on occosion, in the 50 megocycle region. For this reason, the choice of on ontenno will depend lorgely upon the type of operotion the user intends.

For mobile operotion, the stondard mobile whip cut to 50 mc (54"), should prove sotisfoctory if looded and tuned properly. For maximum signol, the ontenno should be os long os possible, consistent with wove-length, with o low-loss, high-Q looding coil, mounted foirly high on the body of the cor ond corefully tuned to exact resononce. The oddition of a motching network ot the feed point is of some help, ond at times moy be o necessity, to get the SWR below 2:1. Top copocitive loading will decreose the omount of coil necessory ond roise the efficiency of the ontenno by reducing coil losses. Always use on SWR bridge in tuning the mobile ontenno for o Standing Wave Rotio of 2:1 or better. The various antenno monufocturers include instollotion ond tuning procedures with their products.

If portoble use of the Sidewinder is desired in "tronsmitter hunts", 'field doys', etc., the Gonset telescoping ontenno, part number 621-018, is ovoiloble ot modest cost.

For fixed stotion operotion, vorious ontennas will perform sotisfoctorily, however, the multi-element beom is perhops the best. The ontenno hondbook published by the ARRL should be consulted in determining the type of ontenna which will afford the user the optimum efficiency for his porticulor opplicotion.

RECEIVE OPERATION

1. Before the unit is turned on, moke sure thot the Mike Goin knob is pushed in to prevent any occidentol tronsmissions.

2. Rotate the AF Goin knob about holf way; this will turn on the unit ond allow oudio output.

   NOTE: The tuning dial and the "S" meter will not be illuminoted unless the RF Goin knob is pulled out. This switches on the diol lomps ond the filoments in the transmitter finol stoges. For conserving bottery power in mobile receive operation, the RF Goin knob may be left in.

3. Select the desired mode of operotion with the mode switch: CW, USB, or AM.

4. Turn the Sector switch to the desired sector of the bond to be monitored:

   50 = 50-51 megocycles,
   51 = 51-52 megocycles,
   52 = 52-53 megocycles,
   53 = 53-54 megocycles.

5. Rotote the RF Goin control fully clockwise until the "S" meter shows some deflection ond receiver noise con be heord from the speoker.

6. Use the coorse tune frequency knob to tune ocross the selected sector of the band. See Step 4. The frequency diol is divided into ten equol ports which spon the one-megocycle selected by the sector control. Eoch of these ten equol ports is divided into sections 25 kc wide. See Figure 6. When the desired frequency is found, use the fine tune knob for closer odjustment. When the tronsmitter is being used also, the finol receive odjustment for "noturolness" of voice should olwoys be made with the "Offset Tuning" control. This control tunes only the receiver. Since it does not disturb the tronsmit frequency, 'tracking' or re-tuning on the port of the other operotor is ovoided.

7. If the received stotion is extremely strong, the RF Gain control moy be rotated counterclockwise for cleorest reception ond reduction of background noise. Note, however, thot the "S" meter does not function if the RF Goin control is not fully advanced.

8. If the transmitter is switched from VFO to crystol control while listening to o stotion on the receiver, it may be necessory to re-tune the receiver slightly for continued reception. This is o normol consequence of switching Q19 from o receive VFO buffer to o transmit crystal oscillotor, ond hos no practical offect on dial occurocy, os the frequency shift is less than 1 kc.

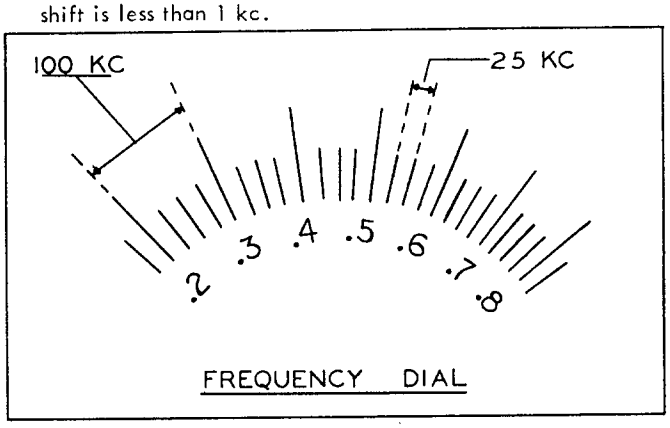

ALL SMALL DIVISIONS ARE 25 KC, INCLUDING THE ONES BELOW "0" AND ABOVE "1.0".

Figure 6

TRANSMIT OPERATION

NOTE: For proper tronsmitter performonce, the Sidewinder dial lomp must be operoting os it forms a part of the filoment circuit. Should this lomp burn out, the recommended replocement is o GE long-life type #755, Gonset port number 471-024. If this lomp is not reodily ovoiloble, o #1847 medium life or on ordinory #47 lomp moy be used os a substitute. All these lomps ore electricolly identicol, but the life of the #47 lomp is considerobly shorter thon that of the recommended lomp.

1. Do not pull out the Mike Goin knob or press the microphone press-to-tolk switch until you ore reody to tronsmit.

2. Rotote the AF Goin knob clockwise to turn on the unit.

TRANSMIT OPERATION (contd)

3. Pull out the RF Gain knob to turn on the filoments in the finol transmitter stages.

4. Operating Frequency: The transmit section of the Sidewinder may be either crystol controlled or VFO tuned. The crystal socket on the front panel is one of four that may be used for crystal control. The other three are inside the Sidewinder and are readily accessible by removing the top cover of the Sidewinder. The VFO/Crystal switch on the front panel selects the operating crystal with the front panel socket being wired to position 1. If VFO operation is selected, the following procedure should be used to determine frequency:

   The main tuning dial covers a band segment one megacycle wide. The frequency at the low or 'zero' end of the dial is selected by the frequency sector switch ond the dial tunes over the megacycle above. Thus, if the sector switch is on 51, and the dial is on .8, the operating frequency is 51.8 megacycles. The minor dial divisions are 25 kcs aport.

5. To tune-up the transmitter for any mode of operation, use this procedure:

   A. Turn the mode selector knob to "CW".

   B. Pull out the Mike Gain knob which will switch the unit to transmit.

   C. Use the PA Tune knob to obtain maximum meter deflection.

   D. Use the Ant Tune knob to increase the RF meter deflection.

   E. Repeot steps C and D until further tuning will not increose the RF meter reading.

   F. Push the Mike Gain knob back in.

      NOTE: The PA Tune and the Ant Tune controls have no stops and are continuously voriable.

      NOTE: The Ant Tune control is normally very broad. Critical tuning, great interaction with the PA Tune control, or, failure of this control to tune-up properly, are all indications of a seriously mis-motched antenna system which should be corrected if the Sidewinder is to operote properly.

      In some parts of the band, particularly with a slightly reactive antenna, the output meter may go off scale when the Sidewinder is transmitting in the "CW" mode. In order to tune-up with this condition, switch to the "USB" mode and adjust the Corrier Balance control for convenient reading on the meter, and then tune-up as usual.

   G. Select the desired mode of operation as per step 6, 7, or 8; for "CW", "USB", or "AM" respectively.

6. CW Operation; (after completing step 5)

   A. Switch to "CW" mode and plug in your key (lower jock on the left side, rear).

   B. Pull out the Mike Gain knob to use the key.

   C. Push in the Mike Gain knob to receive.

7. USB Operation; (after completing step 5)

   A. Turn the mode selector knob to "USB".

   B. Pull out the Mike Gain knob.

   C. Turn the Corrier Balonce knob slowly clockwise and wotch the RF meter.

      NOTE: This control is a ten-turn device and must be adjusted carefully. If the meter reading increases, the null has been passed and the control must be rotated in the opposite diredtion. If the meter reading decreases, ollow it to go through the null and bring it up until it indicates the lowest division on the meter scale. Using the slot on the knob for reference, note its position in relation to the printing on the panel behind it. Now slowly rotate the knob the opposite way; the meter reading should decreose to a null and then increose. Bring the meter reading back to the same scale division used previously. Again using the dot on the knob for reference, note its angular relation to the first position when the meter indicated the same scale division. The correct setting will be a point that is half-way between these two positions, and the meter should reod below scale.

8. AM Operation; (after completing step 5)

   A. Turn the mode selector knob to "AM".

   B. Turn the Mike Gain control fully counterclockwise and pull it out.

   C. Set the carrier by adjusting the Carrier Balance control until the output meter reads 3 on the 0 to 10 scale. Push the Mike Gain control back in after this adjustment is completed.

   D. Press the microphone press-to-talk switch and speak into the microphone.

   E. While speoking into the microphone, rotate the Mike Gain control until the RF meter just 'kicks' positive.

Crystal Controlled Operation for any Mode:

The 910A Sidewinder requires fundamental-mode crystals operating between 5.50 and 6.5 mc for transmitter spot frequency control. Use of crystols outside this range will result in spurious response and is not recommended. The crystal sockets are designed for HC-6 holders with .050" diameter pins. If the exact frequency of operation is not too critical, within 15 kc or so, either series or parallel mode crystals may be employed. The oscillator is purposely designed to be tolerant of low-activity crystals, so that 'junk-box' crystals may be ground to frequency with good probability of success. Crystals in older type holders may be fitted to the front panel socket by meons of an adapter.

When an exact frequency is desired, within 1 or 2 kc, a series-mode crystal in the correct holder should be ground to your frequency. The transmitter output frequency will be the crystal frequency minus 5.5 mc, plus the frequency indicated by the "Sector" switch. For instance, o 5.650 mc crystal would provide output at 50.150 mc when the "Sector" switch is set at 50. The same crystal produces a signal 51.150 mc when the "Sector"

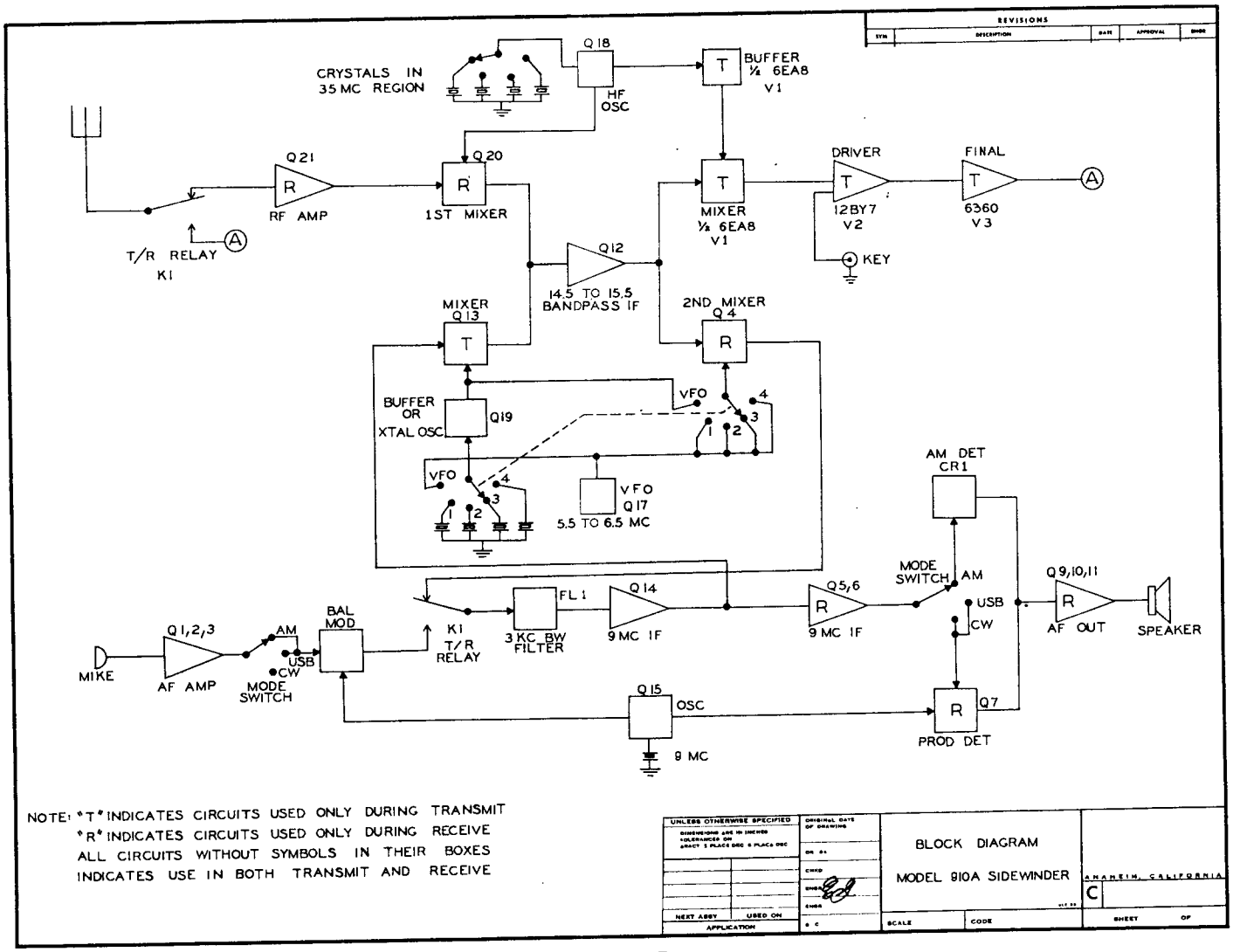

Figure 7

switch is ot 51, ond so forth. Thus, eoch single crystol employed provides the copobility of four crystol controlled points within the 6-meter bond. The following chort will oid in determining your operoting frequency:

Sector Control		*Crystol Frequency		Operoting Frequency
50	+		-5.5 =	
51	+		-5.5 =	
52	+		-5.5 =	
53	+		-5.5 =	

*Insert the frequency of the crystol in mc to determine the operoting frequency.

In oddition to the crystol socket on the front ponel, three sockets are provided internolly which moy be selected by the front ponel crystal switch for more frequently used crystols. Access to these sockets is provided by removing the Sidewinder cover ond the VFO (center) module cover. The socket neorest the reor of the Sidewinder is selected by switch position #2, the middle socket by switch position #3, ond the socket neorest the front by switch position #4. The #2 crystol socket (rear) is provided with a trimmer so thot the crystol instolled in this socket moy be pulled a few kilocycles to the exoct frequency. This trimmer is the protruding screw locoted neor the crystol sockets.

CAUTION: Do not turn this screw out (CCW) to more thon 5/8" obove the chossis, or the trimmer will be domoged. Also, toke core not to turn the similor trimmer on the opposite end of the VFO os this trimmer is only used for VFO colibrotion.

NOTE: It is difficult if not impossible to domoge the Sidewinder by improper tune-up. It is possible, however, to produce o poor quolity signol by coreless operoting techniques. Therefore, it is recommended thot the obove instructions be understood ond followed corefully.

THEORY OF OPERATION - Receive

The receive portion of the Sidewinder is on oll tronsistor, duol conversion, superheterodyne unit, employing mony specially designed circuits to provide high performonce ond reliobility in o compoct, rugged enclosure.

The block diogrom (Figure 7) will oid in the following circuit description. The signal from the ontenno is fed to the RF omplifier, Q21, by the operation of the T/R reloy, K1. A tuned circuit oheod of the RF omplifier provides on impedonce motch to the omplifier from the ontenno os well os ottenuoting the noise and unwonted signols outside the 6-meter bond. The RF omplifier, Q21, is coupled to the first mixer, Q20, by woy of

bandpass circuitry designed to pass signals within the 6-meter band. The high frequency injection signal to the first mixer originates in the crystal controlled oscillator, Q18, and is heterodyned with the input signal to produce a nominal 15 megacycle signal which is amplified at the first IF amplifier, Q12. This IF amplifier, double-tuned at both the input and the output, amplifies all the converted frequencies between 14.5 and 15.5 megacycles, and feeds them to the second mixer, Q4. The other input to the second mixer is from the VFO, Q17, which is manually tuned by the main tuning dial. A switch allows the VFO to be tuned to any part of the dial without disturbing transmit frequency when the transmit section is crystal controlled, or, by using the Offset Tuning control, the received signal may be tuned 1-1/2 kc from the main tuning dial setting without changing the transmitted frequency. The products of the second mixer, now at approximately 9 megacycles, are coupled to the crystal lattice filter, FL1, and tuning of the VFO determines which of the mixer products will be at the correct frequency to be passed by the filter. The norrow band Output of the filter is fed into the 9 megocycle IF amplifiers, Q14, Q5, and Q6, and then coupled to the detectors.

In the "USB" and "CW" mode, the signal from Q6 and the carrier insertion signal from the crystal controlled oscillator, Q15, are heterodyned in Q7 which is used as a product detector. In the "AM" mode, Q7 becomes an emitter follower and the "AM" detection is done by CR1.

In all modes, the audio signal from the detectors is fed into the audio driver, Q9, by way of the AF Goin control, and then coupled to the class B audio amplifier, Q10 and Q11, which drives the speaker.

THEORY OF OPERATION - Transmit

The transmitter portion of the Sidewinder utilizes dual conversion, crystal lattice filter, and the latest solid-state circuitry where design permits. Only the mixer, driver, ond final amplifier are vacuum tube.

The block diagram (Figure 7) illustrates the following circuit description:

The basic carrier signal originates in the crystal controlled oscillator, Q15, and is fed to the modulator by the mode selector switch. If "AM" or "USB" operation is selected, audio is combined with the carrier in the modulator. If "CW" operation is selected, the audio input is disconnected.

The audio input to the modulator for "AM" and "USB" operation comes from the speech amplifier transistors, Q1, Q2, and Q3. The input from the microphone is coupled to Q1, a high impedance emitter follower, which feeds the audio signal through the Mike Gain control to Q2 which drives emitter follower, Q3.

During "USB" operation the balanced modulator operates normally to cancel out the carrier, leaving the oudio as sidebands. The unwanted lower sideband is then suppressed in the crystal lattice filter, FL1, and the desired upper sideband is fed into the first IF, Q14.

For "AM" operation, the balanced modulator operates slightly unbalanced so that a carrier and a normal pair of sidebands are fed into the filter, FL1. The filter eliminates the lower sideband and partly attenuates the carrier, leaving the reduced carrier and the upper sideband to be fed into Q14, the first IF amplifier. The original carrier level is so adjusted that this signal is equivalent to a normal, 100% modulated "AM" signal, but does not occupy so wide a band.

The first IF amplifier, Q14, amplifies the narrow band signal from the crystal lattice filter, FL1, and then feeds the signal to the first mixer, Q13, for the first conversion. The other signal for the first mixer is either VFO or crystal controlled, determined by the front panel VFO/Crystal switch. In the VFO position, the frequency, ranging from 5.5 to 6.5 megacycles, is manually adjusted by the main tuning dial. For crystal operation, frequencies within the same range are used, but they are derived from Q19 which now functions as a crystal-controlled oscillator for the transmitter. The output of the first mixer, Q13, is the sum of the two input frequencies, ond is, therefore, between 14.5 and 15.5 megacycles. This signal is then fed to the IF amplifier, Q12, which has double-tuned circuitry at both the input and the output and is designed to amplify only those signal within the 14.5 to 15.5 megacycle ronge. The amplified signal is passed on to the second mixer, V1, which is the pentode section of 6EA8.

At the second mixer the signal is combined with the signal from the locol oscillator, Q18. The oscillator is coupled to the buffer amplifier which is the other half of the 6EA8 and produces the amplified, high frequency signal required at the second mixer. The product of the second mixer now falls within a one megacycle segment of the 6-meter band, determined by the crystal selected for the high frequency local oscillator, Q18. This crystal is selected by the front panel Sector control. The product of the second mixer is coupled to the band-pass driver stage, V2, which is tuned to accept signals within the 50-54 megacycle range. Grid-block keying is provided in this stage for "CW" operation. The output of the driver, V2, is inductively coupled through tuned circuits to the final amplifier, V3. The final amplifier operates class AB_1 with 20 watts PEP (peak-envelope-power) input and is link coupled to the antenna with adjustable tuning and loading circuits.

ALIGNMENT INSTRUCTION

A. Introduction

The following test procedures, followed in sequence, are required for complete alignment of the Sidewinder. However, the technician may use only that portion which is necessary for a given situation because only a major component failure (IF transformer, RF coils, crystals, etc.) will cause serious misalignment of any circuit. Complete realignment of the entire Sidewinder should never be necessary.

The owner is cautioned that this alignment procedure requires well calibrated test equipment which may not be readily obtained, and that any attempt to align the Sidewinder without the proper equipment will invalidate the warranty. If there is any problem of this nature, see the closest Gonset Dealer.

B. VFO Tracking

Track the VFO so that the frequency is 5.5 mc, ±2 kc, at '0' on the dial, and 6.5 mc, ±2 kc, at '1.0' on the dial. The low end is adjusted with L1, and the high end with C29 (see Figure 8). Alternate between these two adjustments until the VFO will track as follows: (Use o Frequency Meter or Counter) Set the VFO to 5.6 mc, ±1 kc, and then check the VFO dial. It should indicate within 1/2 scale division of '0.1'. Make the same check at 5.8 mc, 6.0 mc, 6.2 mc, and 6.4 mc. The VFO dial should indicate '0.3', '0.5', '0.7', and '0.9' each time, within ±1/2 scale division.

NOTE: It may be necessary to repeat the L1 and C29 odjustments several times before the VFO will track properly.

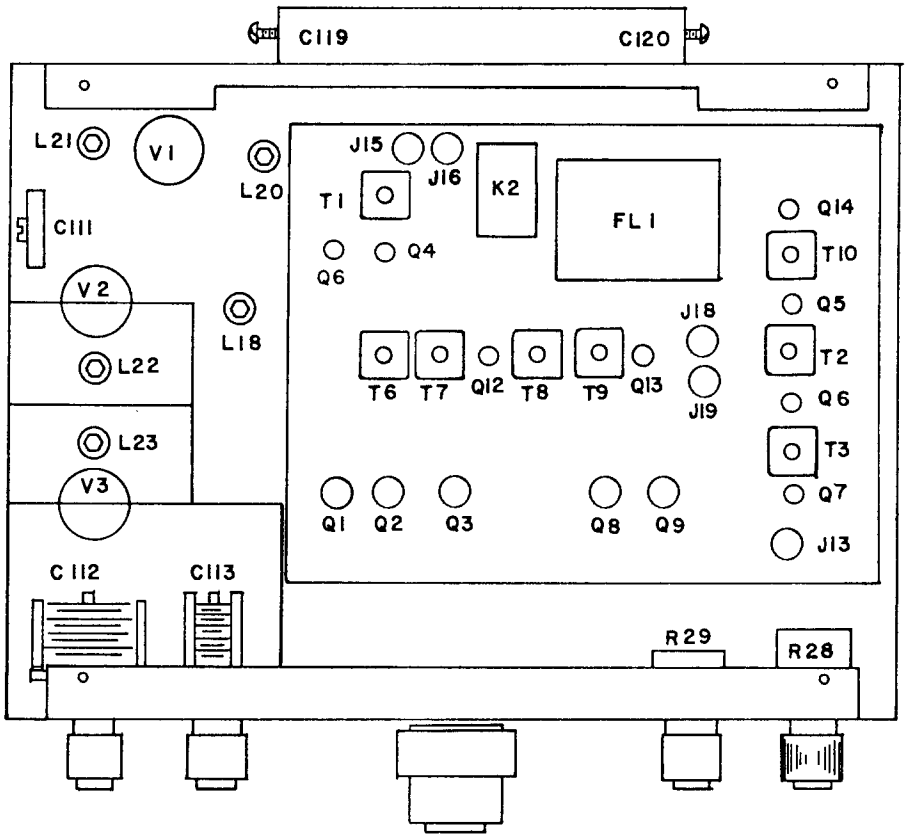

Figure 8, Bottom View

C. 9 MC IF Alignment

Before starting this alignment procedure make sure that the 'S' meter is zeroed. To check the 'S' meter, disconnect the antenna, turn the RF GAIN knob fully clockwise and adjust the 'S' meter with the adjustment located on the right side near the top of the case. See Figure 9. Allow the unit to warm up about five minutes before making this adjustment.

Operate the Sidewinder in the receive mode, "AM", with the RF GAIN knob fully clockwise. Connect a signal generator directly into J16 on the main printed circuit card. (disconnect the plug which is normally in this jack). Set the signal generator to 9 mc with 30% modulotion at 1000 cycles.

Tune the generotor frequency slightly and increase the output as required until the signal is audible from the speaker. "Rock" the generator frequency for maximum audio output, so that the signal is centered in the filter passband. Align T1, T10, T2, and T3, see Figure 8, for maximum recovered audio at the speaker. Note that on T2 and T3 two different peaks can be obtained, both of which are true peaks, but one of which positions the slug for tighter coupling to the secondary and thus provides higher gain. The higher gain peak should normally be used, unless this produces so much gain that oscillation occurs, in which case the olternate peak should be selected.

When the 9 mc IF is properly aligned, 10 to 20 microvolts of generator output should produce 5 volts peak-to-peak of audio across the speaker terminals, if the AF GAIN knob is fully clockwise.

D. 15 MC IF Alignment

Connect a sweep generator, set to 15 mc, to J18 an the moin printed circuit card. See Figure 8. Couple an oscilloscope with a demodulator probe, such as the RCA WG-291, to pin 2 of V1, with a two or three twist capacitance gimmick or a maximum 1 pf capacitor. Provide fixed markers at 14.5 and 15.5 mc. Remove the 9 mc injection from Q13 by disconnecting the plug from J15.

Set the controls on the Sidewinder as follows:

RF GAIN. . . . . .PUSHED IN (filaments off)
MODE. . . . . .AM
MIKE GAIN TR . . .PULLED OUT
AF GAIN. . . . . .TURNED ON

Align L18, T6, T7, T8, ond T9 to obtain a flat response within 3 db over the 14.5 to 15.5 mc range.

NOTE: Some 'staggering' of the tuned circuits will be required, and can be easily seen on the oscilloscope.

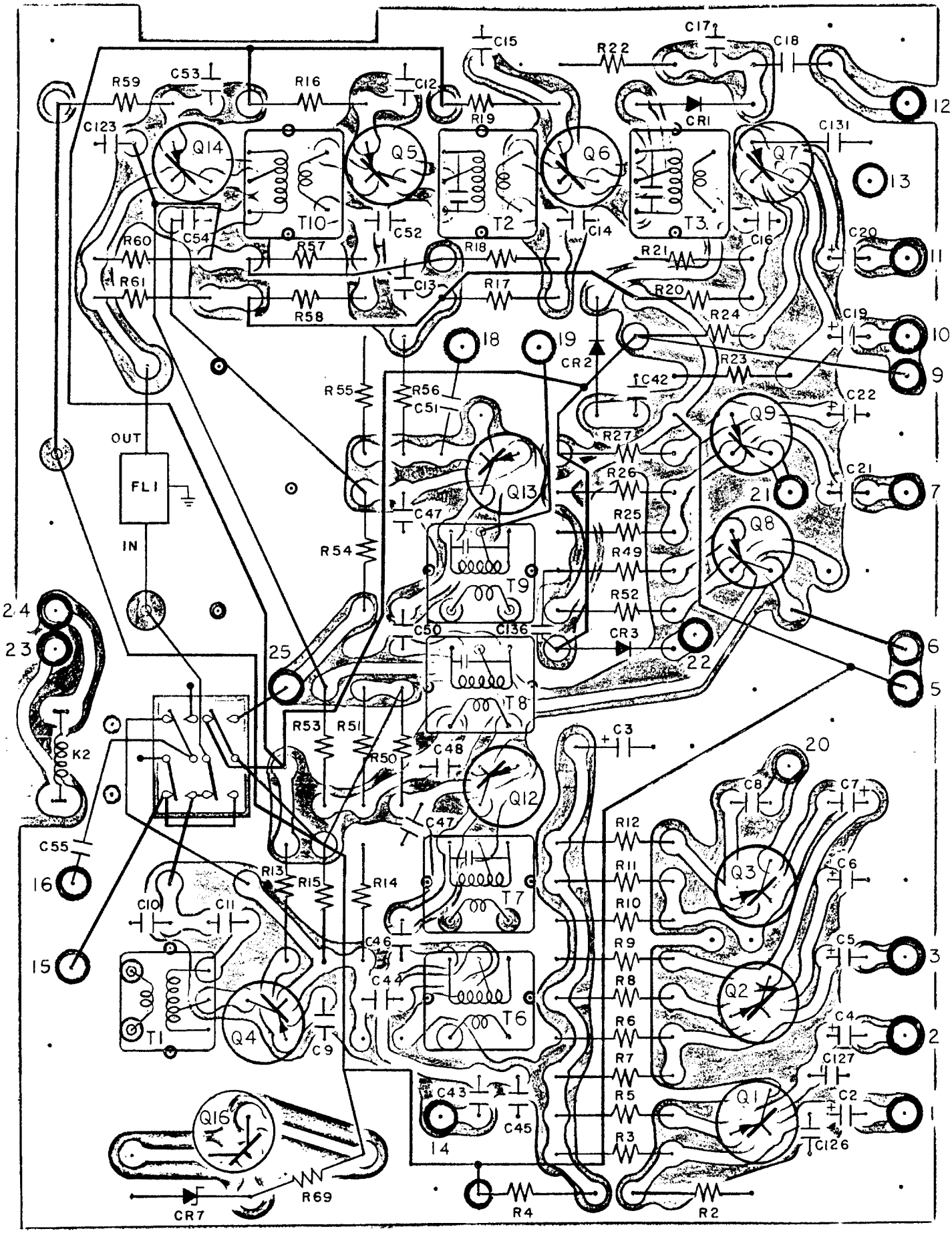

C15
C17
C18
R22
R59
C53
R16
C12
R19
CR1
12
C123
Q14
Q5
Q6
Q7
C131
13
T10
T2
T3
C54
C52
C14
C16
C20
R60
R57
R18
R21
11
R61
C13
R17
R20
R58
R24
C19
10
18
19
CR2
R23
9
C42
R55
R56
C51
C22
Q9
OUT
R27
FL1
Q13
R26
C21
21
7
C47
R25
Q8
IN
R54
R49
T9
R52
24
C50
C136
CR3
23
25
22
6
5
T8
R53
R51
C3
20
K2
R50
C48
Q12
C8
C7
C47
R12
C55
R13
R15
R14
R11
Q3
C6
16
C10
C11
T7
R10
C46
R9
C5
3
15
C44
R8
Q2
T6
R6
C4
2
T1
Q4
C9
R7
C127
C43
R5
Q1
C2
1
Q16
C45
14
R3
C126
R69
CR7
R4
R2

Figure 12

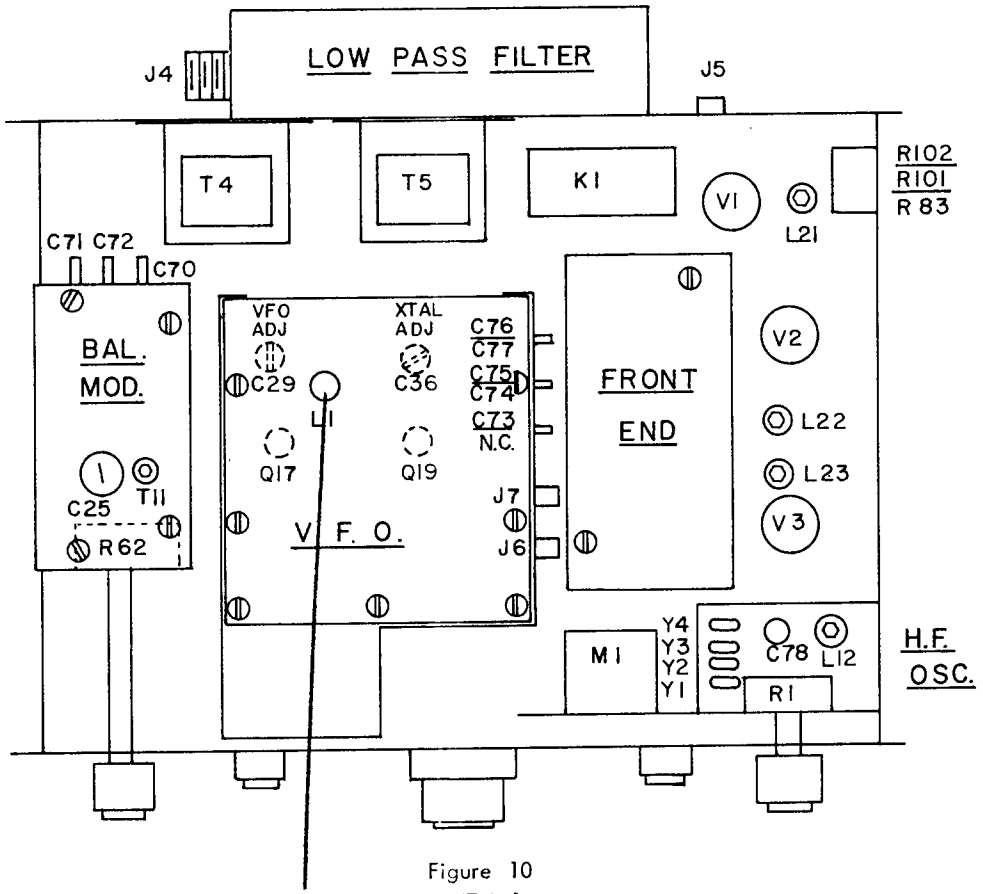

Figure 10

VFO DIAL CALIBRATION

E. HF Crystal Oscillator Adjustment

Remave, from J8, the RCA plug coming from the HF oscillator, and connect this plug ta the input af a Frequency Caunter capable af operating ta at least 40 megacycles. Turn an theSidewinder and set the Sectar switch ta "50". Adjust L12 until the Frequency Caunter reads 35.50 mc, ±3 kc. Then switch ta 51, 52, and 53 with the Sectar switch. The Frequency Caunter shauld read 36.5 mc, 37.5 mc, and 38.5 mc, respectively, all ±3 kc. It shauld be possible ta find a campramise adjustment af L12 where all faur crystals are within talerance.

If a Frequency Caunter is unavailable, a heteradyne-type frequency meter may alsa be used. Cannect an RCA jack, having a 3 or 4 turn laap appraximately an inch in diameter, ta the autput plug af the ascillatar, ta radiate the signal inta the frequency meter.

The apen circuit valtage af this stage is appraximately 1 valt rms.

F. Frant End and First Receive Mixer Alignment

Cannect an oscilloscope by means af a demadulator prabe, such as a RCA WG-291, directly acrass a 0.2 mh RF choke which has been cannected fram J10 ta graund. See Figure 8. Inject a law level signal, swept at 50 mc, inta the antenna jack fram a generator of known accuracy. Use an external signal generatar ta supply markers at 50, 52, and 54 mc. This generatar may be adjusted ta each frequency as required.

Adjust L15 and L16 ta abtain a respanse fram 50 ta 54 mc that is flat within 3 ta 4 db. L17 and L14 shauld alsa be adjusted at this time, but these slugs will primarily affect the amplitude af the respanse with anly a secandary effect an the bandpass. A slight readjustment af L17 and L14 is sametimes necessary ta 'smaath-aut' a raugh respanse.

G. Balanced Madulatar Adjustment

Switch the Sidewinder ta "CW", transmit made. Discannect the plug fram J15 an the main printed circuit card. See Figure 9. Cannect an RF VTVM acrass the plug and then tune T11 far a maximum autput.

Switch the Sidewinder ta "USB" and adjust the CARRIER BALANCE cantral, R62, and the trimmer capacitar, C25, far a minimum. Use a fiber screwdriver when adjusting the trimmer capacitar. It is best ta adjust the trimmer in small steps, and then rotate the CARRIER BALANCE control through the null. A trimmer positian shauld be faund at which the CARRIER BALANCE cantral will tune thraugh a null af less than 1 millivalt af RF.

RED - Tip + BRAID (GD
wh - middle
BL - Top

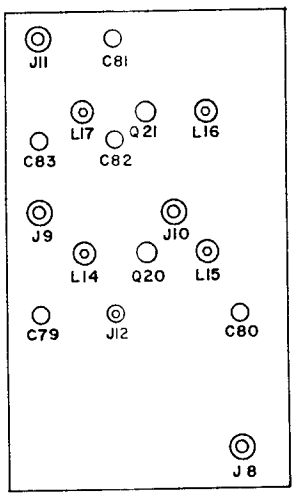

Figure 11, RF Module

H. 9 MC Oscillator Adjustment

Switch the Sidewinder to the transmit mode with the filaments off, (RF GAIN knob pushed in). Remove the plug from J18 on the main printed circuit card. See Figure 9. Connect an RF VTVM to the emitter of Q13, and adjust C23 to obtain 65 millivolts rms.

NOTE: When this voltage is correctly adjusted, the oscillator frequency is correctly positioned on the bandpass of the crystal lattice filter.

I. Tronsmit Driver Interstage Alignment

Disconnect L18 and C109 from pin 2 of the 6EA8, V1, and connect a 50 mc sweep generator. Make sure that the generator cable is properly terminated and use a coupling copacitor between the cable and the tube to prevent shorting out R44. Couple an oscilloscope with a demodulator probe, such as the RCA WG-291, to pin 3 of V3 with a one-turn gimmick. Set C112 fully open.

Set the controls of the Sidewinder as follows:

RF GAIN. . . . . PULLED OUT
CW-USB-AM . . . . . USB
MIKE GAIN TR. . . . PULLED OUT
AF GAIN . . . . . TURNED ON

Adjust L21, L22, and L23 for maximum output and a flat response within 2 or 3 db between 50 and 54 mc. Adjust the neutralization capacitor, C111, to eliminate any instability noted on the output trace. Instability is evidenced by sharp changes in the effective bandpass, appearing as a "sawtooth" pattern over all or part of the bandpass when C111 is badly misadjusted.

J. Transmit Doubler and Driver Grid Alignment

Set the controls on the Sidewinder to transmit at 52 mc. Monitor the output with the Sidewinder's own output meter and adjust L20 for maximum meter deflection. See Figure 10.

K. Transmit Center Frequency Adjust

Set the "Offset Tuning" control to the center of its range. Set the VFO to 0.5. At this VFO dial setting the VFO is actually operating at 6.0 mc. Monitor this 6 mc signal on a communications-type receiver with the BFO turned on. Key the Sidewinder from the receive to transmit mode, but with the transmitter filaments turned off. Adjust R83 until no shift of the beat frequency is noted as the unit is switched back and forth from transmit to receive. This adjustment is not critical as any slight T/R offset is taken care of during actual operation by the "Offset Tuning" control.

L. "S" Meter Sensitivity Adjust

Operate the Sidewinder normolly on 'receive' with the RF Gain control fully advanced. After normal warm-up, zero the "S" meter with no signal input. Then supply 100 microvolts of signal (unmodulated), to the antenna input, using a well calibrated signal generator set to around 52 mc. Tune in the signal and adjust R101 until the "S" meter reads "S9".

M. Performance Test

After alignment is completed, the performance of the Sidewinder may be tested by operating the unit in the "CW" mode, and 'tuning up' into a calibrated dummy load at a number of points within the six-meter band. Some variation in power output is normal because of the bandpass circuitry employed in the Sidewinder, but with proper alignment, the output power will show a maximum variation of from 8 to 15 watts.

If the average "CW" power output across the band is greater than 11 or 12 watts, the 9 mc drive should be reduced by turning C23 clockwise until this average is obtained. This will place the carrier frequency even further down the filter skirt than the original adjustment in step "H", and provide better carrier suppression. Do not attempt to obtain greater than the rated output by omitting this drive adjustment, as any added output produced will result in excess distortion in the "AM" and "USB" modes.

PARTS LIST

SCHEMATIC SYMBOL	DESCRIPTION	GONSET PART NUMBER
R98	Resistor, 2.7K, 1/2W, 10%	042-272
R99	Resistor, 22K, 1/2W, 10%	042-223
R100	Resistor, 10K, 1/2W, 10%	042-103
R101	Potentiometer, 5K Linear	051-009
R102	Potentiometer, 1K, "S" Meter	051-008
L1	Coil, VFO	012-605
L2	RF Choke, 600 uh	027-019
L3	RF Choke, 12 uh	027-116
L4	RF Choke, 33 uh	027-117
L5	RF Choke, 33 uh	027-117
L6	RF Choke, 33 uh	027-117
L7	RF Choke, 33 uh	027-117
L8	RF Choke, 12 uh	027-116
L9	RF Choke, 12 uh	027-116
L10	RF Choke, 12 uh	027-116
L11	RF Choke, 12 uh	027-116
L12	Coil, Oscillotor, HF	012-638
L13	RF Choke, 1.8 uh	027-078
L14	Coil, mixer input	012-637
L15	Coil, DT Sec	012-636
L16	Coil, DT Pri	012-635
L17	Coil, Antenna input	012-634
L18	Coil, 15 mc matching	012-441
L19	RF Choke, 1.8 uh	027-078
L20	Coil, HF Buffer	012-639
L21	Coil, Driver input	012-640
L22	Coil, Driver, output	012-467
L23	Coil, Finol input	012-468
L24	Coil, Final tonk	011-126
L25	Coil, Antenna link	011-127
L26	RF Choke, 8.2 uh	027-079
L27	RF Filter coil	012-641
L28	RF Filter coil	012-641
L29	RF Filter coil	012-641
L30	RF Filter coil	012-641
L31	RF Choke, 35 uh	027-115
Q1	Transistor, GC 815	476-012
Q2	Transistor, GC 815	476-012
Q3	Transistor, GC 815	476-012
Q4	Transistor, GC 814A	476-031
Q5	Tronsistor, GC 814A	476-031
Q6	Transistor, GC 814A	476-031
Q7	Transistor, GC 814A	476-031
Q8	Tronsistor, GA 2319	476-032
Q9	Transistor, GC 815	476-012
Q10	Transistor, GC 4001	476-029
Q11	Tronsistor, GC 4001	476-029
Q12	Transistor, GC 813	476-027
Q13	Transistor, GC 814A	476-031
Q14	Transistor, GC 814A	476-031
Q15	Transistor, GC 814A	476-031
Q16	Transistor, GA 2319	476-032
Q17	Transistor, GC 814A	476-031
Q18	Transistor, TI 391	476-028
Q19	Transistor, GC 814A	476-031
Q20	Transistor, TI 391	476-028
Q21	Transistor, TI 391	476-028

SCHEMATIC SYMBOL	DESCRIPTION	GONSET PART NUMBER
T1	IF Transformer	014-112
T2	9 mc IF Tronsformer	014-111
T3	9 mc IF Transformer	014-111
T4	Driver Transformer	272-054
T5	Output transformer, audio	272-055
T6	IF Transformer	014-112
T7	15 mc IF tronsformer	014-110
T8	IF Transformer	014-115
T9	15 mc IF transformer	014-110
T10	IF Transformer	014-112
T11	9 mc BM Transformer	014-113
Y1	Crystol, 50 mc	486-444
Y2	Crystol, 51 mc	486-445
Y3	Crystal, 52 mc	486-446
Y4	Crystal, 53 mc	486-447
Y5	Crystal, 8.998 mc	486-439
FL1	Filter	487-006
V1	Electron tube, 6EA8	472-110
V2	Electron tube, 12BY7A	472-029
V3	Electron tube, 6360	472-503
CR1	Diode, 1N34	475-001
CR2	Diode, 1N34	475-001
CR3	Diode, 1N34	475-001
CR4	Diode, 1N34	475-001
CR5	Diode, 1N34	475-001
CR6	Diode, 1N34	475-001
CR7	Diode, zener, 1N765A	475-021
S1	Switch, bal. mod.	171-153
S2	Switch, VFO	171-154
S3	Switch, HF crystal	171-152
M1	Meter	112-049
PL1	Lamp, #755	471-024
K1	Relay, TF-154-6C or equol	111-123
K2	Relay, PC	111-116
J1	Mike Jock	342-002
J2	Key Jack	342-001
J3	Connector, 12 pin	344-171
J4	Ant. Jack	344-189
	Front Panel	441-042
	Feet, Rubber	222-001
	Top Cobinet Assembly	465-126
	Bottom Cobinet Assembly	465-127
	Dial Window	455-118
	Knob, 5/8" diometer	211-071
	Knob, 1" diameter	211-072
	Knob, 1-5/16" diameter	211-074
	Special Lever Knob	212-068
	Cobinet Lid Screws	259-851

PARTS LIST

SCHEMATIC SYMBOL	DESCRIPTION	GONSET PART NUMBER
C119	Capacitor, 3-12 pf, trimmer	089-041
C120	Capacitor, 3-12 pf, trimmer	089-041
C121	Capacitor, 120 pf, DM15, 5%	433-121J
C122	Capacitor, 27 pf, DM15	433-270J
C123	Capacitor, 510 pf, DM15	432-511J
C124	Capacitar, 100 pf, DM15, 5%	433-101J
C125	Capacitor, 10 pf, DM15, 5%	433-100J
C126	Capacitor, 100 pf, DM15, 5%	433-101J
C127	Capacitor, 100 pf, DM15, 5%	433-101J
C128	Capacitor, .01 mfd, ceramic	376-103Z
C129	Capacitor, 27 pf, DM15	433-270J
C130		
C131	Capacitor, .01 mfd, disc ceramic	376-103Z
C132		
C133		
C134		
C135		
C136	Capacitor, .01 mfd, disc ceramic	376-103Z
C137	Capacitor, .01 mfd, disc ceramic	376-103Z
C138	Capacitor, .01 mfd, disc ceramic	376-103Z
R1	Patentiameter, Mike Gain	052-148
R2	Resistor, 270K, 1/2W, 10%	042-274
R3	Resistor, 82K, 1/2W, 10%	042-823
R4	Resistor, 100Ω, 1/2W, 10%	042-101
R5	Resistor, 2.7K, 1/2W, 10%	042-272
R6	Resistor, 39K, 1/2W, 10%	042-393
R7	Resistor, 4.7K, 1/2W, 10%	042-472
R8	Resistor, 1K, 1/2W, 10%	042-102
R9	Resistor, 4.7K, 1/2W, 10%	042-472
R10	Resistor, 22K, 1/2W, 10%	042-223
R11	Resistor, 4.7K, 1/2W, 10%	042-472
R12	Resistor, 1K, 1/2W, 10%	042-102
R13	Resistor, 470Ω, 1/2W, 10%	042-471
R14	Resistor, 22K, 1/2W, 10%	042-223
R15	Resistor, 2.2K, 1/2W, 10%	042-222
R16	Resistor, 470Ω, 1/2W, 10%	042-471
R17	Resistor, 3.9K, 1/2W, 10%	042-392
R18	Resistar, 2.7K, 1/2W, 10%	042-272
R19	Resistor, 470Ω, 1/2W, 10%	042-471
R20	Resistor, 33K, 1/2W, 10%	042-333
R21	Resistor, 82K, 1/2W, 10%	042-823
R22	Resistor, 100K, 1/2W, 10%	042-104
R23	Resistor, 2.7K, 1/2W, 10%	042-272
R24	Resistor, 2.7K, 1/2W. 10%	042-272
R25	Resistor, 10K, 1/2W, 10%	042-103
R26	Resistar, 3.3K, 1/2W, 10%	042-332
R27	Resistor, 270Ω, 1/2W, 10%	042-271
R28	Potentiometer, AF Gain	052-145
R29	Potentiometer, RF Gain	052-147
R30	Resistor, 4.7Ω, 1/2W, 10%	042-479
R31	Resistor, 470Ω, 1/2W, 10%	042-471
R32	Resistor, 1.8 Ω, 2W, 5%	061-189
R33	Resistor, 1.5K, 1/2W, 10%	042-152
R34	Resistar, 33K, 1/2W, 10%	042-333
R35	Resistor, 1.5K, 1/2W, 10%	042-152
R36	Resistor, 150Ω, 1/2W, 10%	042-151
R37	Resistor, 1.5K, 1/2W, 10%	042-152
R38	Resistor, 2.2K, 1/2W, 10%	042-222

SCHEMATIC SYMBOL	DESCRIPTION	GONSET PART NUMBER
R39	Resistor, 100Ω, 1/2W, 10%	042-101
R40	Resistar, 22K, 1/2W, 10%	042-223
R41	Resistor, 22K, 1/2W, 10%	042-223
R42	Resistor, 10K, 2W, 10%	044-103
R43	Resistor, 68K, 1/2W, 10%	042-683
R44	Resistor, 33K, 1/2W, 10%	042-333
R45	Resistor, 10K, 1/2W, 10%	042-103
R46	Resistor, 680Ω, 1/2W, 10%	042-681
R47	Resistor, 1.5K, 1/2W, 10%	042-152
R48	Resistor, 68K, 1/2W, 10%	042-683
R49	Resistor, 22Ω, 1/2W, 10%	042-220
R50	Resistor, 470Ω, 1/2W, 10%	042-471
R51	Resistar, 3.9K, 1/2W, 10%	042-392
R52	Resistor, 33K, 1/2W, 10%	042-333
R53	Resistor, 2.7K, 1/2W, 10%	042-272
R54	Resistor, 470Ω, 1/2W, 10%	042-471
R55	Resistor, 22K, 1/2W, 10%	042-223
R56	Resistor, 2.2K, 1/2W, 10%	042-222
R57	Resistar, 2.7K, 1/2W, 10%	042-272
R58	Resistor, 3.9K, 1/2W, 10%	042-392
R59	Resistor, 470Ω, 1/2W, 10%	042-471
R60	Resistor, 2.7K, 1/2W, 10%	042-272
R61	Resistor, 3.9K, 1/2W, 10%	042-392
R62	Potentiameter, Bal. Mod.	052-146
R63	Resistor, 470Ω, 1/2W, 10%	042-471
R64	Resistor, 1K, 1/2W, 10%	042-102
R65	Resistor, 470Ω, 1/2W, 10%	042-471
R66	Resistor, 6.8K, 1/2W, 10%	042-682
R67	Resistor, 4.7K, 1/2W, 10%	042-472
R68	Resistor, 22K, 1/2W, 10%	042-223
R69	Resistor, 470Ω, 1/2W, 10%	042-471
R70	Resistor, 2.7K, 1/2W, 10%	042-272
R71	Resistor, 3.3K, 1/2W, 10%	042-332
R72	Resistor, 3.9K, 1/2W, 10%	042-392
R73	Resistor, 1K, 1/2W, 10%	042-102
R74	Resistor, 39K, 1/2W, 10%	042-393
R75	Resistor, 1.5K, 1/2W, 10%	042-152
R76	Resistor, 18K, 1/2W, 10%	042-183
R77	Resistor, 1.5K, 1/2W, 10%	042-152
R78	Resistor, 3.9K, 1/2W, 10%	042-392
R79	Resistor, 1K, 1/2W, 10%	042-102
R80	Resistor, 15K, 1/2W, 10%	042-153
R81	Resistor, 1K, 1/2W, 10%	042-102
R82	Resistor, 22K, 1/2W, 10%	042-223
R83	Potentiometer, 5K, Linear	051-009
R84	Resistor, 1.5K, 1/2W, 10%	042-152
R85	Resistor, 330Ω, 1/2W, 10%	042-331
R86	Resistor, 10K, 1/2W, 10%	042-103
R87	Resistor, 2.2K, 1/2W, 10%	042-222
R88	Resistor, 200Ω, 1/2W, 10%	042-201
R89	Resistor, 270Ω, 1/2W, 10%	042-271
R90	Resistor, 1.5K, 1/2W, 10%	042-152
R91	Resistor, 4.7K, 1/2W, 10%	042-472
R92	Resistor, 15K, 1/2W, 10%	042-153
R93	Resistor, 1K, 1/2W, 10%	042-102
R94	Resistor, 2.7K, 1/2W, 10%	042-272
R95	Resistor, 2K, 1/2W, 5%	046-202
R96	Resistor, 1.5K, 1/2W, 10%	042-152
R97	Resistor, 3.9K, 1/2W, 10%	042-392

PARTS LIST

SCHEMATIC SYMBOL	DESCRIPTION	GONSET PART NUMBER
C1	Capacitar, 50 pf, disc ceramic	401-500J
C2	Capacitor, 15 mfd, 15 v	422-150Z
C3	Capacitar, 500 mfd, 15 v	422-501Z
C4	Capacitar, 15 mfd, 15 v	422-150Z
C5	Capacitar, 15 mfd, 15 v	422-150Z
C6	Capacitar, 15 mfd, 15 v	422-150Z
C7	Capacitar, 15 mfd, 15 v	422-150Z
C8	Capacitar, 15 mfd, 15 v	422-150Z
C9	Capacitar, .01 mfd, disc ceramic	376-103Z
C10	Capacitar, 510 pf, DM15 mica	432-511J
C11	Capacitar, 160 pf, DM15 5%	433-161J
C12	Capacitar, .01 mfd, disc ceramic	376-103Z
C13	Capacitar, .01 mfd, disc ceramic	376-103Z
C14	Capacitar, .01 mfd, disc ceramic	376-103Z
C15	Capacitar, .01 mfd, disc ceramic	376-103Z
C16	Capacitar, 50 pf, disc ceramic	401-500J
C17	Capacitar, .01 mfd, disc ceramic	376-103Z
C18	Capacitar, .1 mfd, disc ceramic	381-104Z
C19	Capacitar, 15 mfd, 15 v	422-150Z
C20	Capacitar, 15 mfd, 15 v	422-150Z
C21	Capacitar, '5 mfd, 15 v	422-150Z
C22	Capacitar, 100 mfd, 15 v	422-101Z
C23	Capacitor, 3-12 pf, trimmer	089-041
C24	Capacitar, 250 mfd, 25 v	366-251Z
C25	Capacitar, 5-25 pf, trimmer	089-009
C26	Capacitar, 15 pf, N330	084-605
C27	Capacitar, 15 pf, N330	084-605
C28	Capacitar, 10 pf, DM15, 5%	433-100J
C29	Capacitar, 3-12 pf, trimmer	089-041
C30	Capacitar, VFO	074-160
C31(3.0PF)	Capacitar, 2 pf, DM15 mica	433-209
C32	Capacitar, 1500 pf, DM19	432-152J
C33	Capacitar, 1000 pf, DM19	432-102J
C34	Capacitar, 1000 pf, DM19	432-102J
C35	Capacitar, 1500 pf, DM19	432-152J
C36	Capacitar, 3-12 pf, trimmer	089-041
C37	Capacitar, 1500 pf, DM19	432-152J
C38	Capacitar, 1500 pf, DM19	432-152J
C39	Capacitar, 10 pf, DM15, 5%	433-100J
C40	Capacitar, 10 pf, DM15, 5%	433-100J
C41	Capacitar, 10 pf, DM15, 5%	433-100J
C42	Capacitar, 15 mfd, 15 v	422-150Z
C43	Capacitar, 39 pf, DM15	433-390J
C44	Capacitar, 50 pf, NPO, disc	401-500J
C45	Capacitar, 27 pf, DM15	433-270J
C46	Capacitar, 6.2 pf, camp	361-629J
C47	Capacitar, .005 mfd, ceramic	373-502Z
C48	Capacitar, .005 mfd, ceramic	373-502Z
C49	Capacitar, .005 mfd, ceramic	373-502Z
C50	Capacitar, 6.2 pf, camp	361-629J
C51	Capacitar, 47 pf, DM15, 5%	433-470J
C52	Capacitar, .01 mfd, disc ceramic	376-103Z
C53	Capacitar, .01 mfd, disc ceramic	376-103Z
C54	Capacitar, 130 pf, DM15, 5%	433-131J
C55	Capacitar, 15 pf, DM15, 5%	433-150J
C56	Capacitar, 47 pf, DM15, 5%	433-470J
C57	Capacitar, 20 pf, DM15, 5%	433-200J
C58	Capacitar, 100 pf, DM15, 5%	433-101J
C59	Capacitar, 20 pf, DM15, 5%	433-200J
C60	Capacitar, 10 pf, DM15, 5%	433-100J
C61	Capacitar, 50 pf, NPO	401-500J
C62	Capacitar, .001 mfd, ceramic	374-102P
C63	Capacitar, 47 pf, DM15, 5%	433-470J
C64	Capacitar, 47 pf, DM15, 5%	433-470J
C65	Capacitar, 20 pf, DM15, 5%	433-200J
C66	Capacitar, 10 pf, DM15, 5%	433-100J
C67	Capacitar, 15 pf, DM15, 5%	433-150J
C68	Capacitar, 200 pf, DM15, 5%	433-201J
C69	Capacitar, .01 mfd, ceramic	376-103Z
C70	Capacitar, 1000 pf, feed-thru	077-021
C71	Capacitar, 1000 pf, feed-thru	077-021
C72	Capacitar, 1000 pf, feed-thru	077-021
C73	Capacitar, 1000 pf, feed-thru	077-021
C74	Capacitar, 1000 pf, feed-thru	077-021
C75	Capacitar, 1000 pf, feed-thru	077-021
C76	Capacitar, 1000 pf, feed-thru	077-021
C77	Capacitar, 1000 pf, feed-thru	077-021
C78	Capacitar, 1000 pf, feed-thru	077-021
C79	Capacitar, 1000 pf, feed-thru	077-021
C80	Capacitar, 1000 pf, feed-thru	077-021
C81	Capacitar, 1000 pf, feed-thru	077-021
C82	Capacitar, 1000 pf, feed-thru	077-021
C83	Capacitar, 1000 pf, feed-thru	077-021
C84	Capacitar, 1000 pf, feed-thru	077-021
C85	Capacitar, 1000 pf, feed-thru	077-021
C86	Capacitar, 1000 pf, feed-thru	077-021
C87	Capacitar, 1000 pf, feed-thru	077-021
C88	Capacitar, 1000 pf, feed-thru	077-021
C89	Capacitar, 1000 pf, feed-thru	077-021
C90	Capacitar, 1000 pf, feed-thru	077-021
C91	Capacitar, 1000 pf, feed-thru	077-021
C92	Capacitar, 1000 pf, feed-thru	077-021
C93	Capacitar, 1000 pf, feed-thru	077-021
C94	Capacitar, 1000 pf, feed-thru	077-021
C95	Capacitar, 1000 pf, feed-thru	077-021
C96	Capacitar, 1000 pf, feed-thru	077-021
C97	Capacitar, 1000 pf, feed-thru	077-021
C98	Capacitar, 1000 pf, feed-thru	077-021
C99	Capacitar, 1000 pf, feed-thru	077-021
C100	Capacitar, 390 pf, DM15	433-391J
C101	Capacitar, 390 pf, DM15	433-391J
C102	Capacitar, 390 pf, DM15	433-391J
C103	Capacitar, 27 pf, DM15	433-270J
C104	Capacitar, 2.7 pf, QC type	361-279
C105	Capacitar, 20 pf, DM15, 5%	433-200J
C106	Capacitar, 390 pf, DM15	433-391J
C107	Capacitar, 390 pf, DM15	433-391J
C108	Capacitar, 68 pf, DM15, 5%	433-680J
C109	Capacitar, 390 pf, DM15	433-391J
C110	Capacitar, 390 pf, DM15	433-391J
C111	Capacitar, 4-40 pf, trimmer	089-005
C112	Capacitar, tank	074-158
C113	Capacitor, antenna	074-159
C114	Capacitar, 390 pf, DM15	433-391J
C115	Capacitar, 390 pf, DM15	433-391J
C116	Capacitar, 50 pf, disc ceramic	401-500J
C117	Capacitar, 20 pf, DM15, 5%	433-200J
C118	Capacitor, 20 pf, DM15, 5%	433-200J

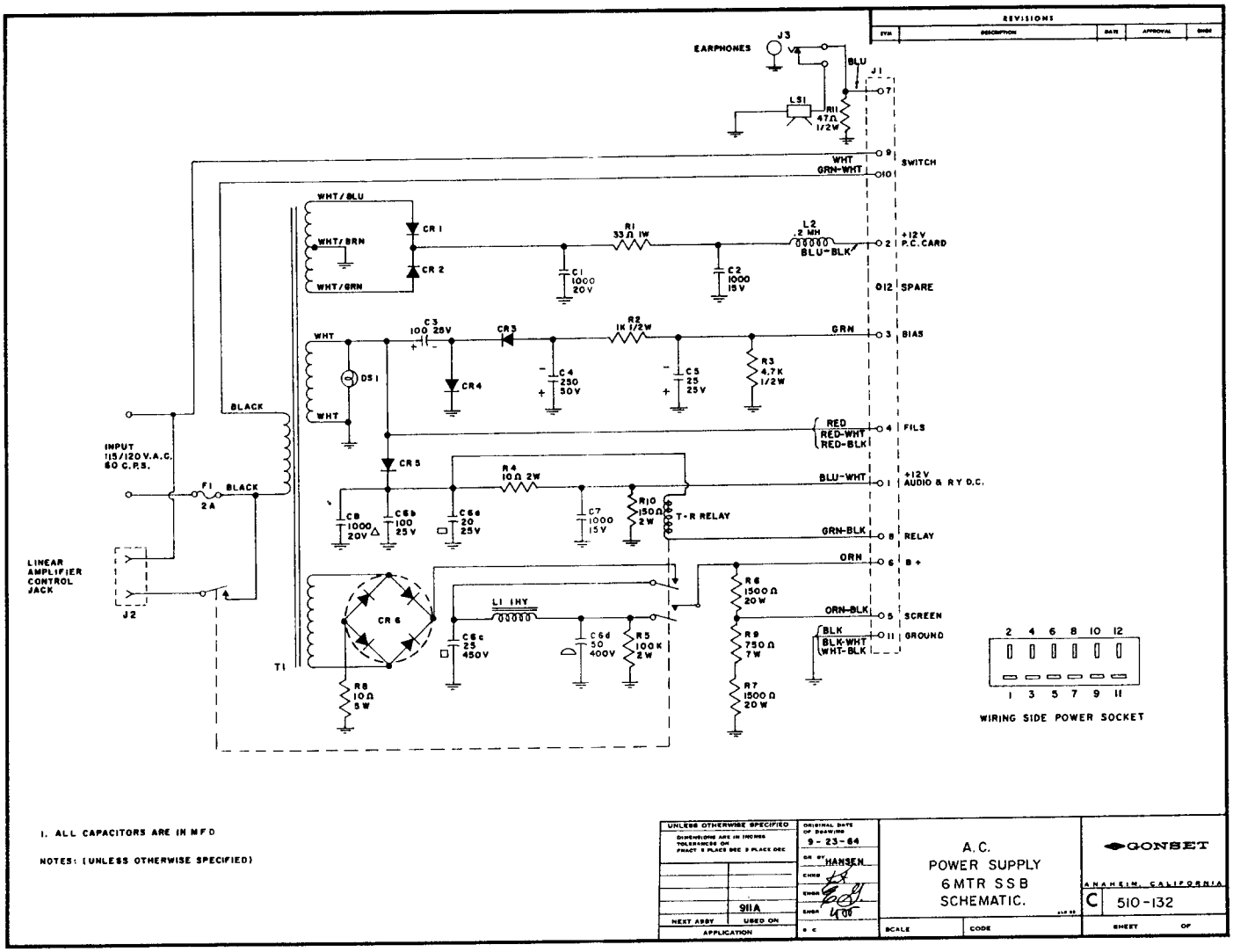

PARTS LIST

SCHEMATIC SYMBOL	DESCRIPTION	GONSET PART NUMBER
R1	Resistor, 33Ω, 10%, 1 W	043-330
R2	Resistor, 1000Ω, 10%, 1/2 W	042-102
R3	Resistor, 4700Ω, 10%, 1/2 W	042-472
R4	Resistor, 10Ω, 10%, 2W	044-100
R5	Resistor, 100 K Ω, 10%, 2 W	044-104
R6	Resistor, 1500Ω, 20 W	049-095
R7	Resistor, 1500Ω, 20 W	049-095
R8	Resistor, 10Ω, 10%,5 W	049-092
R9	Resistor, 750Ω, 7 W	049-107
R10	Resistor, 150Ω, 2 W	044-151
R11	Resistor, 47Ω, 1/2 W	042-470
C1	Capacitor, 1000 mfd, 20 v	073-169
C2	Capacitor, 1000 mfd, 15 v	365-102Z
C3	Capacitor, 100 mfd, 25 v	366-101P
C4	Capacitor, 250 mfd, 50 v	367-251Z
C5	Capacitor, 25 mfd, 25 v	366-250
C6	Capacitor, 50 mfd, 400 v 25 mfd, 450 v 100 mfd, 25 v 20 mfd, 25 v	073-154
C7	Capacitar, 1000 mf,d, 15 v	365-102Z
C8	Capacitor, 1000 mfd, 20 v	073-169

SCHEMATIC SYMBOL	DESCRIPTION	GONSET PART NUMBER
T1	Transformer, power	271-089
L1	Choke, filter	274-025
L2	RF Choke, 200 uh	027-017
LS1	Loudspeaker	152-023
K1	Relay	111-091
CR1	Diode, 50 piv	474-004-1
CR2	Diode, 50 piv	474-004-1
CR3	Diode, 50 piv	474-004-1
CR4	Diode, 50 piv	474-004-1
CR5	Diode, 50 piv	474-004-1
CR6	Diode bridge	474-026
J1	Connector, 12 contact	344-172
J2	AC Receptacle	344-023
J3	Phone jack	342-001
F1	Fuse, 2 ampere, 250 v	482-049
DS1	Dial lamp, #1815	471-004
	Power Cord	696-016

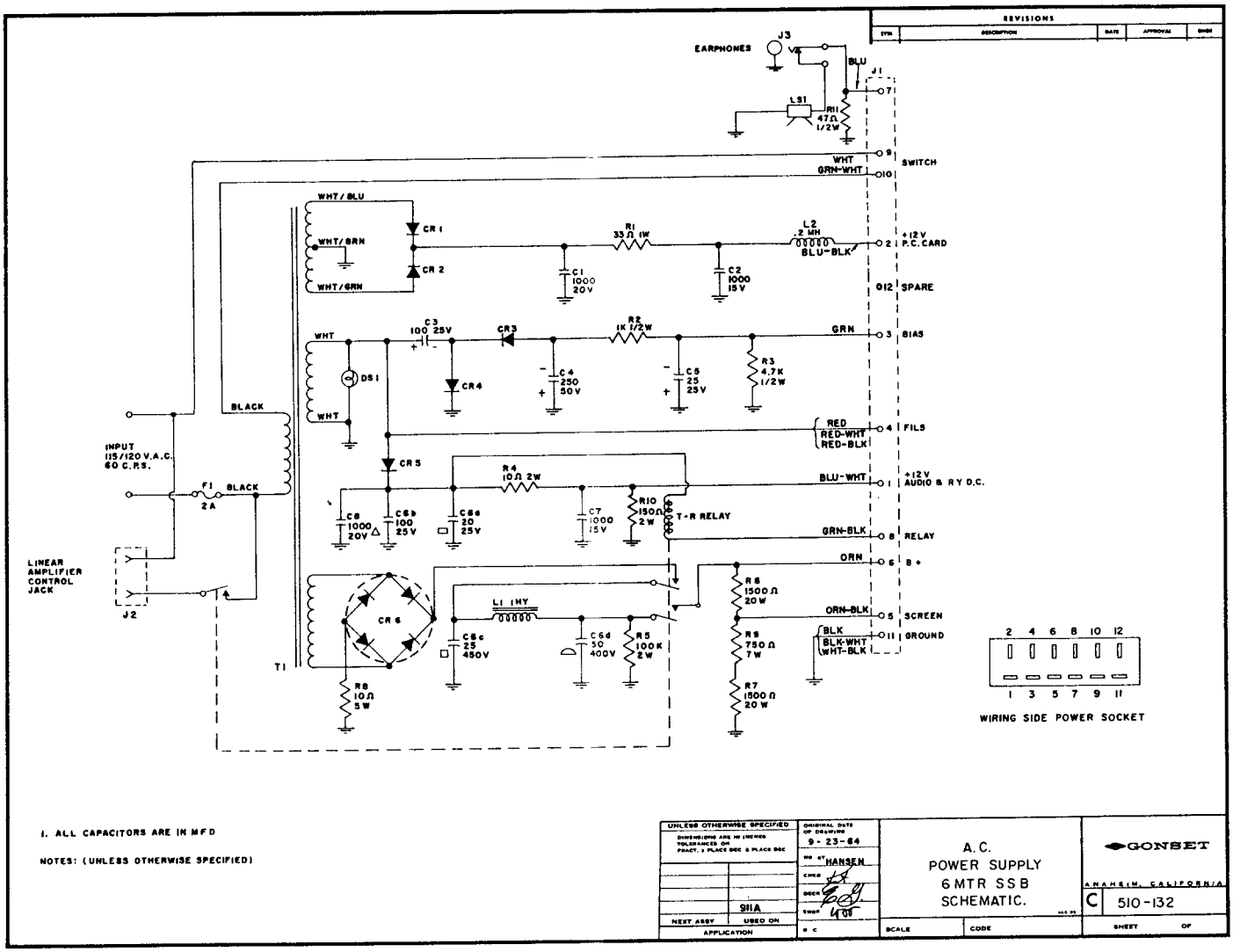

PARTS LIST

SCHEMATIC SYMBOL	DESCRIPTION	GONSET PART NUMBER
R1	Resistor, 33Ω, 10%, 1 W	043-330
R2	Resistor, 1000Ω, 10%, 1/2 W	042-102
R3	Resistor, 4700Ω, 10%, 1/2 W	042-472
R4	Resistor, 10Ω, 10%, 2W	044-100
R5	Resistor, 100 K Ω, 10%, 2 W	044-104
R6	Resistor, 1500Ω, 20 W	049-095
R7	Resistor, 1500Ω, 20 W	049-095
R8	Resistor, 10Ω, 10%, 5 W	049-092
R9	Resistor, 750Ω, 7 W	049-107
R10	Resistor, 150Ω, 2 W	044-151
R11	Resistor, 47Ω, 1/2 W	042-470
C1	Capacitor, 1000 mfd, 20 v	073-169
C2	Capacitor, 1000 mfd, 15 v	365-102Z
C3	Capacitor, 100 mfd, 25 v	366-101P
C4	Capocitor, 250 mfd, 50 v	367-251Z
C5	Capacitor, 25 mfd, 25 v	366-250
C6	Capacitor, 50 mfd, 400 v 25 mfd, 450 v 100 mfd, 25 v 20 mfd, 25 v	073-154
C7	Capacitor, 1000 mf,d, 15 v	365-102Z
C8	Capacitor, 1000 mfd, 20 v	073-169

SCHEMATIC SYMBOL	DESCRIPTION	GONSET PART NUMBER
T1	Transformer, power	271-089
L1	Choke, filter	274-025
L2	RF Choke, 200 uh	027-017
LS1	Loudspeaker	152-023
K1	Reloy	111-091
CR1	Diode, 50 piv	474-004-1
CR2	Diode, 50 piv	474-004-1
CR3	Diode, 50 piv	474-004-1
CR4	Diode, 50 piv	474-004-1
CR5	Diode, 50 piv	474-004-1
CR6	Diode bridge	474-026
J1	Connector, 12 contact	344-172
J2	AC Receptacle	344-023
J3	Phone jack	342-001
F1	Fuse, 2 ampere, 250 v	482-049
DS1	Dial lamp, #1815	471-004
	Power Cord	696-016

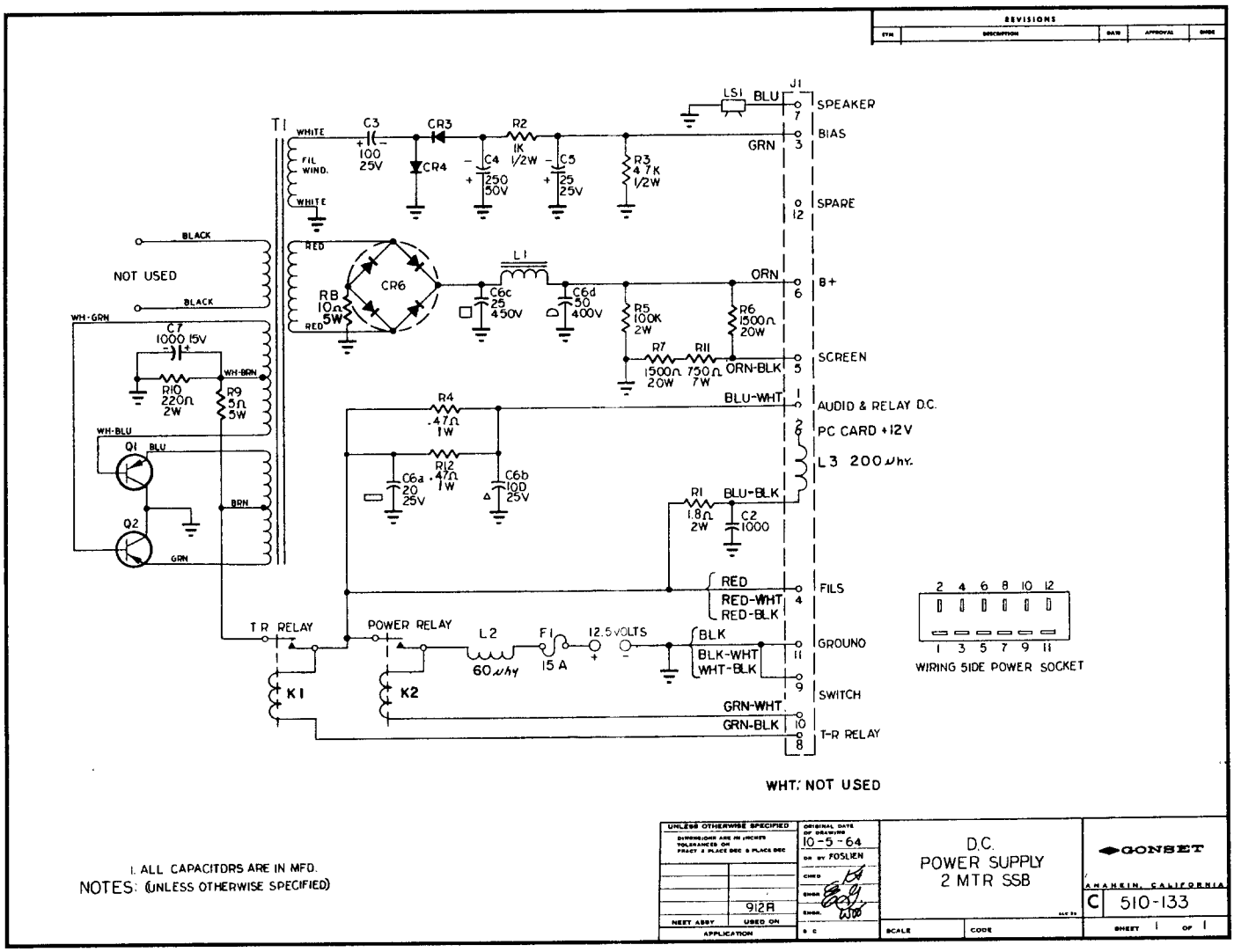

PARTS LIST

SCHEMATIC SYMBOL	DESCRIPTION	GONSET PART NUMBER
R1	Resistor, 1.8Ω, 10%, 2 W	061-189
R2	Resistor, 1000Ω, 10%, 1/2 W	042-102
R3	Resistor, 4700Ω, 10%, 1/2 W	042-472
R4	Resistor, .47Ω, 10%, 1 W	056-478
R5	Resistor, 100K Ω, 10%	044-104
R6	Resistor, 1500Ω, 20 W	049-095
R7	Resistor, 1500Ω, 20 W	049-095
R8	Resistor, 10Ω, 10%, 5 W	049-092
R9	Resistor, 5Ω, 5 W	049-100
R10	Resistor, 220Ω, 10%, 2 W	044-221
R11	Resistor, 750Ω, 7 W	049-107
R12	Resistor, .47Ω, 10%, 1 W	056-478
C2	Capacitor, 1000 mfd, 15 v	365-102Z
C3	Capacitor, 100 mfd, 25 v	366-101P
C4	Capacitor, 250 mfd, 50 v	367-251Z
C5	Capacitor, 25 mfd, 25 v	366-250
C6	Capacitor, 50 mfd, 400 v	073-154
	25 mfd, 450 v	
	100 mfd, 25 v	
	20 mfd, 25 v	
C7	Capacitor, 1000 mfd, 15 v	365-102Z

SCHEMATIC SYMBOL	DESCRIPTION	GONSET PART NUMBER
T1	Transformer, power	271-089
L1	Choke, filter	274-025
L2	Hash filter, 60 uh	027-027
L3	RF chake, 200 uh	027-017
Q1	Transistor,	476-006
Q2	Transistor	476-006
CR3	Diode, 50 piv	474-004
CR4	Diode, 50 piv	474-004
CR6	Diode bridge	474-026
LS1	Loudspeaker	152-023
K1	Relay	111-120
K2	Relay	111-120
F1	Fuse, 15 Ampere, 32 v	484-041
J1	Receptacle	344-172

WARRANTY POLICY

Gonset, Inc., warrants this equipment, when praperly registered, against defects in warkmanship, materials, and canstructian under narmal use and service — in accardance with the warranty card furnished. Under this warranty, aur abligation is limited ta repairing ar replacing any defective parts.

This warranty is valid anly when the enclased card is praperly filled in and returned within ten (10) days fram purchase date. This waranty shall nat apply ta any equipment which has been tampered with in any way, ar which has been misused or damaged by accident ar negligence, ar which has had the serial number remaved, altered, ar effaced.

Ganset, Inc., reserves the right ta discantinue ar change, at any time, specificatians, design, or prices withaut natice and withaut incurring obligatians.

DO NOT SEND EQUIPMENT TO THE FACTORY WITHOUT FIRST SECURING AUTHORIZATION TO DO SO; EQUIPMENT SHOULD BE SENT ONLY TO AUTHORIZED REPAIR STATIONS, UNLESS OTHERWISE DIRECTED. THIS WARRANTY DOES NOT INCLUDE TRANSPORTATION COSTS TO AND FROM THE FACTORY.

2 METER–6 METER RF POWER AMPLIFIERS

SPECIFICATIONS:

	903A	913A
FREQUENCY RANGE:	144 to 148 mc (2 meters)	50 to 54 mc (6 meters)
POWER INPUT TO AMPLIFIER:	500 watts (PEP, SSB) 500 watts CW 500 watts AM (peak) 500 watts FM	500 watts (PEP, SSB) 500 watts CW 500 watts AM (peak) 500 watts FM
POWER TUBE:	4X150A (The 4X250B or the 7580 may be used.)	4X150A (The 4X250B or the 7580 may be used.)
MINIMUM EXCITER OUTPUT REQUIRED FOR FULL POWER OUTPUT: (Class AB_1 operation)	5 watts	5 watts
OUTPUT IMPEDANCE:	50 ohms, nominal	50 ohms, nominal
INPUT IMPEDANCE:	50/75 ohms, nominal	50/75 ohms, nominal
FINISH:	Light Grey Baked Enamel	Light Grey Baked Enamel
WEIGHT:	60 lbs.	60 lbs.
DIMENSIONS:	8-1/2" high x 12-5/8" wide x 17-5/16" deep.	8-1/2" high x 12-5/8" wide x 17-5/16" deep.

On special order, rf amplifiers to cover any segment of the frequency range from 1.6 to 500 megacycles are available. When ordering; specify frequency, mode of operation, and conditions of operation. Fungus-proofing is also available on special order for amplifiers that will be used in tropical regions. Attenuators are available in 5, 10, and 15 db.

ADDENDUM TO THE MODEL 910A SIDEWINDER, MANUAL #520-793

The following information is added on the basis of field experience and customer questions concerning the 910A Sidewinder:

The easiest way to turn the Crystal-VFO switch is to grasp the switch lever and the incremental tuning knob together and turn them both. As this switch is not normally used during a QSO, the slight change in incremental tuning should be of no consequence. Be sure to avoid forcing the end-stops of the incremental tuning knob when you do this, by turning the knob fully left, before turning the knob and switch to the right, and vice versa. (This sounds complicated, but you will find it is much quicker and easier to do than to describe.)

If the 910A Sidewinder is operated at full gain, SSB mode, antenna disconnected, two or three "birds" (beat notes produced when the receiver is tuned) will be noticed on each band segment. These are a normal consequence of VFO harmonics passing through the six meter band and being picked up at the antenna input. While "birds" are unavoidable in a six meter receiver of this type, care has been taken to hold them to a level such that they produce less response than a one microvolt signal. Where possible, the frequency scheme of the Sidewinder has been adjusted so that "birds" fall at the end of the band segments and may thus be avoided. For instance, the response at 51.0 on segment two may be avoided by operating at the equivalent frequency on segment one. The strongest "bird" occurs at slightly below 54.00 mcs and serves to mark the highest recommended operating frequency within the dial accuracy of the Sidewinder.

Normally, when the antenna is connected, the additional shielding of the input jack by the coaxial cable, plus the background noise derived from the antenna, combine to make "bird" response difficult or impossible to detect.

The low pass filter on the Sidewinder has been designed to reduce television cross-modulation of the Sidewinder RF stage, and attenuate Sidewinder harmonics falling within the television channels, to the greatest extent possible while still allowing operation over the entire six meter band. It is not possible to construct a filter which will have no appreciable attenuation within six meters and yet high attenuation within the immediately adjacent channel two.

In areas where the lower TV channels are extremely strong, and produce receiver cross-modulation, or extremely weak, such that TVI might be experienced, a sharp cut-off low pass filter such as the R.L. Drake TV-100-LP is recommended. These filters achieve high television attenuation by sacrificing operation over part of the six meter band. In the case of the Drake filter, operation above 52.00 mc will not be possible, but any problem which existed in the lower half of the band should be eliminated.

ADDENDUM TO THE MODEL 910A SIDEWINDER, (contd)

The following changes should be made in your model 910A schematic:

C31 is now 3.0 pf. (PN 433-309)
Capacitor C144, 10 pf, PN 433-100J, is added across L21.
Resistor R105, 27Ω, PN 042-370, is connected between the cold end of L21 & C86.
A second coil, L37, PN 012-637, is added to the HF oscillator. This coil and a 10 pf capacitor, PN 433-100J, are connected in series between the emitter and the base of Q18. The adjustment of this coil is locked at the factory and should not be changed.
L3 is connected across R70, not R71.
Resistor R104, 680Ω, PN 042-681, is connected in series with the output cable of the high frequency oscillator.
C63 is now 20 pf, (PN 433-200J).
R48 is now 220Ω, (PN 042-221).
L18 has been replaced by a 12 micro-henry choke, PN 027-052.
Capacitor C139, 390 pf, PN 433-391J, has been added from the emitter of Q3 to ground.
RF chokes L32, L33, and L34 are added in series with the connections to pins 1, 2, and 3 of the main printed circuit card, and in series with the connection to C78. These chokes are 8.2 micro-henry, PN 027-079.

Capacitor C143, 390 pf, PN 433-391J, is added in series with the connections to J8.
Capacitor C140, 15 pf, PN 433-150J, is added in series with the connection to J19.
R99 is now 1000Ω, PN 042-102.
R67 is now 3.6KΩ, ±5%, PN 046-362.
C1 is now 0.2 mfd, PN 381-204Z.

. . . . . .

The following network is added in series with the connection to J7:

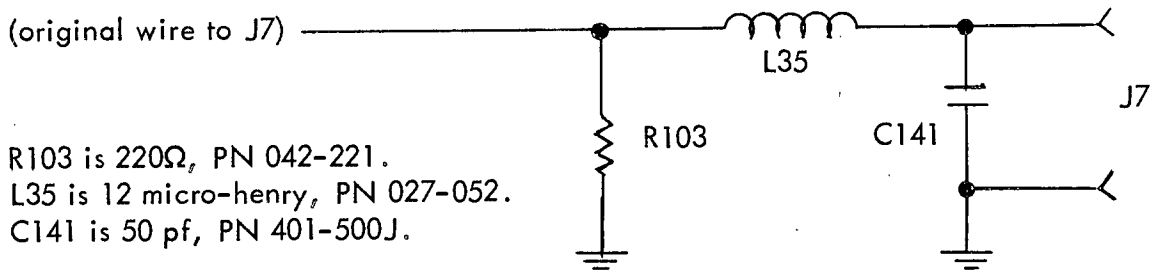

R103 is 220Ω, PN 042-221.
L35 is 12 micro-henry, PN 027-052.
C141 is 50 pf, PN 401-500J.

GONSET, INC.

A Subsidiary of LTV Ling Altec, Inc.
1515 South Manchester Avenue, Anaheim, California

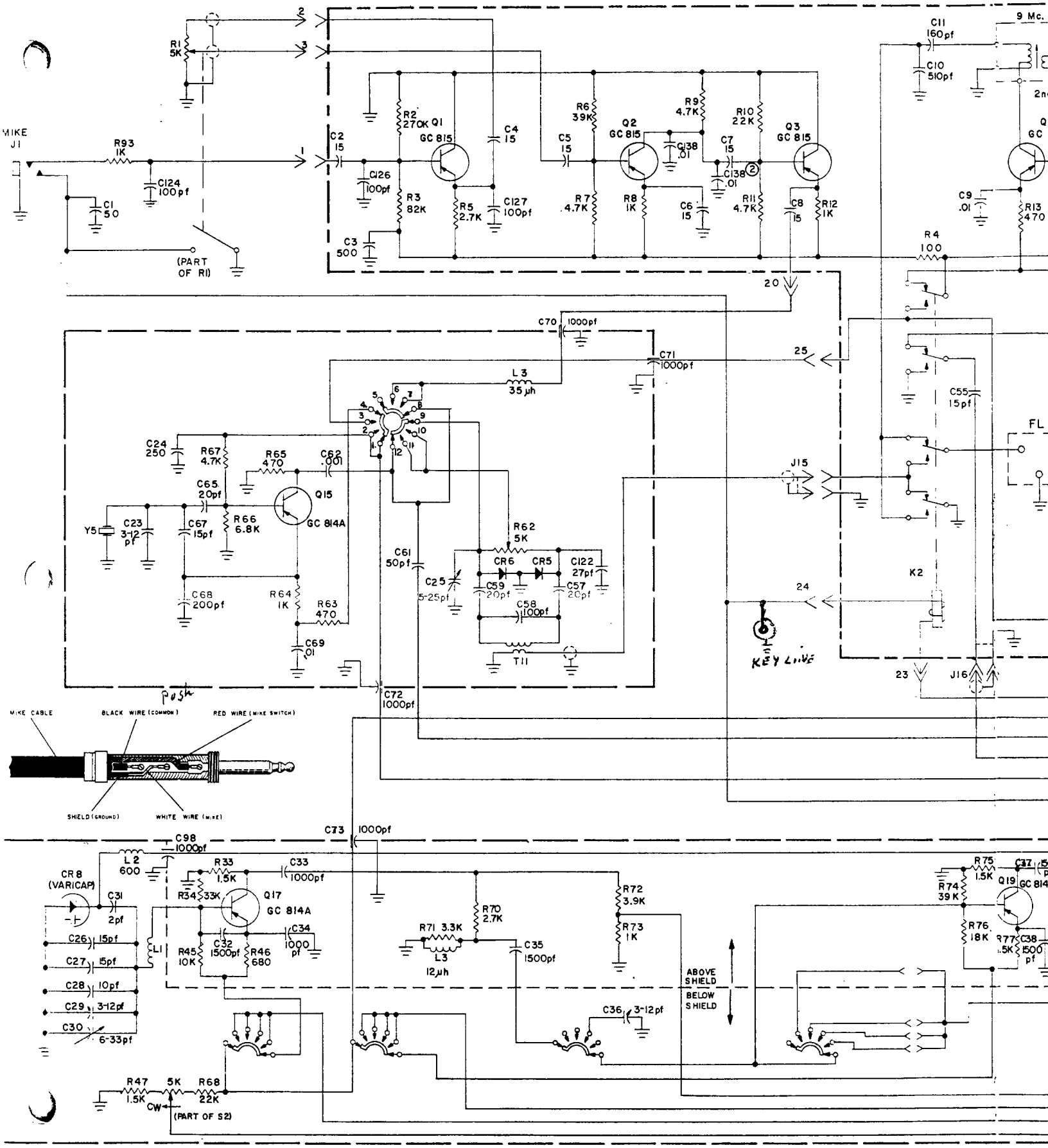
MIKE J1
R93 1K
C124 100pf
C1 50
(PART OF R1)
R1 5K
2
3
1
C2 15
R2 270K
Q1 GC 815
C4 15
C126 100pf
R3 82K
R5 2.7K
C127 100pf
C3 500
R6 39K
C5 15
R7 4.7K
Q2 GC 815
R9 4.7K
C138 .01
R8 1K
C6 15
R10 22K
C7 15
C138 .01
R11 4.7K
Q3 GC 815
C8 15
R12 1K
C11 160pf
C10 510pf
9 Mc.
C9 .01
R13 470
R4 100
20
C70 1000pf
C71 1000pf
25
L3 35 µh
C55 15pf
FL
J15
C24 250
R67 4.7K
R65 470
C62 .001
C65 20pf
Q15 GC 814A
Y5
C23 3-12 pf
C67 15pf
R66 6.8K
C68 200pf
R64 1K
R63 470
C69 .01
R62 5K
C61 50pf
C25 5-25pf
CR6
CR5
C122 27pf
C59 20pf
C57 20pf
C58 100pf
T11
K2
24
KEY LINE
23
J16
C72 1000pf
MIKE CABLE
BLACK WIRE (COMMON)
RED WIRE (MIKE SWITCH)
SHIELD (GROUND)
WHITE WIRE (MIKE)
C73 1000pf
C98 1000pf
L2 600
CR8 (VARICAP)
C31 2pf
C26 15pf
C27 15pf
C28 10pf
C29 3-12pf
C30 6-33pf
L1
R33 1.5K
C33 1000pf
R34 33K
Q17 GC 814A
R45 10K
C32 1500pf
R46 680
C34 1000 pf
R71 3.3K
L3 12µh
R70 2.7K
C35 1500pf
R72 3.9K
R73 1K
ABOVE SHIELD
BELOW SHIELD
C36 3-12pf
R75 1.5K
C37
R74 39K
Q19 GC 814
R76 18K
R77 1.5K
C38 1500 pf
R47 1.5K
5K
R68 22K
CW
(PART OF S2)

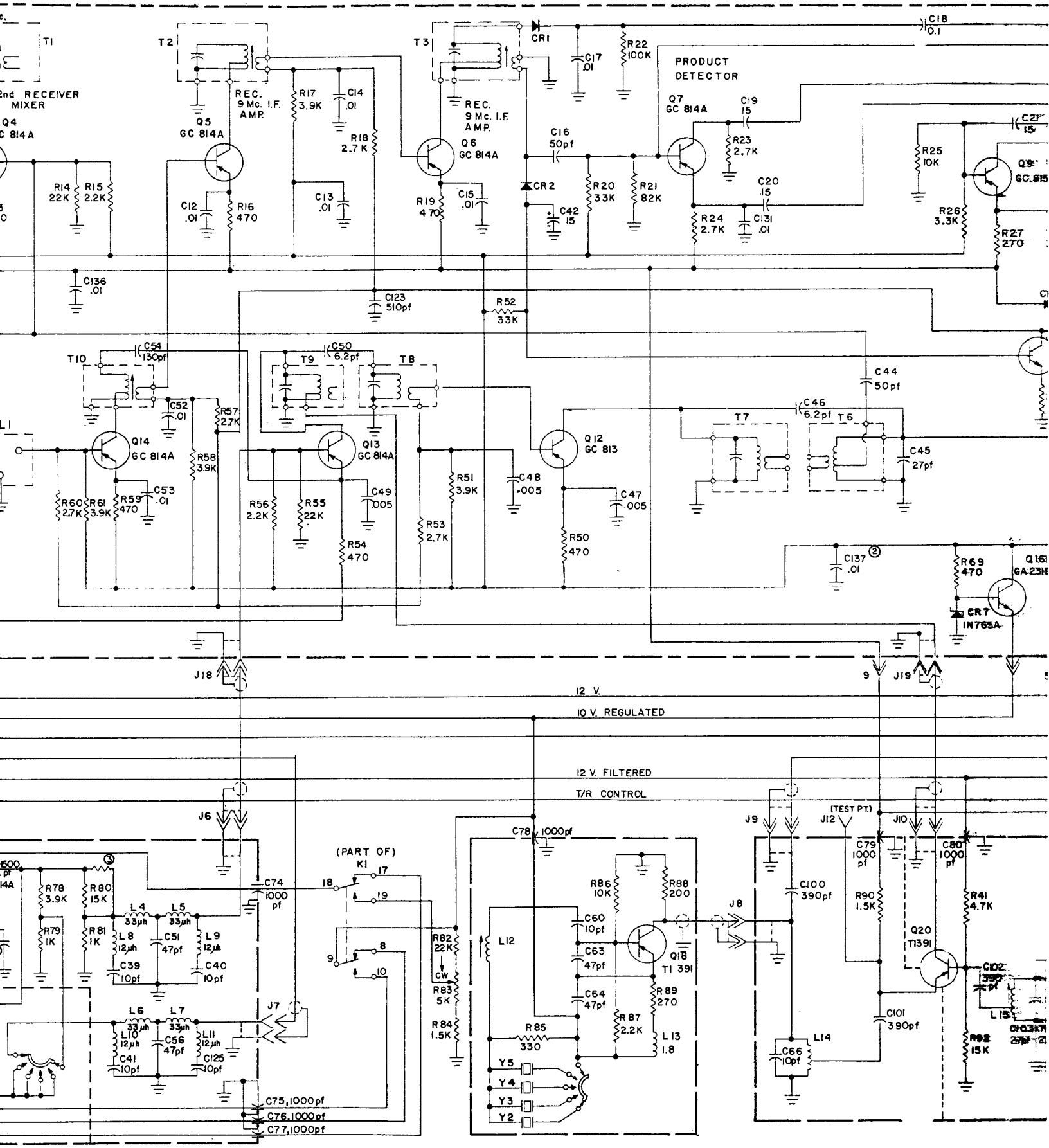
T1
2nd RECEIVER MIXER
Q4 GC 814A
T2
REC. 9 Mc. I.F. AMP.
Q5 GC 814A
R14 22K
R15 2.2K
R16 470
R17 3.9K
R18 2.7 K
C12 .01
C13 .01
C14 .01
T3
REC. 9 Mc. I.F. AMP.
Q6 GC 814A
R19 470
C15 .01
CR1
C16 50pf
CR2
C17 .01
R20 33K
R21 82K
C42 15
R22 100K
PRODUCT DETECTOR
Q7 GC 814A
C19 15
R23 2.7K
C20 .15
R24 2.7K
C131 .01
C18 0.1
C21 15
R25 10K
Q9 GC 815
R26 3.3K
R27 270
C136 .01
C123 510pf
R52 33K
T10
C54 130pf
C52 .01
R57 2.7K
T9
C50 6.2pf
T8
Q14 GC 814A
R58 3.9K
R60 2.7K
R61 3.9K
R59 470
C53 .01
Q13 GC 814A
R56 2.2K
R55 22K
C49 .005
R54 470
R51 3.9K
C48 .005
R53 2.7K
Q12 GC 813
R50 470
C47 .005
C44 50pf
C46 6.2pf
T7
T6
C45 27pf
C137 .01
R69 470
CR7 IN765A
J18
J19
12 V.
10 V. REGULATED
12 V. FILTERED
T/R CONTROL
J6
J7
J8
J9
J10
J12
(TEST PT.)
(PART OF) K1
C74 1000 pf
C78 1000pf
R78 3.9K
R80 15K
R79 1K
R81 1K
L4 33µh
L5 33µh
L8 12µh
C51 47pf
L9 12µh
C39 10pf
C40 10pf
L6 33µh
L7 33µh
L10 12µh
C56 47pf
L11 12µh
C41 10pf
C125 10pf
C75, 1000pf
C76, 1000pf
C77, 1000pf
R82 22K CW
R83 5K
R84 1.5K
L12
R86 10K
R88 200
C60 10pf
C63 47pf
Q18 T1 391
C64 47pf
R89 270
R85 330
R87 2.2K
L13 1.8
Y5
Y4
Y3
Y2
C100 390pf
C79 1000 pf
C80 1000 pf
R90 1.5K
R41 4.7K
Q20 T1391
C102 390 pf
C101 390pf
L14
C66 10pf
L15
R92 15K

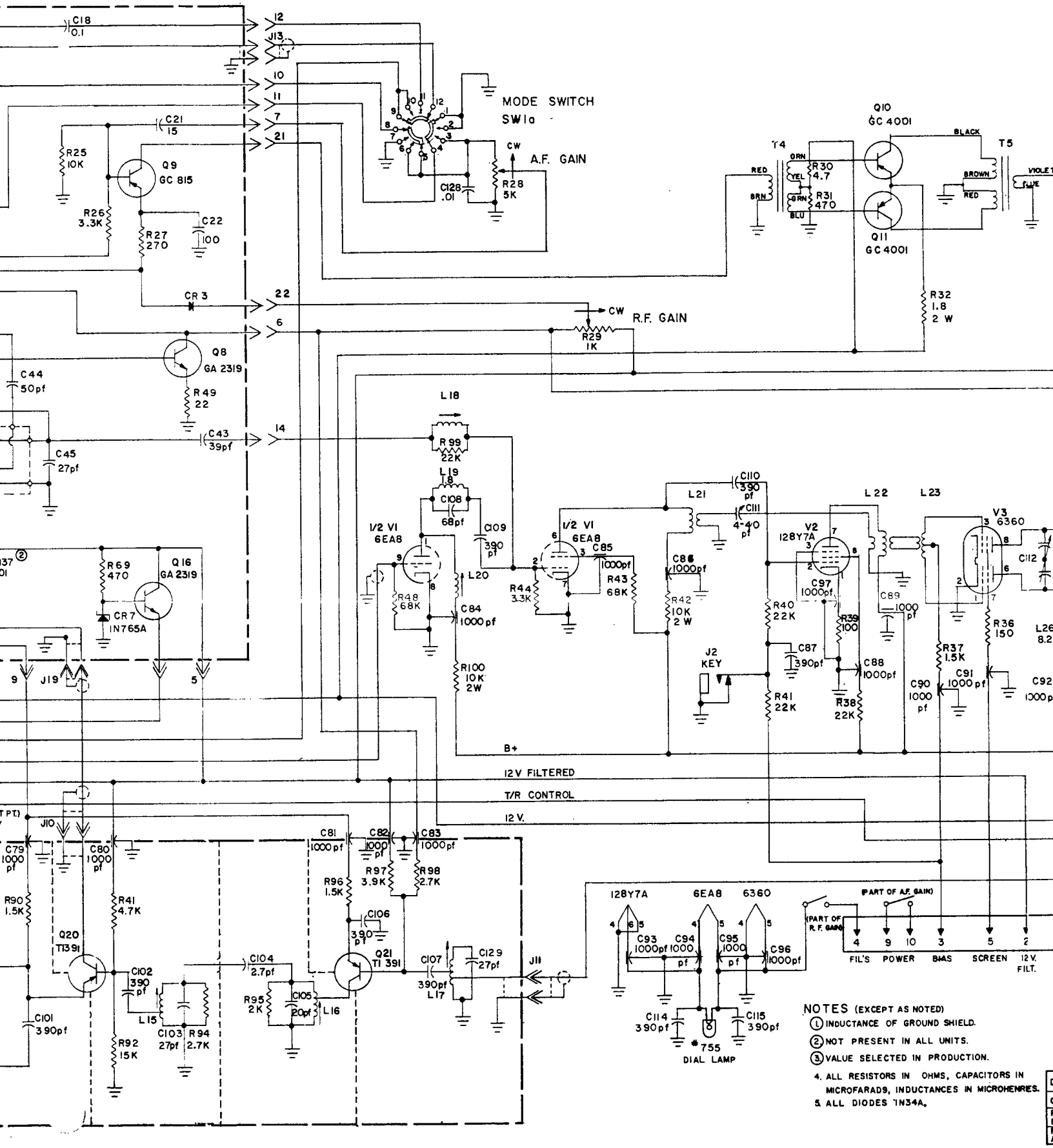

NOTES (EXCEPT AS NOTED)

1. INDUCTANCE OF GROUND SHIELD.
2. NOT PRESENT IN ALL UNITS.
3. VALUE SELECTED IN PRODUCTION.
4. ALL RESISTORS IN OHMS, CAPACITORS IN MICROFARADS, INDUCTANCES IN MICROHENRES.
5. ALL DIODES 1N34A.

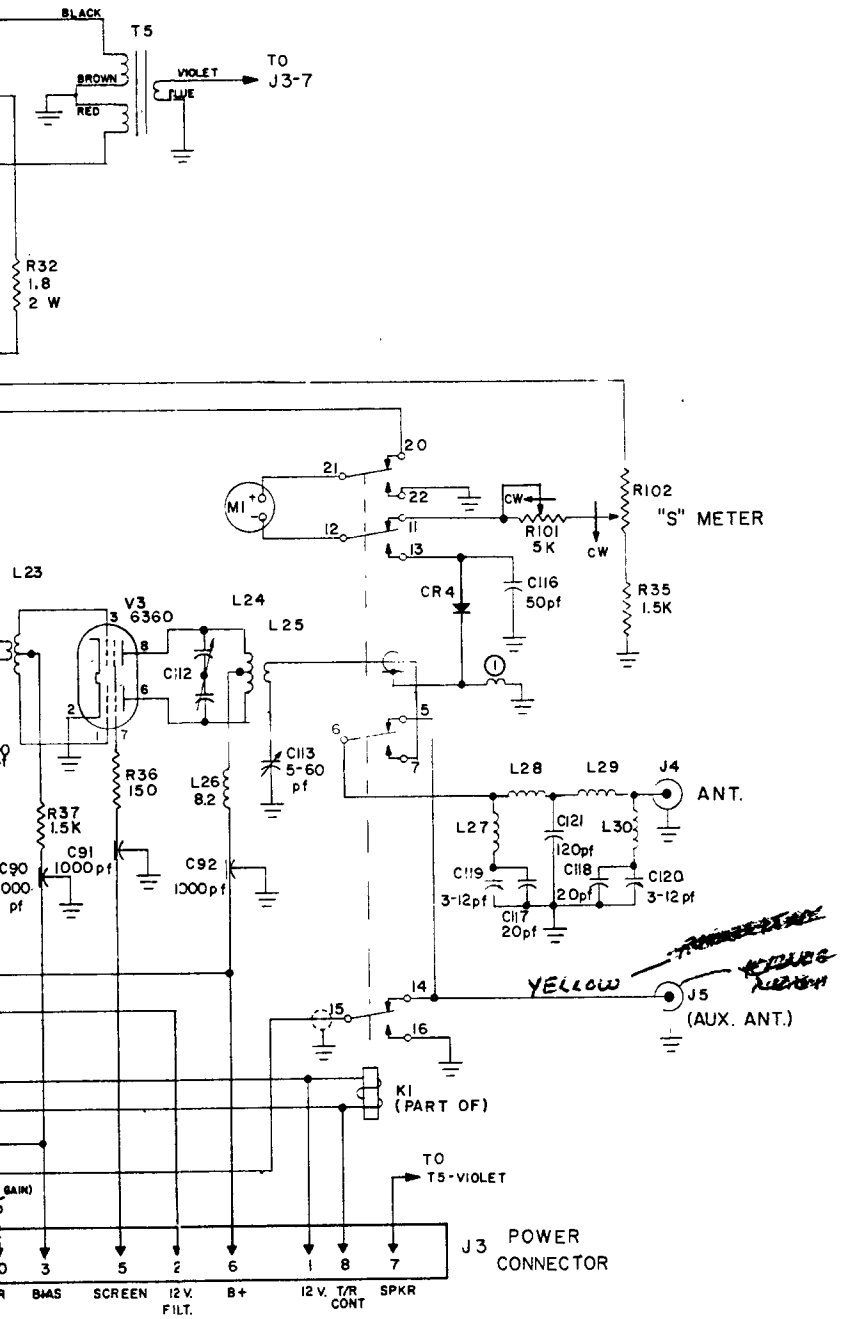

NOTED)
ROUND SHIELD.
ALL UNITS.
IN PRODUCTION.
OHMS, CAPACITORS IN
UCTANCES IN MICROHENRES.
4A.

DRN BY	BUD NEWMAN	2/64	SCHEMATIC SIX METER SSB SIDEWINDER
CHK BY			
PROJ ENG			
FINAL APR			

GONSET

510-135 REV